Considerations on Power and Particle Handling in Compact Stellarators

Peter Mioduszewski

NCSX Project Meeting
Oak Ridge National Laboratory

May 5-6, 1999

Philosophy for Power and Particle Handling in NCSX and QOS

- **The main mission of NCSX is to explore transport and high beta in compact stellarator configurations -- it is NOT to develop divertors or other power and particle handling schemes!**
- **However, Power and Particle Handling are needed to the extent that they support the main mission.**
- **Particle Handling: exploring transport and stability in NCSX requires high plasma performance, which is usually achieved through control of neutrals (recycling) and impurities.**
- **Power Handling: is an issue to the extent that excessive heat loads need to be prevented, i.e. heat loads which could (1) jeopardize the integrity of the containment structures or (2) generate intolerable amounts of impurities.**

Plasma Boundary Topologies in Stellarators

- **Stellarator boundary layers, in general, don't have an ordered magnetic field-line structure outside the last closed flux surface (LCFS) like axisymmetric tokamaks.**

- **They are more complex than tokamak boundary layers and can be combinations of stochastic/ergodic layers, single or chains of islands, and laminar layers near the coils.**

- **Due to the helical symmetry, stellarator boundaries require 3-D models for magnetic field, plasma, and neutrals transport.**

- **The individual features of the NCSX boundary layer need to be taken into account in the design of the vacuum vessel and plasma-facing components.**

Plasma Boundary in LHD: Local Island Divertor

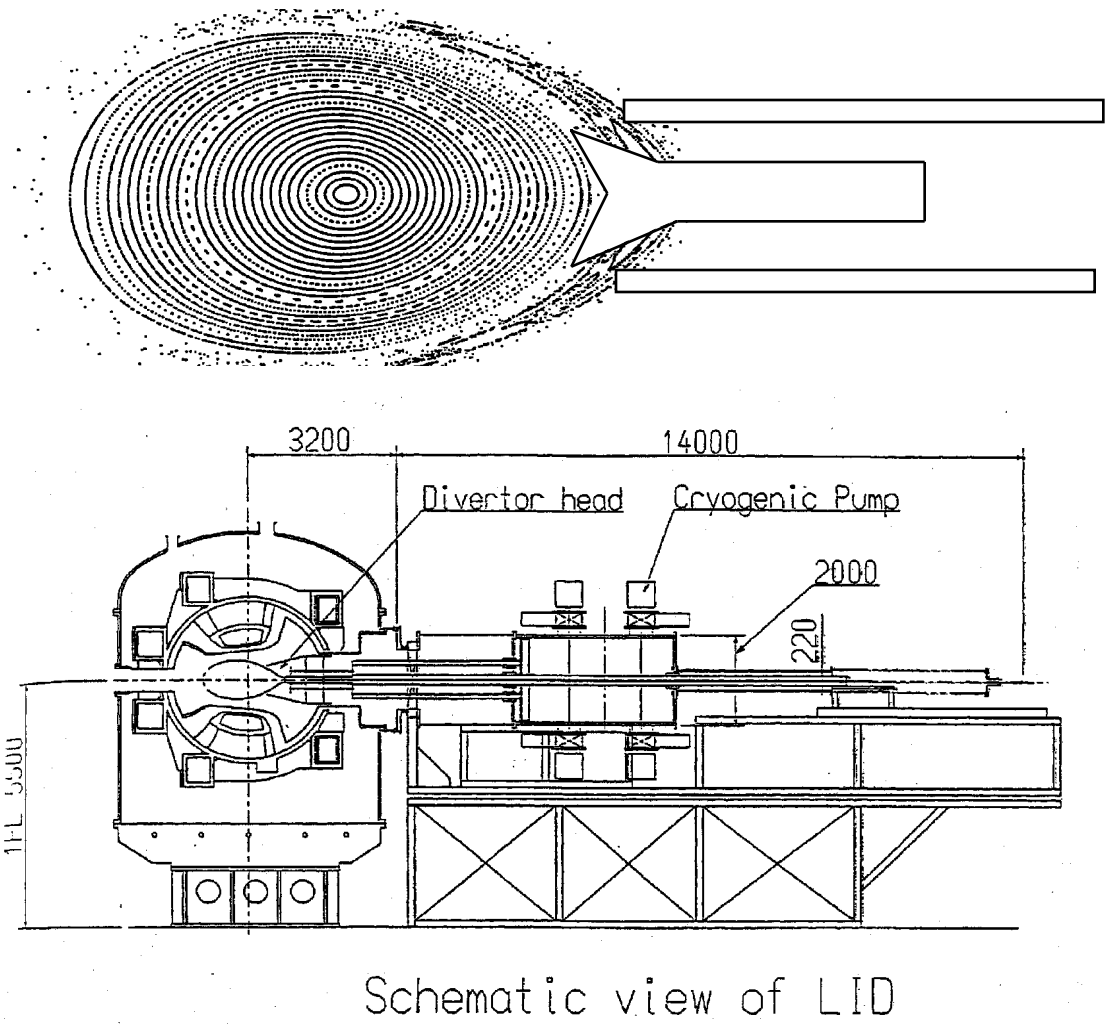

Density Control with Local Island Divertor has been Demonstrated in CHS

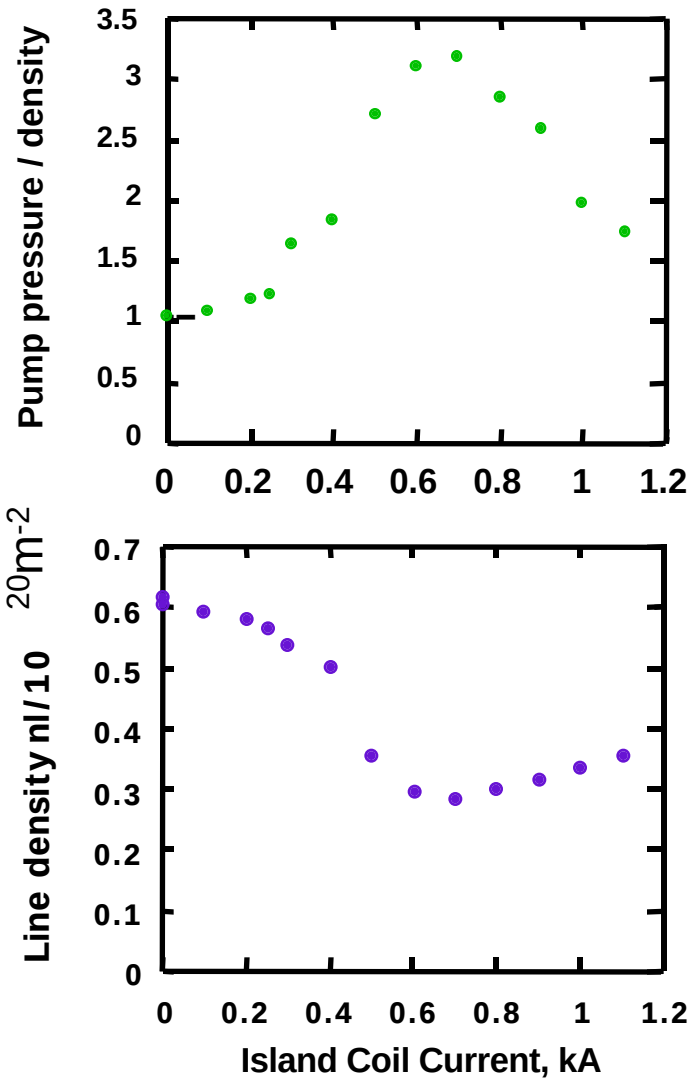

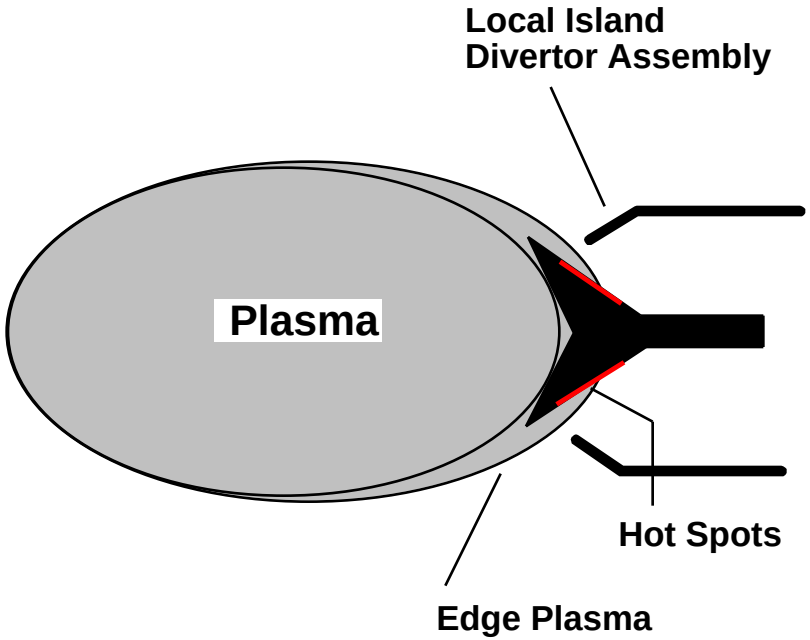

Plasma Boundary in LHD: Helical Divertor

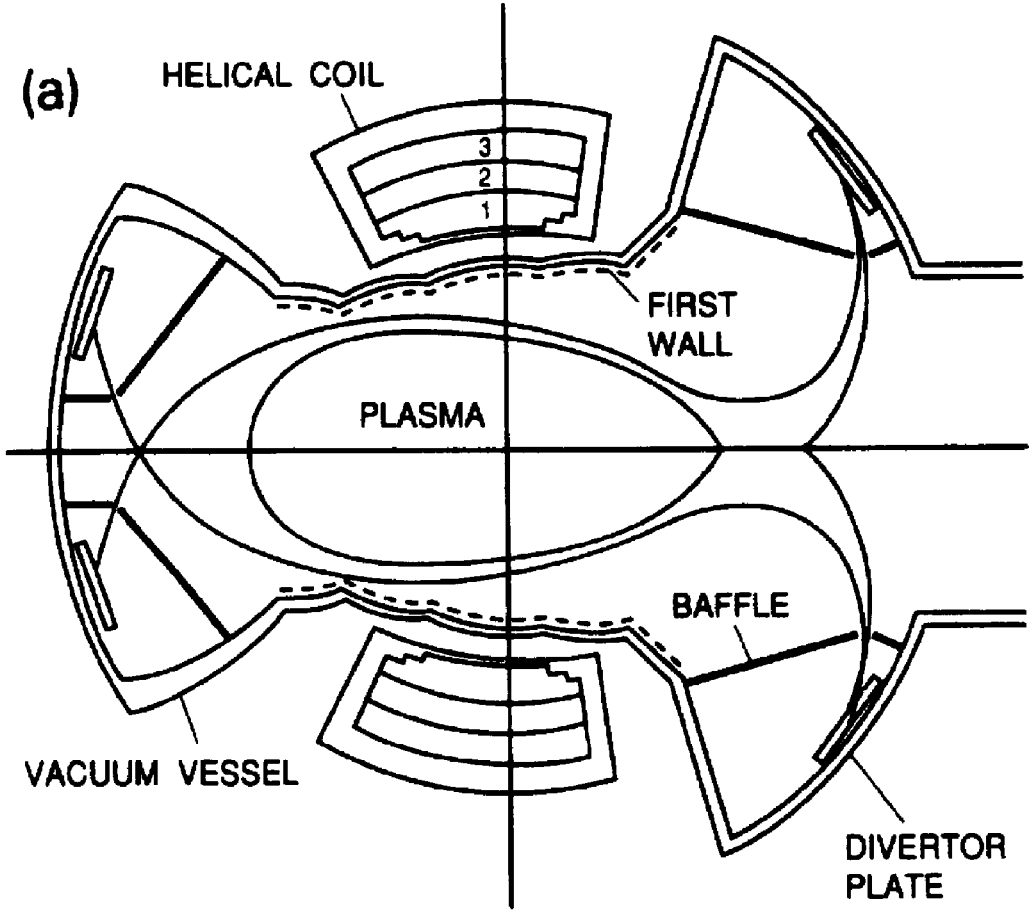

Wendelstein 7-AS Symmetric Limiter/Divertor System

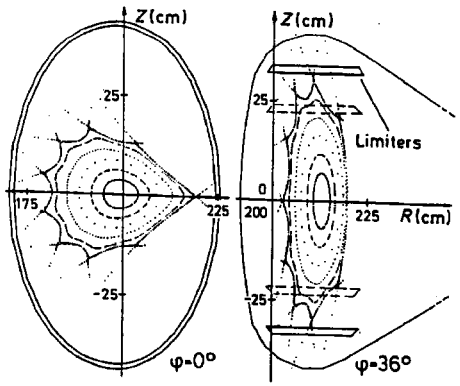

original rail limiter configuration

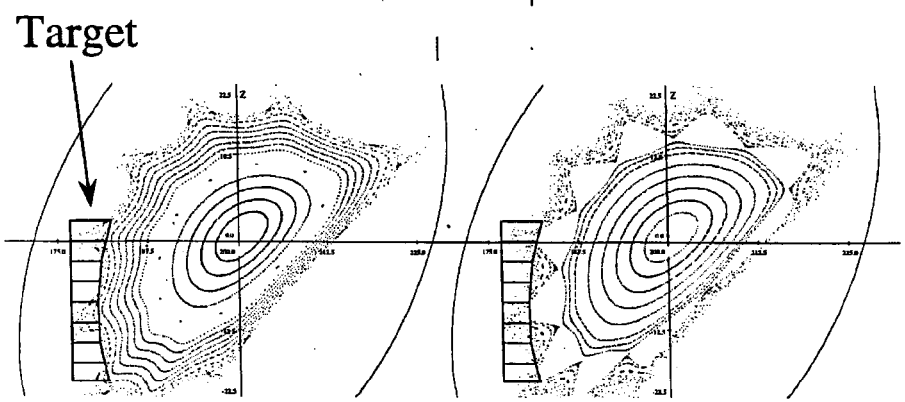

system of 10 limiters

Limiter Configuration
$5/10 < \iota_a < 5/9$

Divertor Configuration
$\iota_a \approx 5/10$

Plasma Boundary with Divertor Baffle in W7-AS

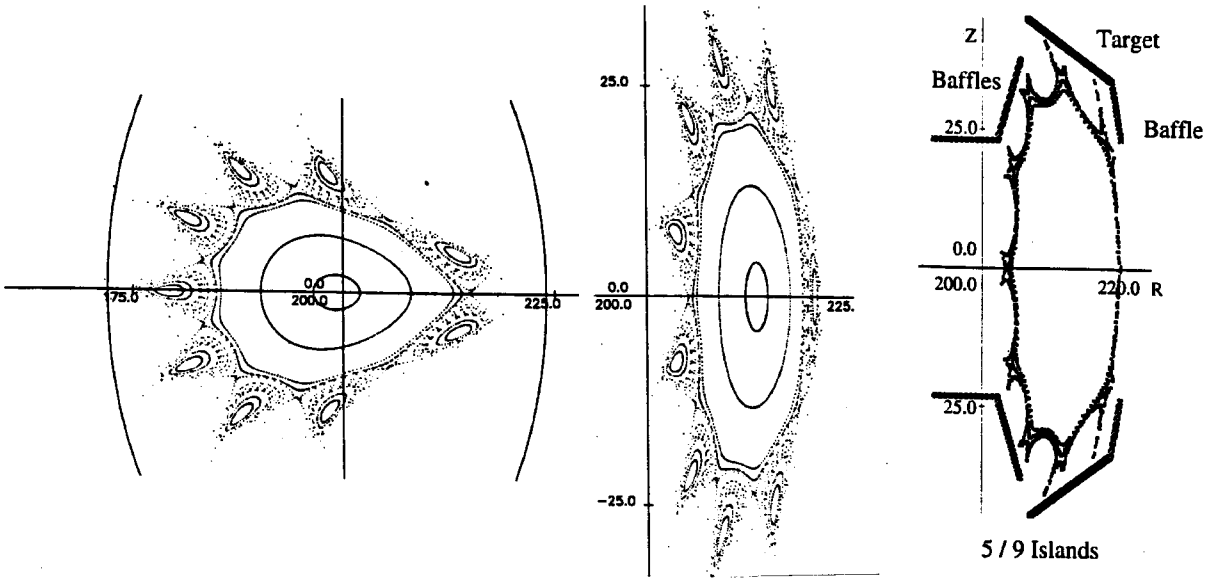

5/9 island structure and divertor baffle arrangement

Island Divertors for W7-AS and W7-X

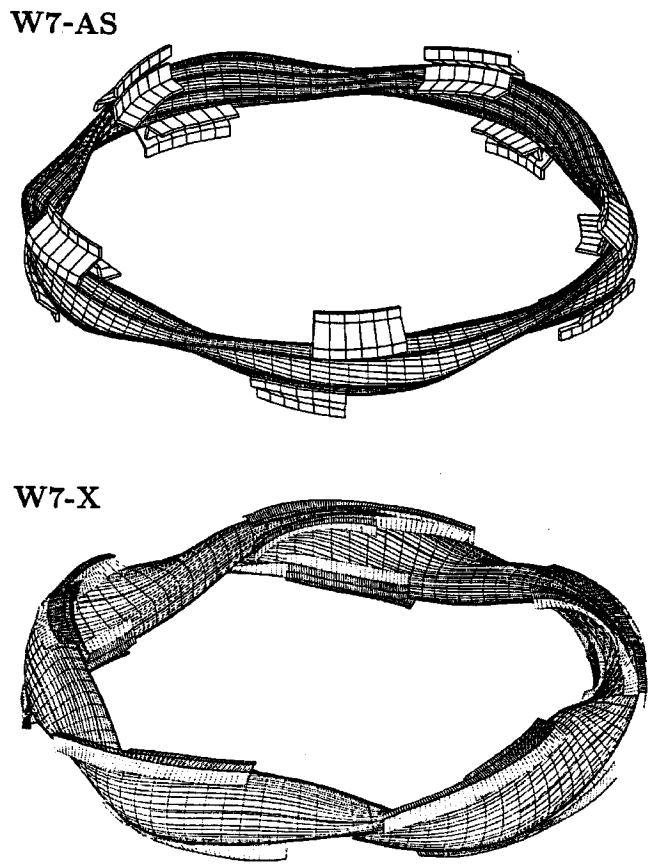

Fig. 1. Plasma column and divertor target and baffle arrangement of W7-AS ($R = 2$ m) and W7-X ($R = 5.5$ m). Note the discontinuou divertor elements compared to tokamak divertors.

Conclusions for NCSX and QOS

- **The first task is to determine the structure of the magnetic field outside the separatrix: "Fishtail"? Islands? Ergodic? Laminar ?**
- **The simplest option for plasma boundary control is a pair of rail limiters (W7-AS) to generate a well-defined plasma boundary layer and minimize areas of uncontrolled plasma-wall interaction.**
- **A symmetric inboard limiter/divertor (W7-AS) provides somewhat better controlled plasma-wall interactions, but doesn't seem to provide much neutrals control.**
- **A Local Island Divertor (LHD) may be ok for global density control, but may not be sufficient for neutrals (profile) and impurity control.**
- **A Helical Divertor (LHD) may be the most complete divertor configuration, but neutrals control at the plate might be poor due to the exhaust plasma configuration.**
- **An Island Divertor (W7-AS) can be customized for standard island configuration; modeling with 3-D Monte Carlo : EMC3-EIRENE for W7-AS and W7-X looks promising for neutrals control.**

Initial Plan for Power and Particle Handling in NCSX

Phase I:

1. Determine the structure of the magnetic field outside the last closed flux surface.
2. Line the wall with graphite tiles along the expected helical stripes or other areas of intense plasma-wall interactions.
3. Install movable top/bottom rail limiters for a well-defined plasma boundary.
4. Implement baking of the vacuum vessel at 350 C.
5. Implement glow discharge conditioning between shots.
6. Implement boronization capabilities.
7. Implement hardware for radiative boundary experiments (neon, other gas puff)

Phase II:

1. Design pumped divertor for active neutrals and impurity control and for stationary radiative boundary operation.