NO.	REVISION	BY	CH	SUP	APPROVED	DATE

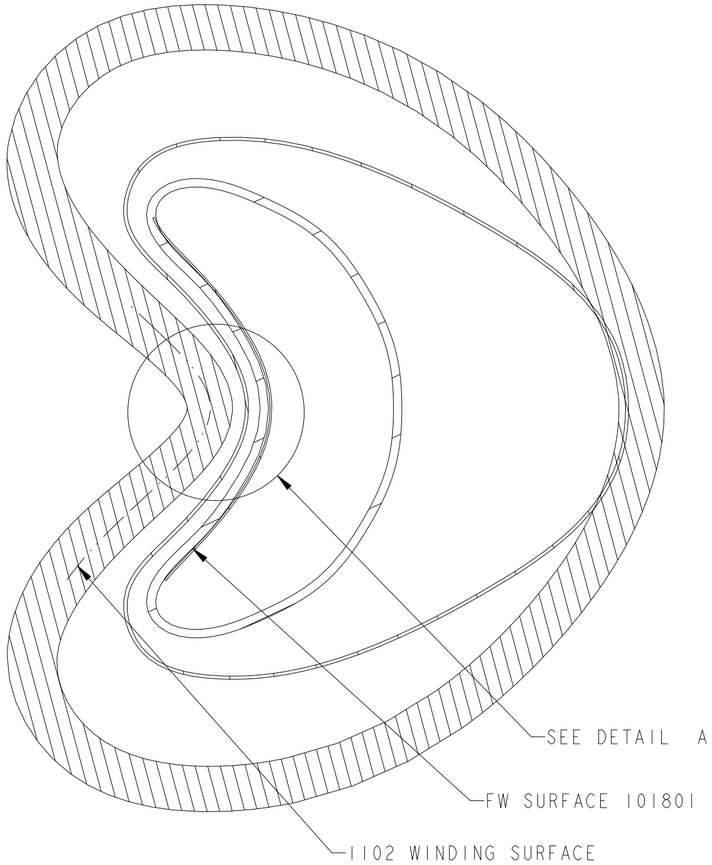

SECTION 0-0

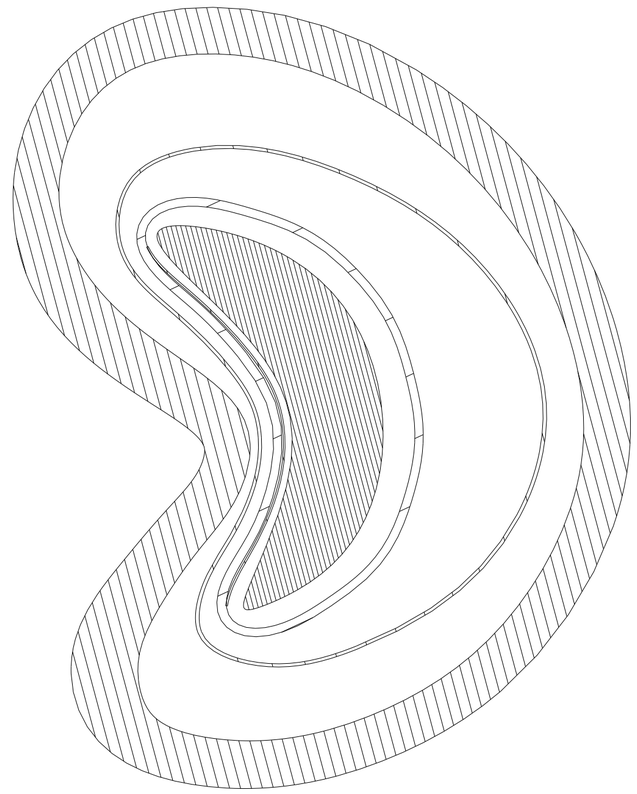

SECTION 15-15

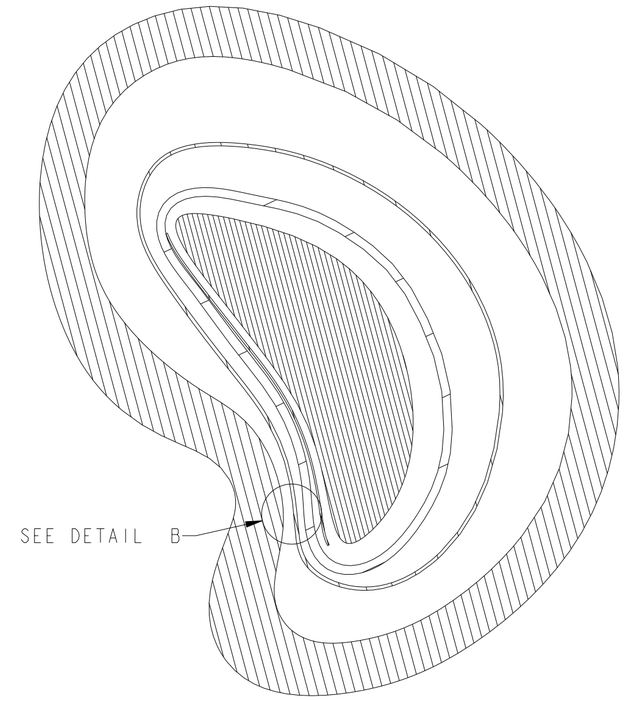

SECTION 30-30

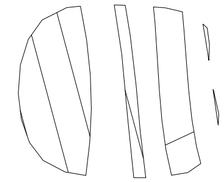

DETAIL B
SCALE 0.500

MINIMUM CLEARENCE BETWEEN VV AND SHELL = .88"

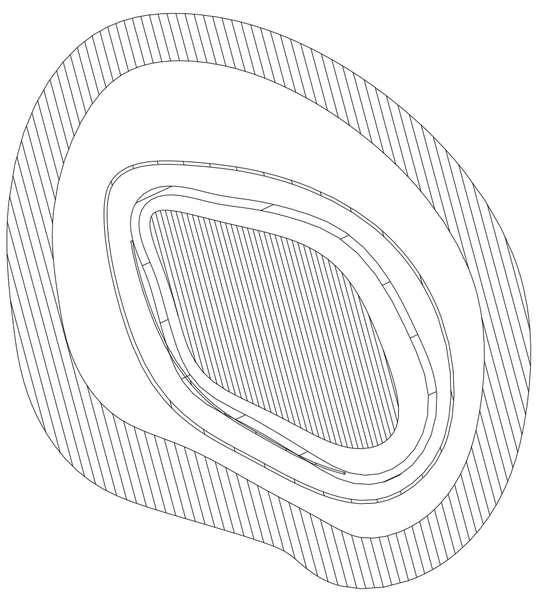

SECTION 45-45

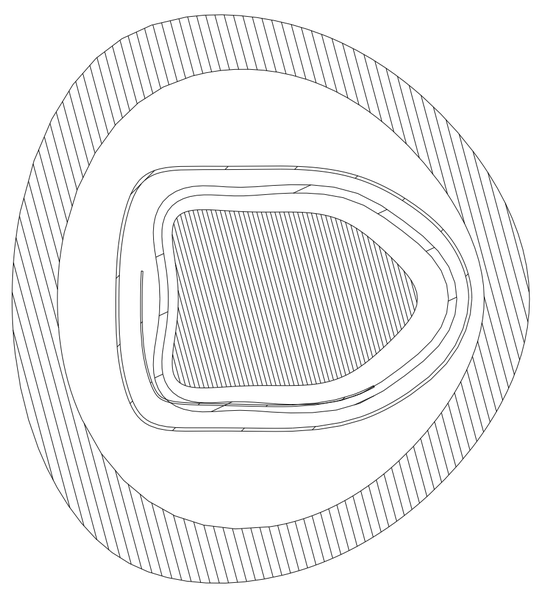

SECTION 60-60

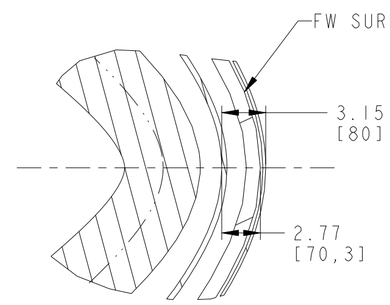

DETAIL A
SCALE 0.250

S17B-VV-014
S17B173-010

ITEM NO.	DRAWING NO	NOMENCLATURE OR DESCRIPTION	MATERIAL	QTY REQD
5	S17B173-010	--	--	1
4	S17B-WINDING_NTERFACES	--	--	1
3	S17B-VV-014	--	--	1
2	S17B-FWSURF-101801	--	--	1
1	S15E110-101	--	--	1

PARTS LIST

COMPUTER GENERATED DRAWING
MANUAL CHANGES NOT PERMITTED

Pro E

DO NOT VERIFY INFORMATION BY SCALING DRAWING

NEXT ASSEMBLY

CENTRAL FILES:

UNLESS OTHERWISE SPECIFIED
DIMENSIONS ARE IN INCHES
MACHINE SURFACES 125
BREAK SHARP EDGES .005/.020
TOLERANCES NON-CUMULATIVE

DECIMAL-INCH		FRACTIONS	
.X	.100	0°-12°	1/16
.XX	.030	12°-72°	1/8
.XXX	.005	72°-120°	1/4
ANGULAR	0°-15'	OVER 120°	1/2

PRINCETON PLASMA PHYSICS LABORATORY
PRINCETON UNIVERSITY
XXXXXXXXXXXXXXXXXXXXXXX

DIV: MECH. ENG.
DATE:
ENG:
DSN:
CHK:
APPROVED
CHK SUPV
EMI

S17B-WINDING_INTERFACES

SHEET 1 OF 2 REV 0

DATE: ***

WELDING ENGINEER
APPVD: DATE

NO.	REVISION	BY	CH	SUP	APPROVED	DATE

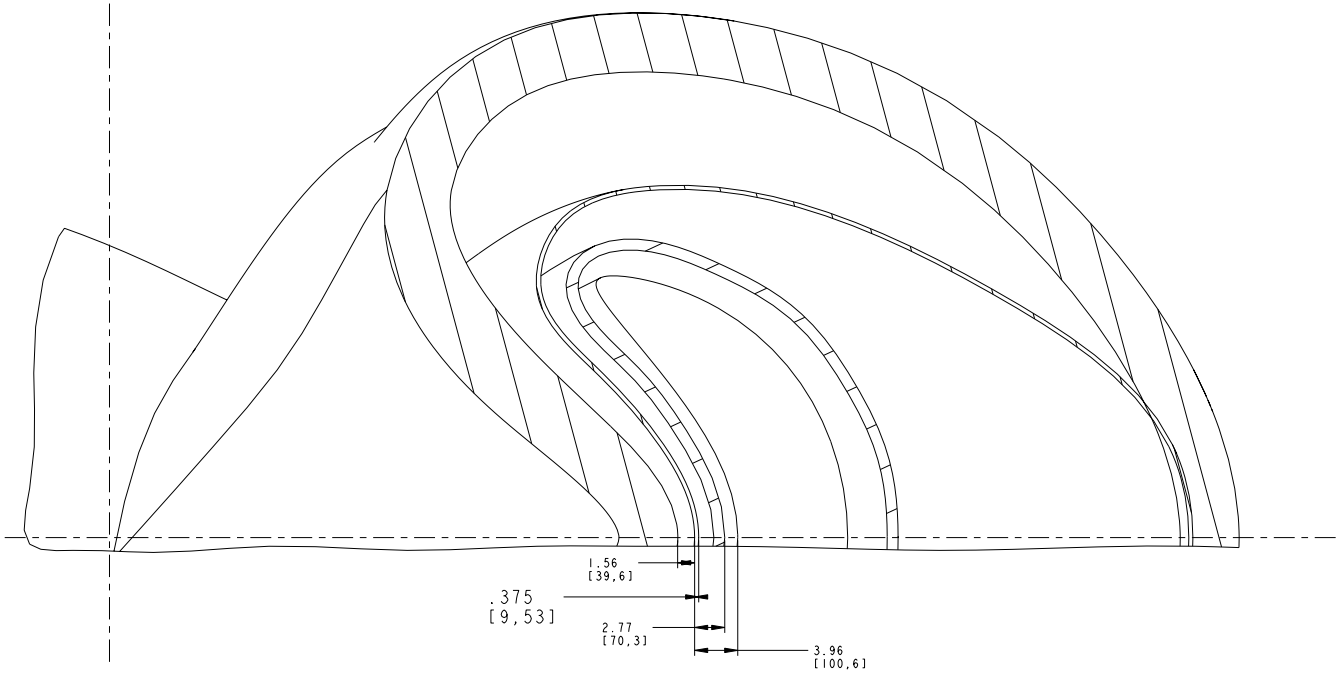

SECTION 0-0

ITEM NO.	DRAWING NO	NOMENCLATURE OR DESCRIPTION	MATERIAL	QTY REQD
5	S17B173-010	--	--	1
4 S	7B-WINDING_INTERFACES	--	--	1
3	S17B-VV-014	--	--	1
2	S17B-FWSURF-101801	--	--	1
1	S15E110-101	--	--	1

PARTS LIST

COMPUTER GENERATED DRAWING
MANUAL CHANGES NOT PERMITTED
Pro E
DO NOT VERIFY INFORMATION BY SCALING DRAWING

weight=1238.5 lbs

DATE:

WELDING ENGINEER
APPVD:_____ DATE

NEXT ASSEMBLY

CENTRAL FILES:
UNLESS OTHERWISE SPECIFIED
DIMENSIONS ARE IN INCHES
MACHINE SURFACES
BREAK SHARP EDGES .005/.020
TOLERANCES NON-CUMULATIVE

DECIMAL-INCH		FRACTIONS	
.X	±.100	0°-12°	±1/16
.XX	±.030	12°-72°	±1/8
.XXX	±.005	72°-120°	±1/4
ANGULAR	±0°15'	OVER 120°	±1/2

PRINCETON PLASMA PHYSICS LABORATORY
PRINCETON UNIVERSITY
XXXXXXXXXXXXXXXXXXXXXXX

DIV: MECH. ENG. DATE:
ENG:
DSN:
CHK:
APPROVED
CHK SUPV
EMI

S17B-WINDING_INTERFACES

SHEET 2 OF 2 REV 0

S17B-WINDING_INTERFACES