NCSX NEUTRAL BEAM STUDY

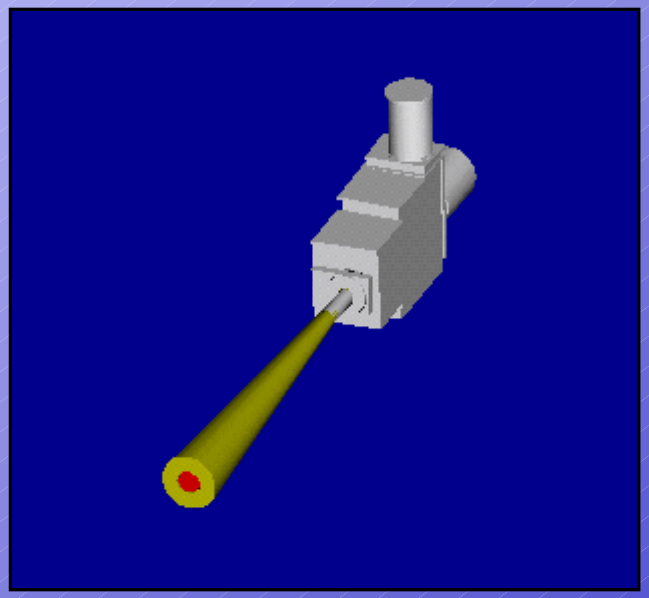

Mike Cole

NCSX Project Meeting

ORNL

February 23-24, 1999

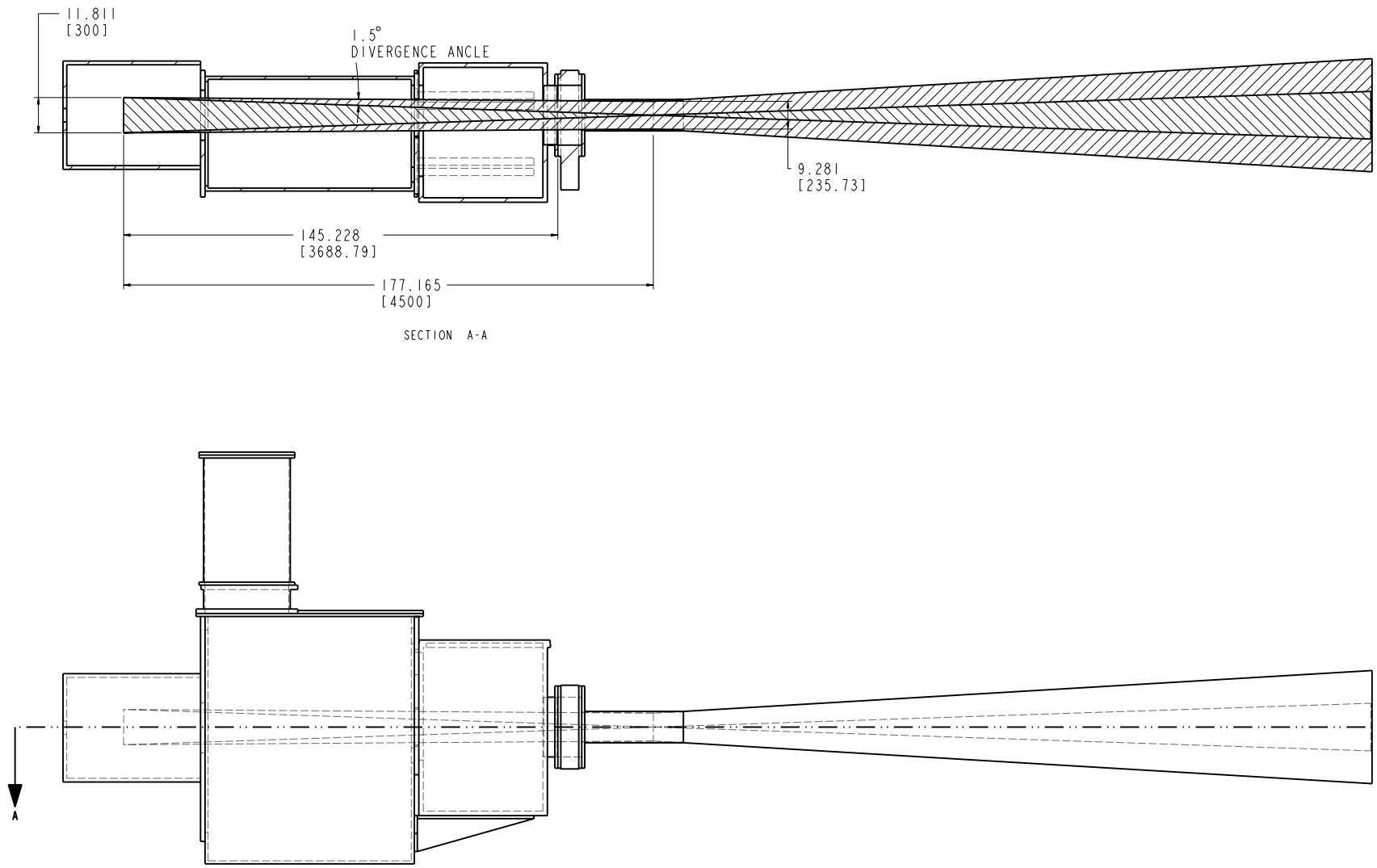

NO.	REVISION	BY	CH	SUP	APPROVED	DATE

NO.	DATE	DESCRIPTION	BY

PRELIMINARY ISSUES
NOT APPROVED FOR CONSTRUCTION EXCEPT AS NOTED

WELDING ENGINEER

APPVD:_____ DATE

COMPUTER GENERATED DRAWING
MANUAL CHANGES NOT PERMITTED

Pro E

DO NOT VERIFY INFORMATION BY SCALING DRAWING

NEXT ASSEMBLY

CENTRAL FILES:

UNLESS OTHERWISE SPECIFIED
DIMENSIONS ARE IN INCHES
MACHINE SURFACES 1/1
BREAK SHARP EDGES .005/.020

TOLERANCES NON-CUMULATIVE

DECIMAL-INCH		FRACTIONS	
.X	±.100	0°-12°	±1/16
.XX	±.030	12°-72°	±1/8
.XXX	±.005	72°-120°	±1/4
ANGULAR	±0°-15'	OVER 120°	±1/2

PRINCETON PLASMA PHYSICS LABORATORY
PRINCETON UNIVERSITY
NCSX PROJECT

NCSX
NEUTRAL BEAM AND BEAMBOX

DIV: MECH. ENG.
DATE:
CADD FILE:
ENG:
APPROVED
DWN:
CHK:
CHK
SUPV
EMI

NB_AND_BEAMBOX

SHEET 1 OF 1
REV 0

NO.	REVISION	BY	CH	SUP	APPROVED	DATE

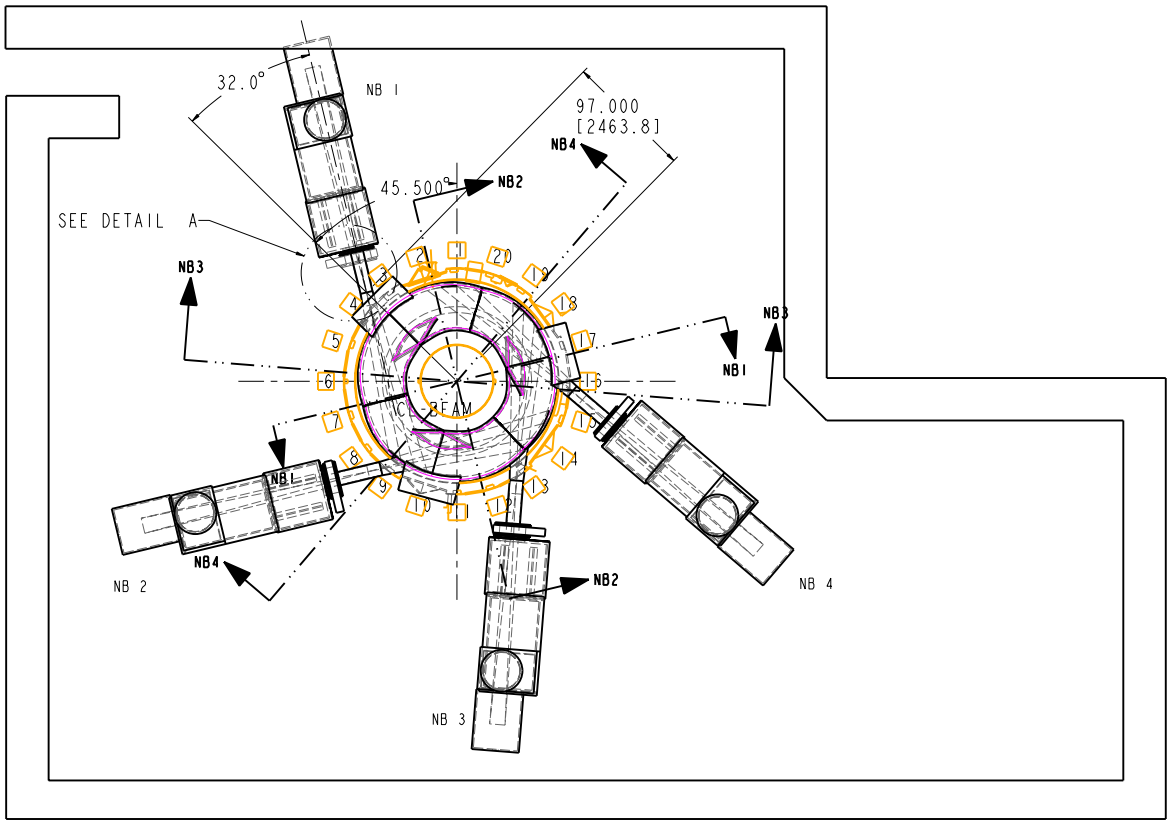

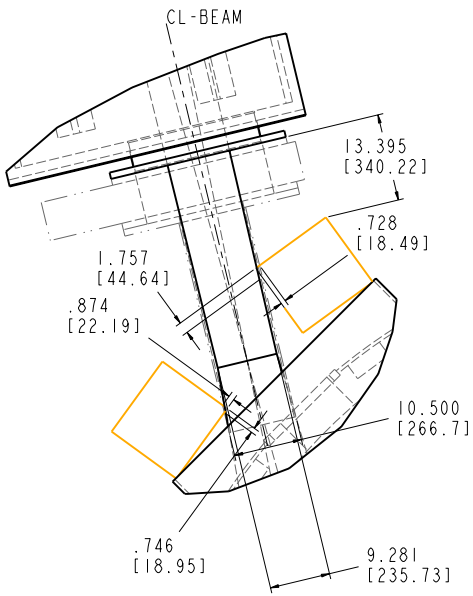

DETAIL A
SCALE 0.150

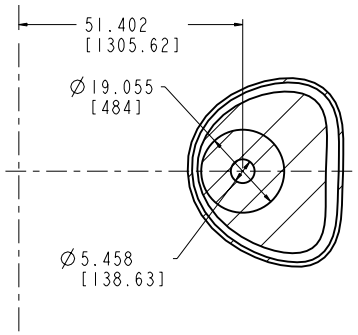

SECTION NB1-NB1
SCALE 0.100

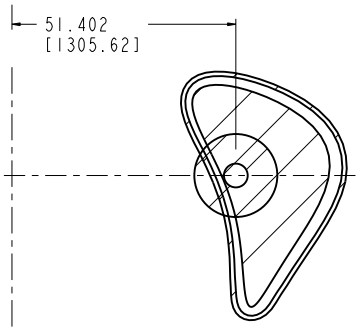

SECTION NB2-NB2
SCALE 0.100

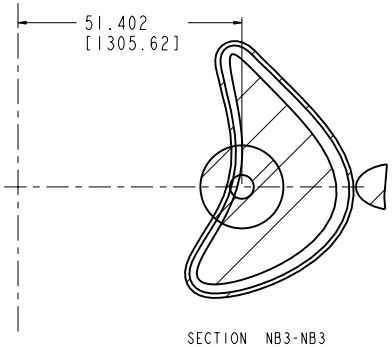

SECTION NB3-NB3
SCALE 0.100

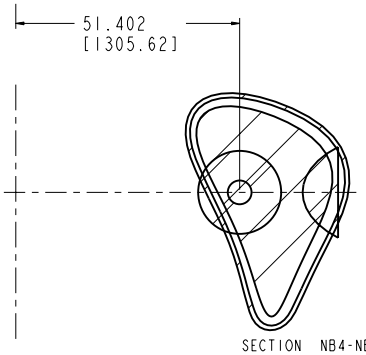

SECTION NB4-NB4
SCALE 0.100

Printed: 2/22/99

NO.	DATE	DESCRIPTION	BY

PRELIMINARY ISSUES
NOT APPROVED FOR CONSTRUCTION
EXCEPT AS NOTED
WELDING ENGINEER
APPVD: DATE

COMPUTER GENERATED DRAWING
MANUAL CHANGES NOT PERMITTED

Pro E

DO NOT VERIFY INFORMATION BY SCALING DRAWING

NEXT ASSEMBLY

CENTRAL FILES:
UNLESS OTHERWISE SPECIFIED
DIMENSIONS ARE IN INCHES
MACHINE SURFACES 125
BREAK SHARP EDGES .005/.020
TOLERANCES NON-CUMULATIVE

DECIMAL-INCH		FRACTIONS	
.X	±.100	0°-30'	±1/16
.XX	±.030	30'-72'	±1/8
.XXX	±.005	72'-120'	±1/4
ANGULAR	±0°-15'	OVER 120'	±1/2

PRINCETON PLASMA PHYSICS LABORATORY
PRINCETON UNIVERSITY
NCSX PROJECT

NCSX
NEUTRAL BEAM POSITION

DIV: MECH. ENG.
DATE:
APPROVED
ENG:
DWN:
CHK:
CHK
SUPV
CADD FILE:
NBEAM-ASSY1-3
SHEET 1 OF 1
REV 0

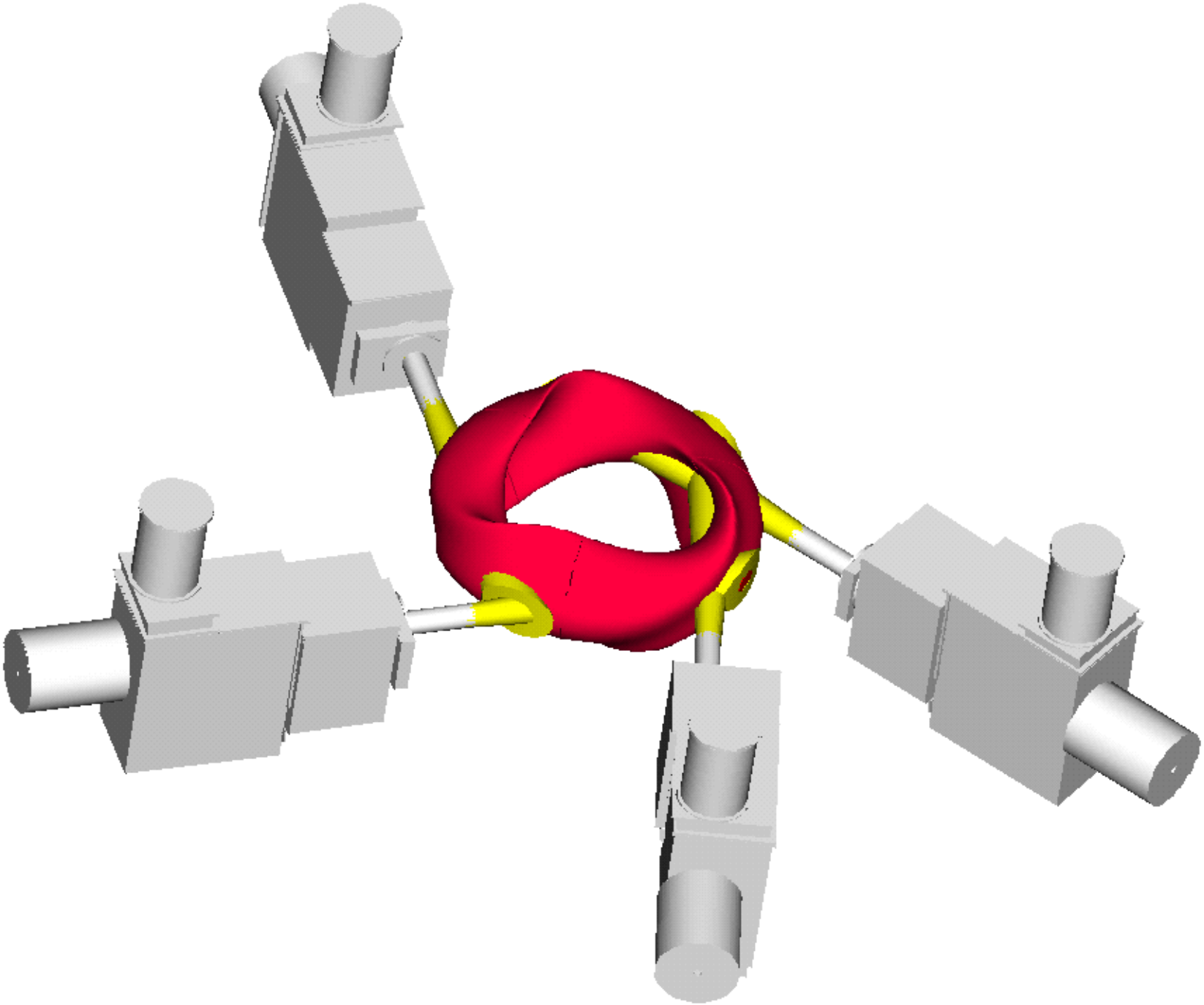

NO.	REVISION	BY	CH	SUP	APPROVED	DATE

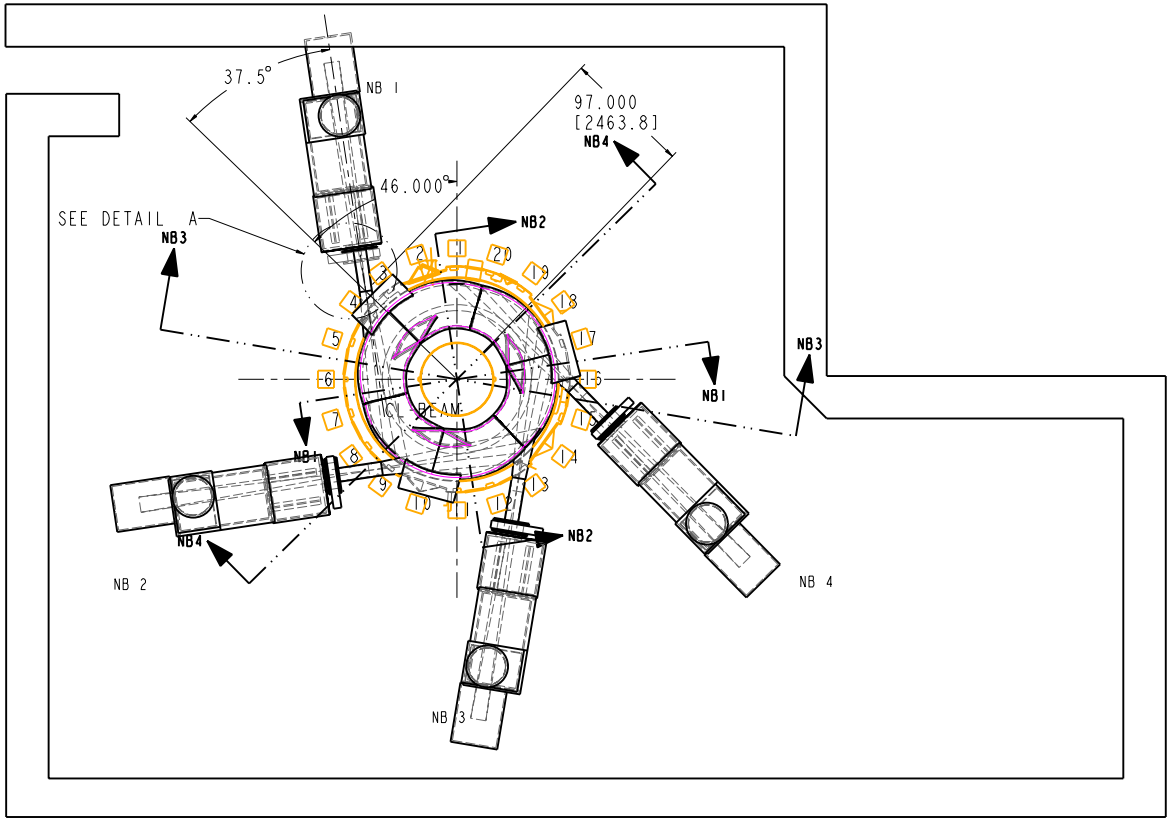

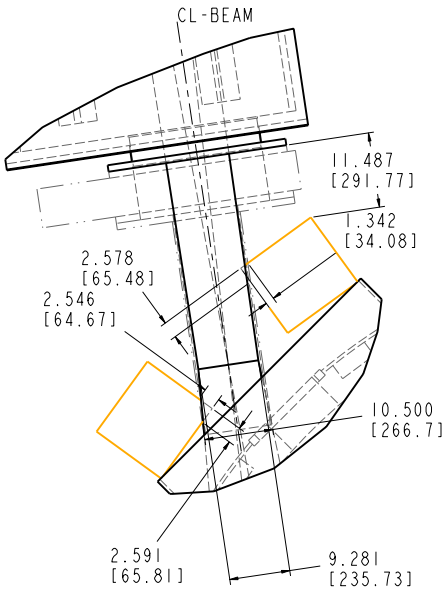

DETAIL A
SCALE 0.150

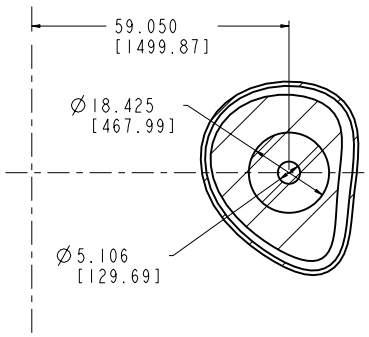

SECTION NB1-NB1
SCALE 0.100

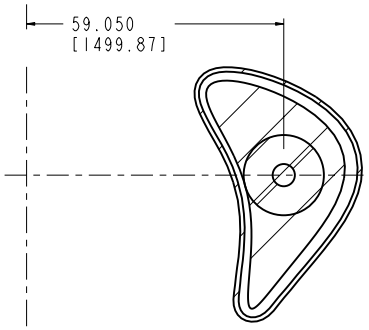

SECTION NB2-NB2
SCALE 0.100

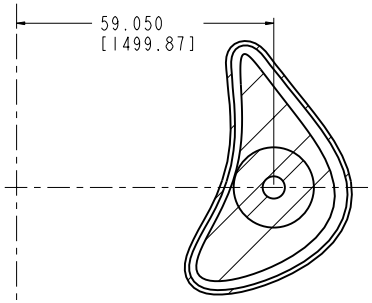

SECTION NB3-NB3
SCALE 0.100

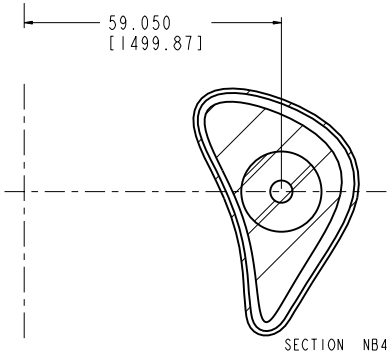

SECTION NB4-NB4
SCALE 0.100

Printed: 2/22/99

NO.	DATE	DESCRIPTION	BY

PRELIMINARY ISSUES
NOT APPROVED FOR CONSTRUCTION
EXCEPT AS NOTED
WELDING ENGINEER
APPVD: DATE

COMPUTER GENERATED DRAWING
MANUAL CHANGES NOT PERMITTED
Pro E
DO NOT VERIFY INFORMATION BY SCALING DRAWING
NEXT ASSEMBLY

CENTRAL FILES:
UNLESS OTHERWISE SPECIFIED
DIMENSIONS ARE IN INCHES
MACHINE SURFACES
BREAK SHARP EDGES .005/.020
TOLERANCES NON-CUMULATIVE

DECIMAL-INCH		FRACTIONS	
.X	±.100	0°-30'	±1/16
.XX	±.030	30'-72'	±1/8
.XXX	±.005	72'-120'	±1/4
ANGULAR	±0°-15'	OVER 120'	±1/2

PRINCETON PLASMA PHYSICS LABORATORY
PRINCETON UNIVERSITY
NCSX PROJECT

NCSX
NEUTRAL BEAM POSITION

DIV: MECH. ENG.
DATE:
APPROVED
ENG:
DWN:
CHK:
CHK
SUPV
CADD FILE:
NBEAM-ASSY1-5
SHEET 1 OF 1
REV 0

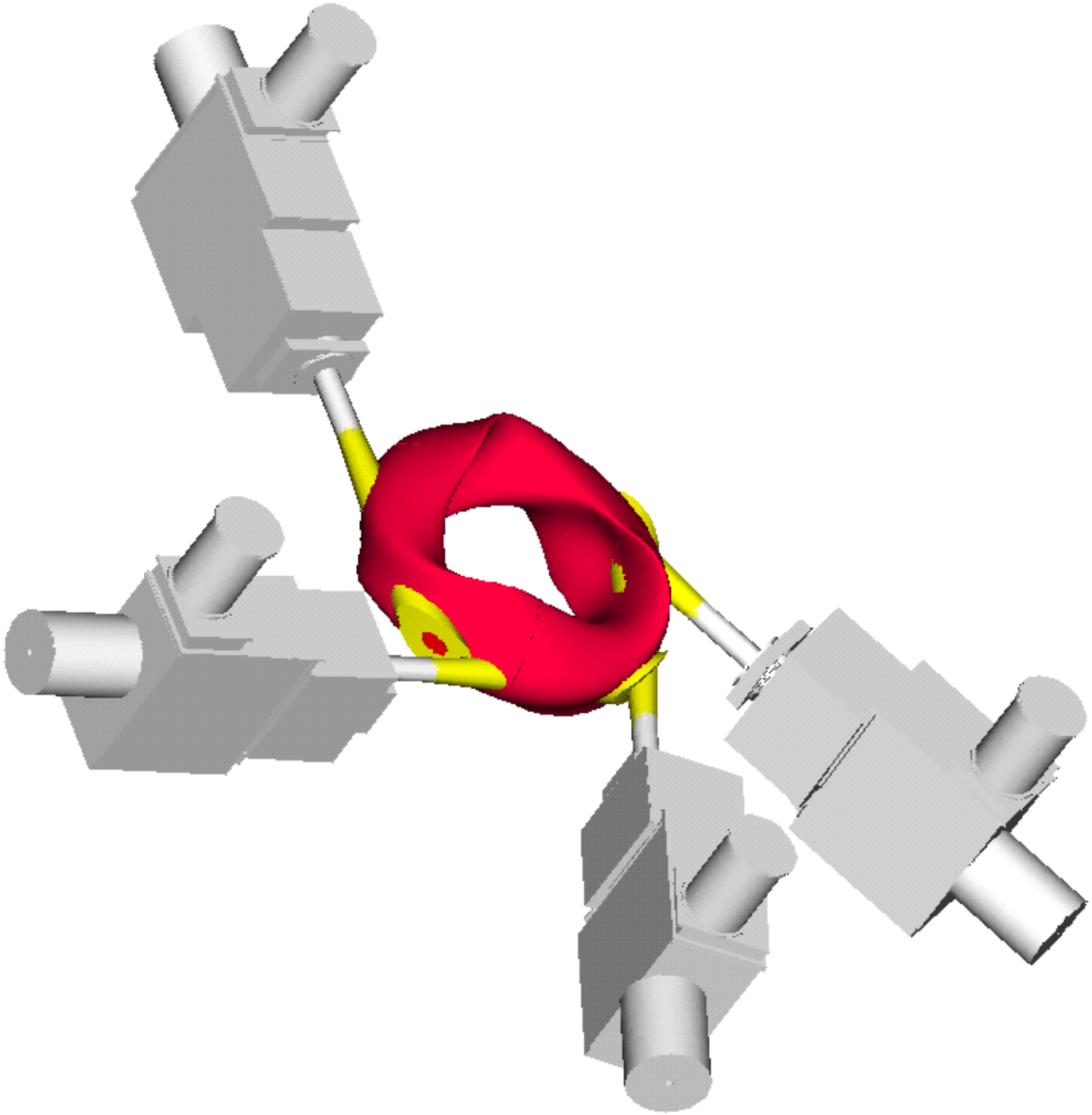

NO.	REVISION	BY	CH	SUP	APPROVED	DATE

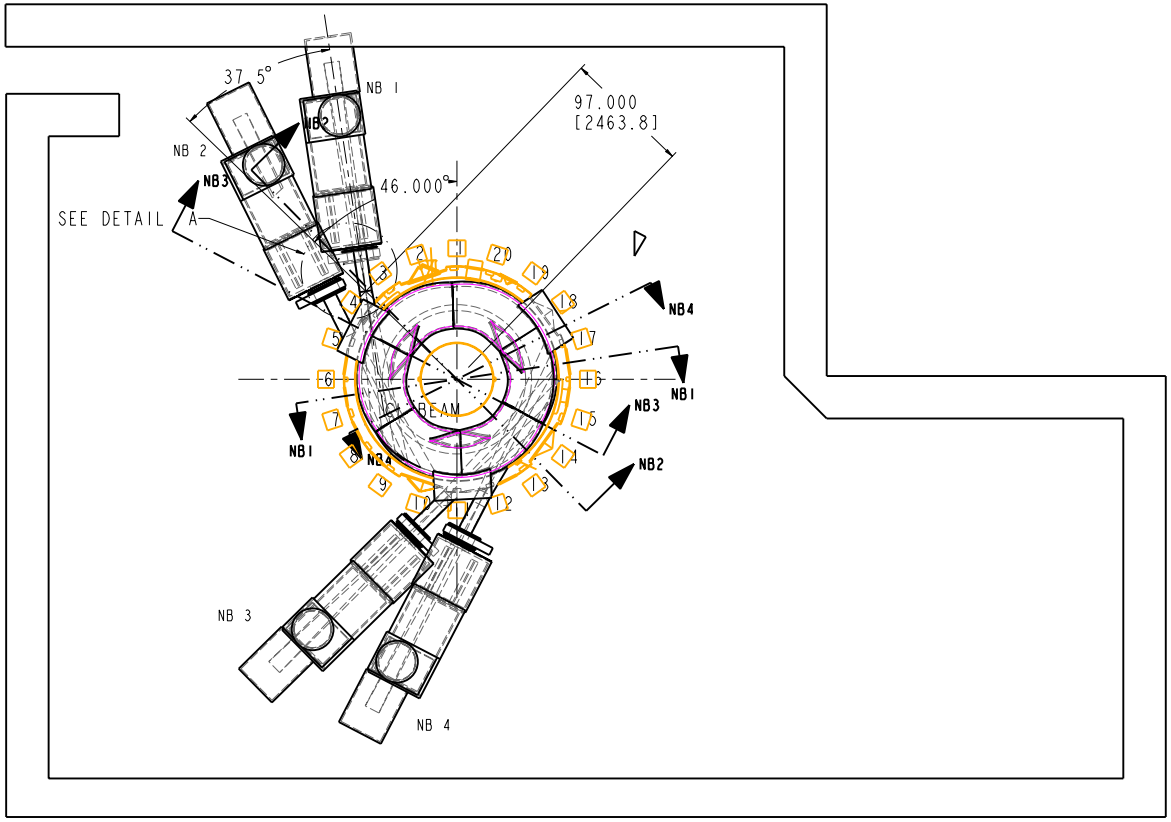

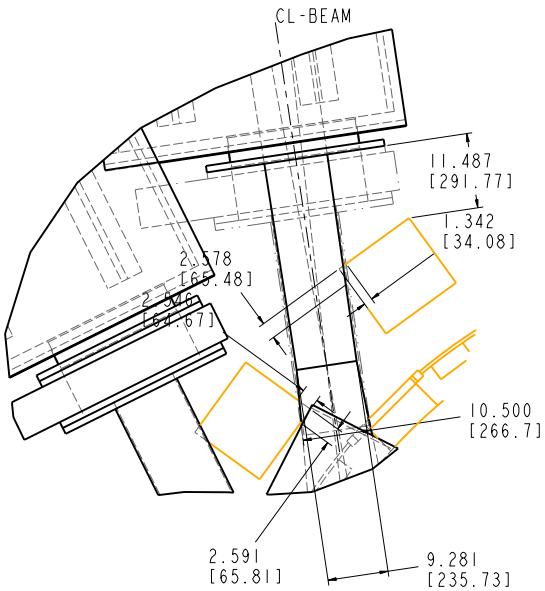

DETAIL A
SCALE 0.150

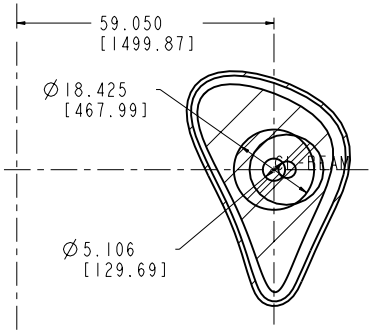

SECTION NB1-NB1
SCALE 0.100

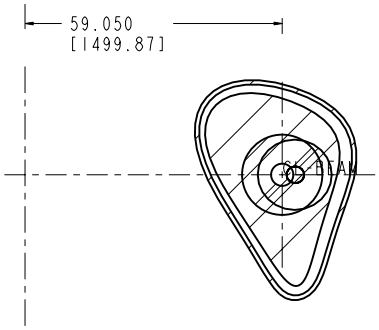

SECTION NB2-NB2
SCALE 0.100

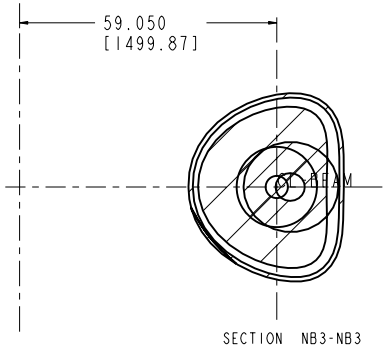

SECTION NB3-NB3
SCALE 0.100

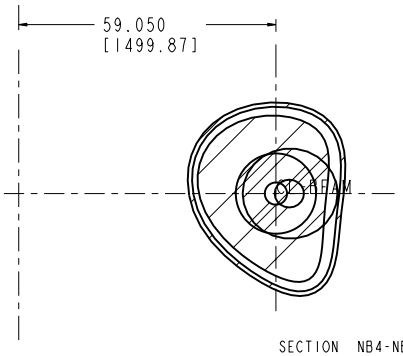

SECTION NB4-NB4
SCALE 0.100

Printed: 2/22/99

NO.	DATE	DESCRIPTION	BY

PRELIMINARY ISSUES
NOT APPROVED FOR CONSTRUCTION
EXCEPT AS NOTED
WELDING ENGINEER
APPVD: DATE

COMPUTER GENERATED DRAWING
MANUAL CHANGES NOT PERMITTED

Pro E

DO NOT VERIFY INFORMATION BY SCALING DRAWING

NEXT ASSEMBLY

CENTRAL FILES:
UNLESS OTHERWISE SPECIFIED
DIMENSIONS ARE IN INCHES
MACHINE SURFACES
BREAK SHARP EDGES .005/.020

TOLERANCES NON-CUMULATIVE

DECIMAL-INCH		FRACTIONS	
.X	±.100	0°-30'	±1/16
.XX	±.030	30'-72'	±1/8
.XXX	±.005	72'-120'	±1/4
ANGULAR	±0°-15'	OVER 120'	±1/2

PRINCETON PLASMA PHYSICS LABORATORY
PRINCETON UNIVERSITY
NCSX PROJECT

NCSX
NEUTRAL BEAM POSITION

DIV: MECH. ENG.
DATE:
APPROVED
ENG:
DWN:
CHK:
CHK
SUPV
CADD FILE:
NBEAM-ASSY1-5MOD-A
SHEET 1 OF 1
REV 0

NO.	REVISION	BY	CH	SUP	APPROVED	DATE

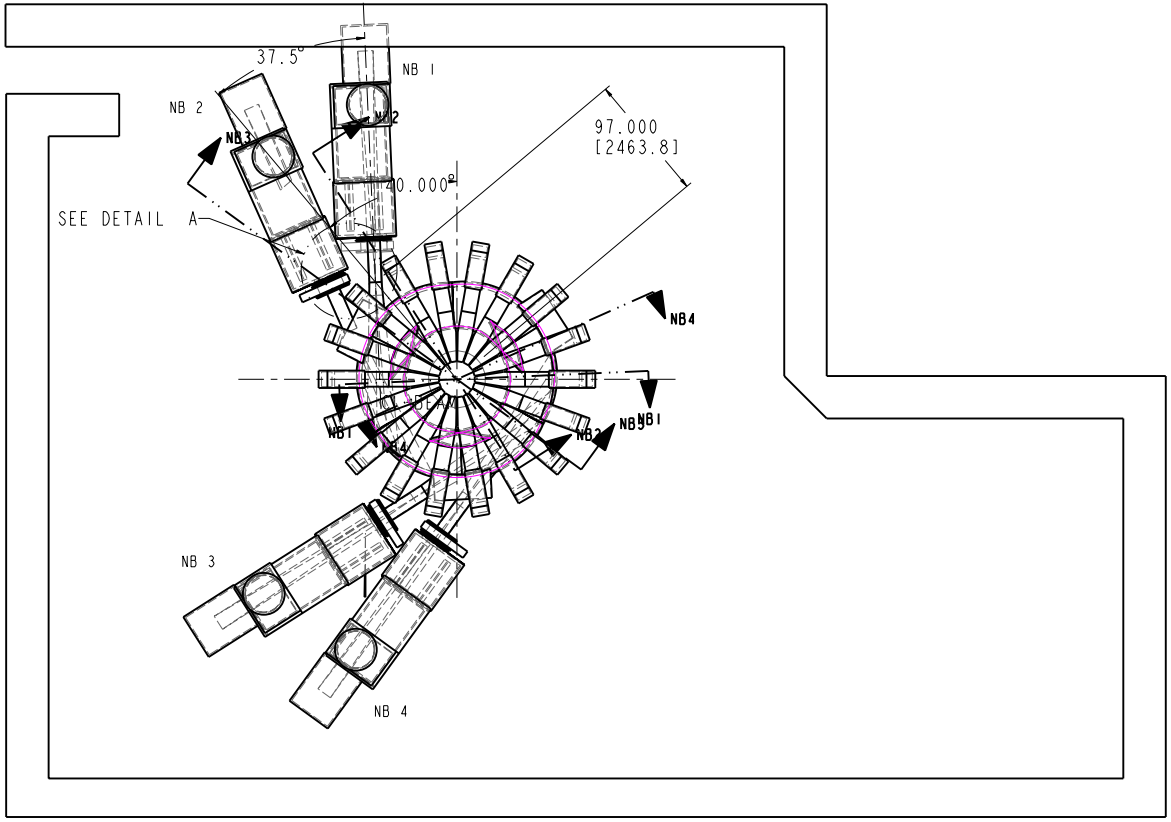

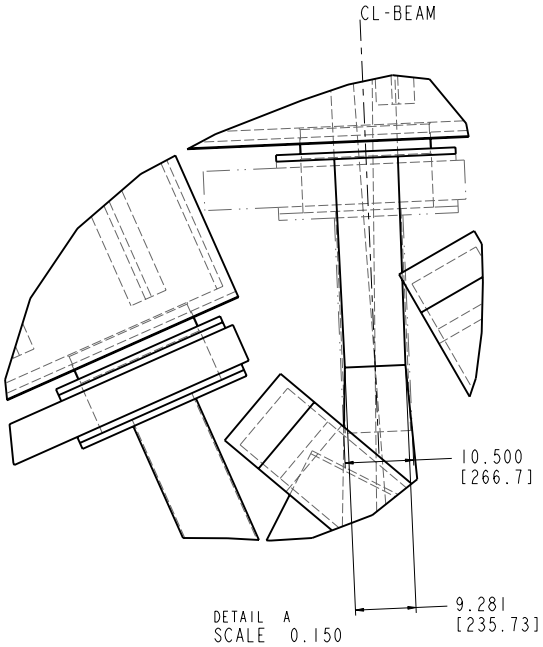

DETAIL A
SCALE 0.150

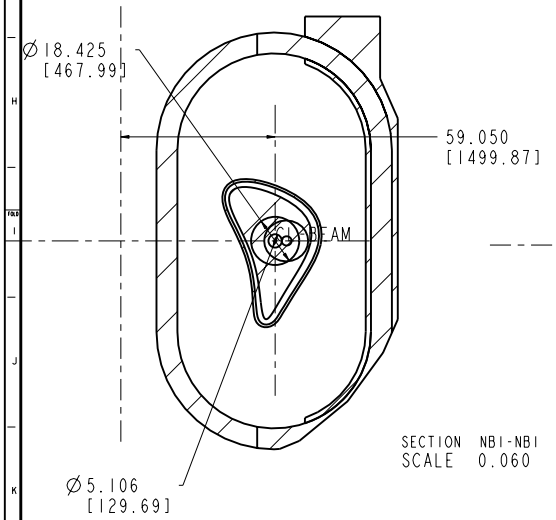

SECTION NB1-NB1
SCALE 0.060

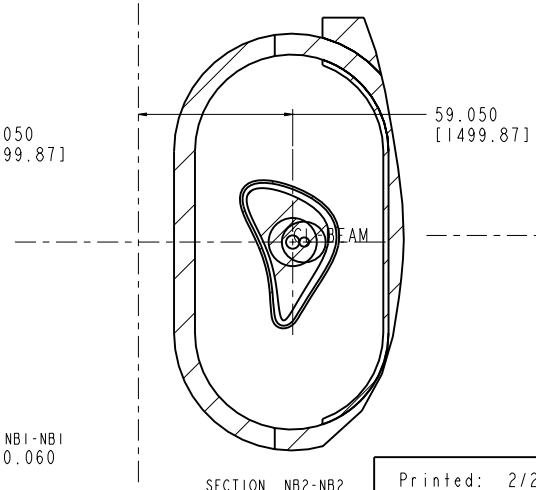

SECTION NB2-NB2
SCALE 0.060

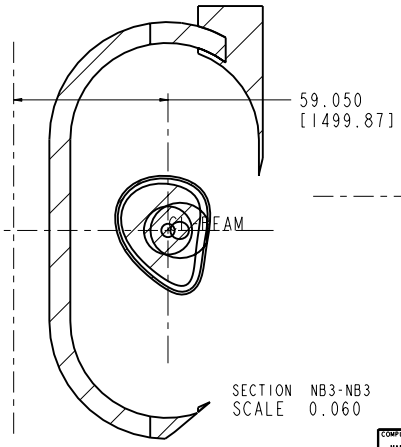

SECTION NB3-NB3
SCALE 0.060

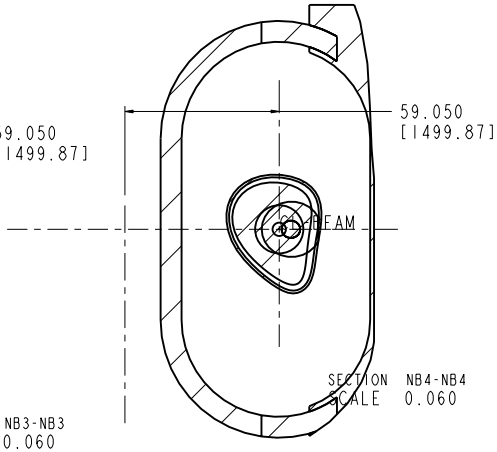

SECTION NB4-NB4
SCALE 0.060

Printed: 2/22/99

NO.	DATE	DESCRIPTION	BY

PRELIMINARY ISSUES
NOT APPROVED FOR CONSTRUCTION
EXCEPT AS NOTED
WELDING ENGINEER
APPVD: DATE

COMPUTER GENERATED DRAWING
MANUAL CHANGES NOT PERMITTED

Pro E

DO NOT VERIFY INFORMATION BY SCALING DRAWING

NEXT ASSEMBLY

CENTRAL FILES:
UNLESS OTHERWISE SPECIFIED
DIMENSIONS ARE IN INCHES
MACHINE SURFACES
BREAK SHARP EDGES .005/.020

TOLERANCES NON-CUMULATIVE

DECIMAL-INCH		FRACTIONS	
.X	±.100	0°-30'	±1/16
.XX	±.030	30°-72°	±1/8
.XXX	±.005	72°-120°	±1/4
ANGULAR	±0°-15'	OVER 120°	±1/2

PRINCETON PLASMA PHYSICS LABORATORY
PRINCETON UNIVERSITY
NCSX PROJECT

NCSX
NEUTRAL BEAM POSITION

DIV: MECH. ENG. | DATE: | APPROVED
ENG:
DWN:
CHK: | CHK | SUPV

CADD FILE:
NBEAM-ASSY1-5CMOD-B

SHEET 1 OF 1 | REV 0

Addendum to Feb 23-24 NCSX Meeting

The following was added
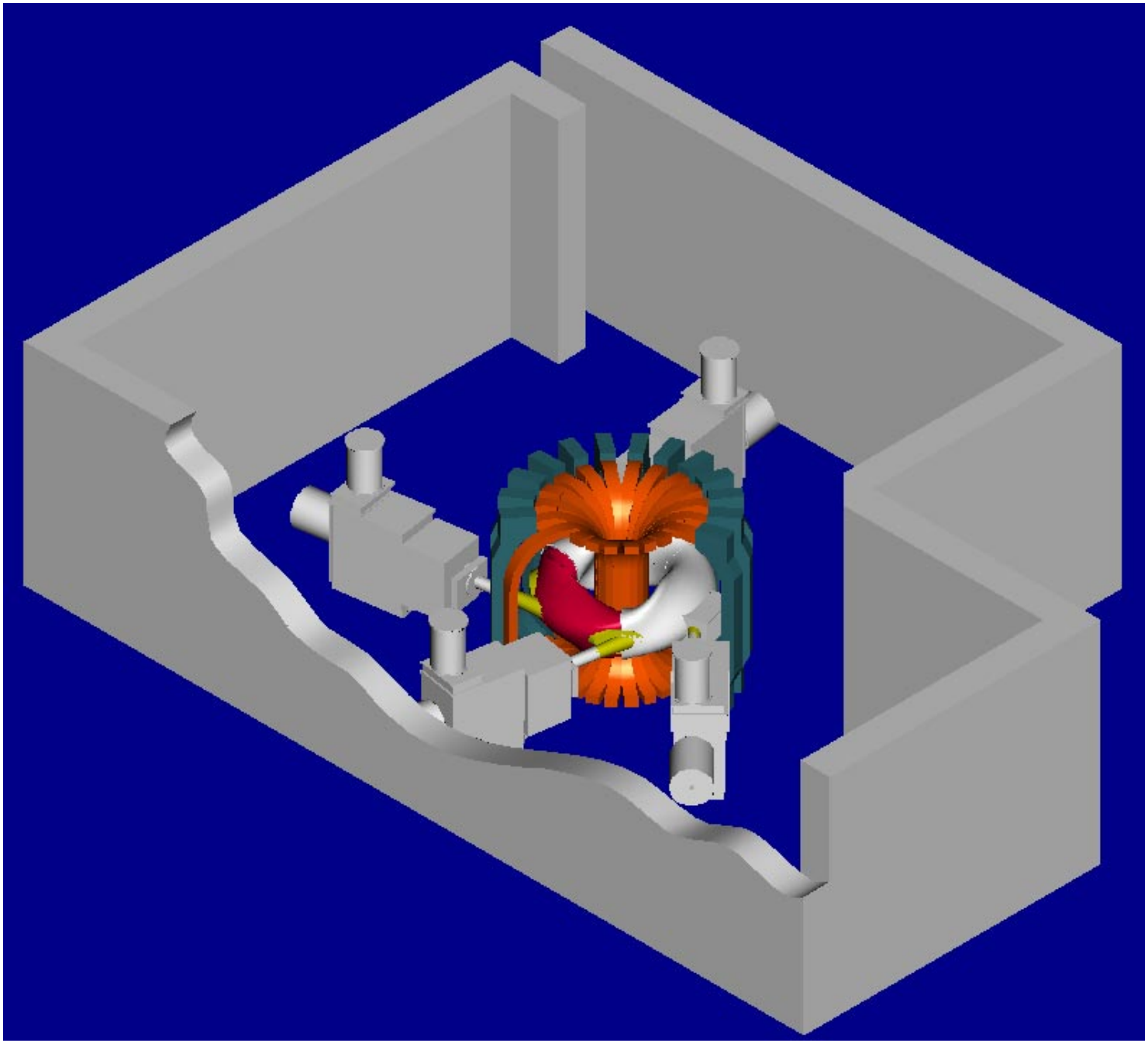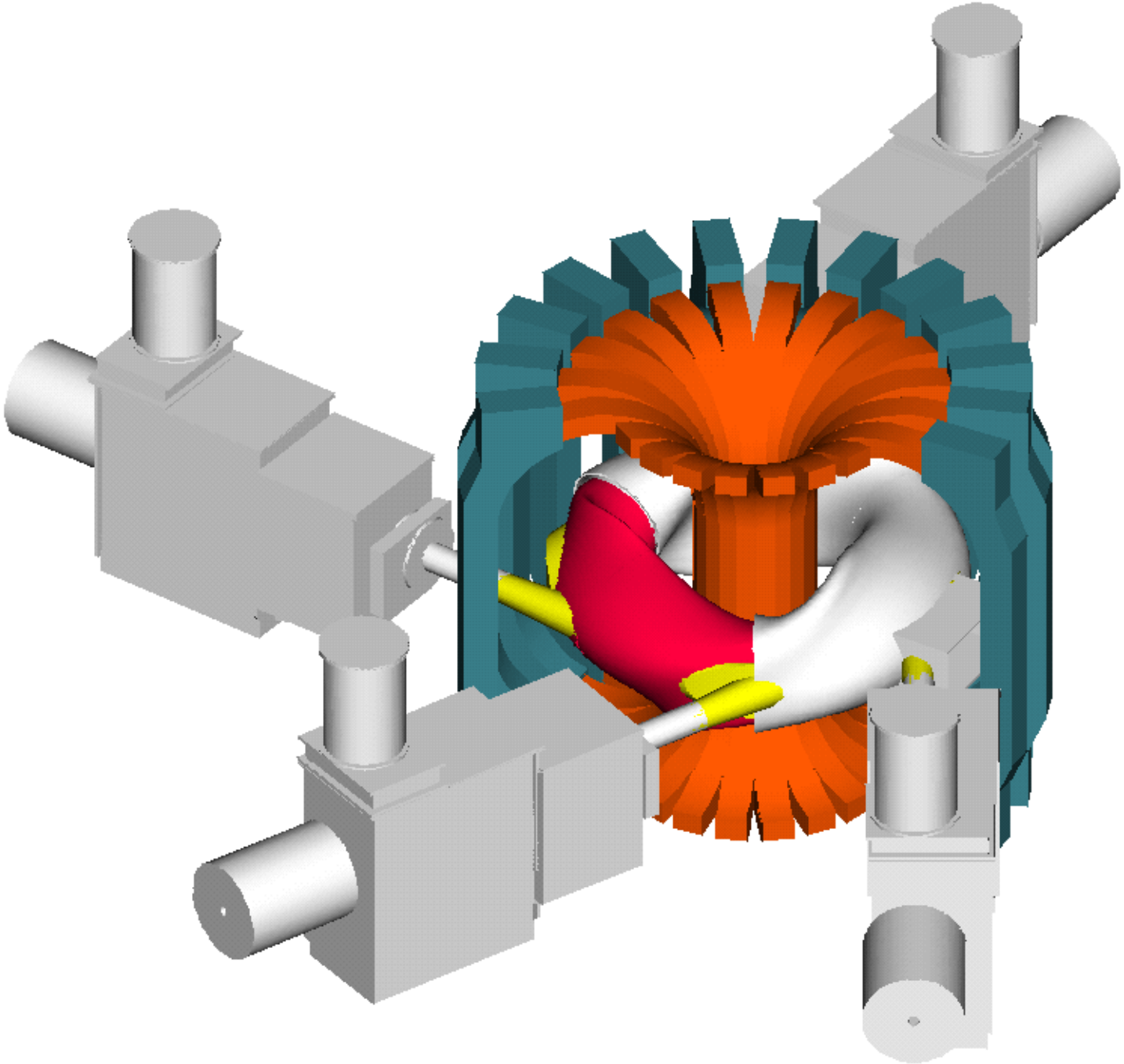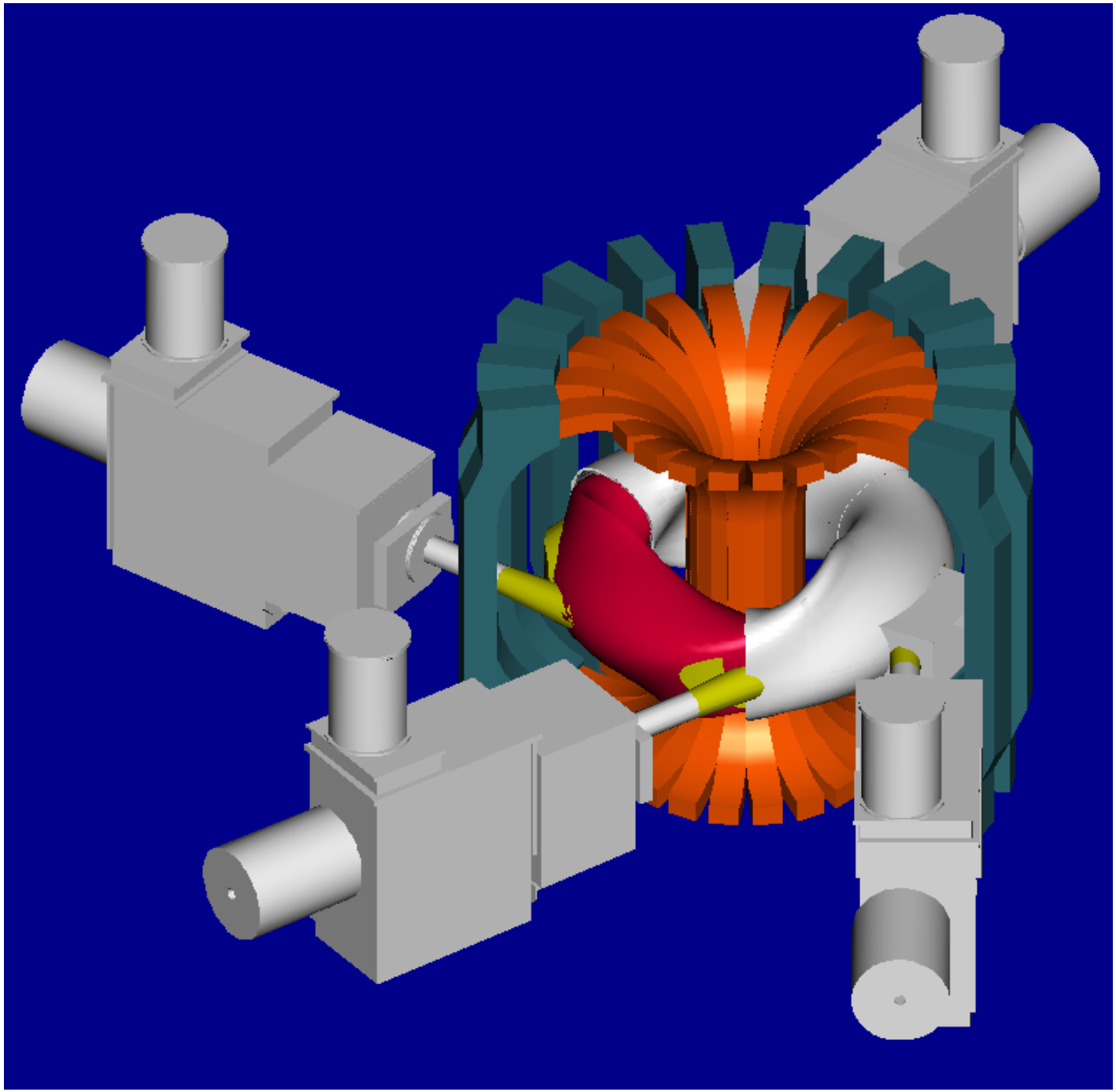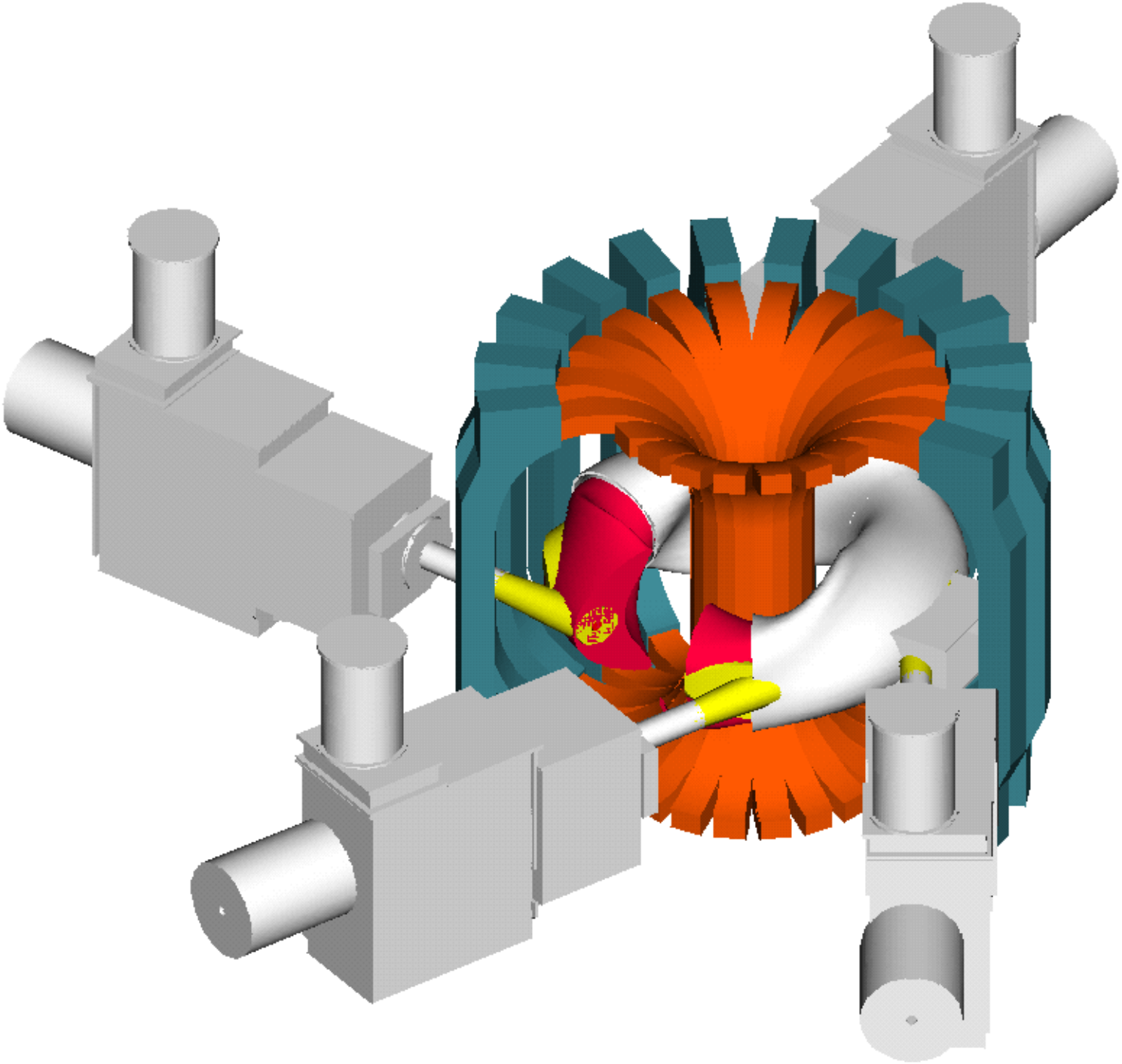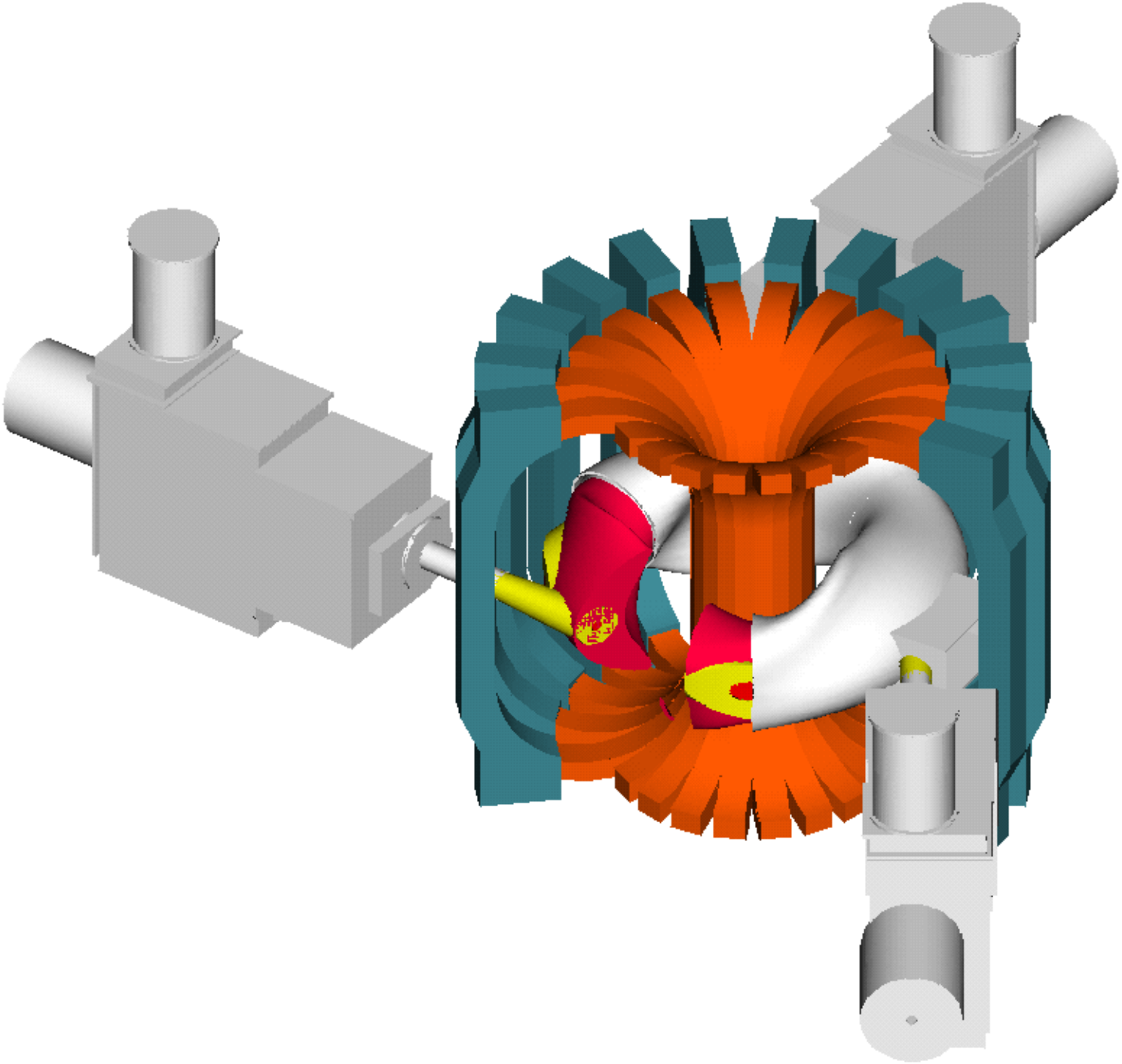
Feb 26, 1999