WBS 1 - Torus Systems Design Progress and Status

Mike Cole, Paul Goranson, Brad Nelson, David Williamson

NCSX Project Meeting
PPPL
March 30-31, 1999

WBS-1 Goals for February 23 to March 30

- Continue to refine design criteria and requirements

- Continue to focus on saddle coils and shell structure
  1. Calculate stress and deflection picture for shell, develop criteria for shell joints
  2. Contact vendors concerning fabrication / winding / structure concept
  3. Develop R&D plan

- Continue to work on vacuum vessel issues
  1. Contact potential fabricators about break bending vs other forming techniques
  2. Explore permeability issue (what did other stellarator projects do, what is impact of alternate material?)
  3. Develop R&D plan

- Continue to develop and benchmark tools for analysis and for iterating 3-D coil designs between physics and engineering

Progress since February 23 meeting

Progress has been made in several areas since February 23 meeting

- Performed stress and deflection calculations for structural shell
- Attended National Design Engineering Show in Chicago to develop contacts with potential vendors and see what new products and processes are available
- Narrowed the list of potential design and fabrication concepts
  - Plastic appears to be unsuitable (too weak) as a material for the shell
  - Break-bending appears to be a reasonable approach for vacuum vessel fabrication
- Developed first cut at R&D plan
- Continued design integration task with NBI-aiming studies using 18 TF coils

Vacuum Vessel Configuration

- Liner is a stand-alone, structural vessel that can be baked to 350-C

Parameters

- Inner radius = 38-in (0.97-m)
- Outer radius = 78-in (1.98-m)
- Height = 68-in (1.73-m)
- Wall Thickness = 0.375-in
- Contour Tolerance = +/-5-mm
- Inside Surface Area = 58k-in2
- Enclosed Volume = 218-ft3
- Weight w/o PFCs = 8300-lb

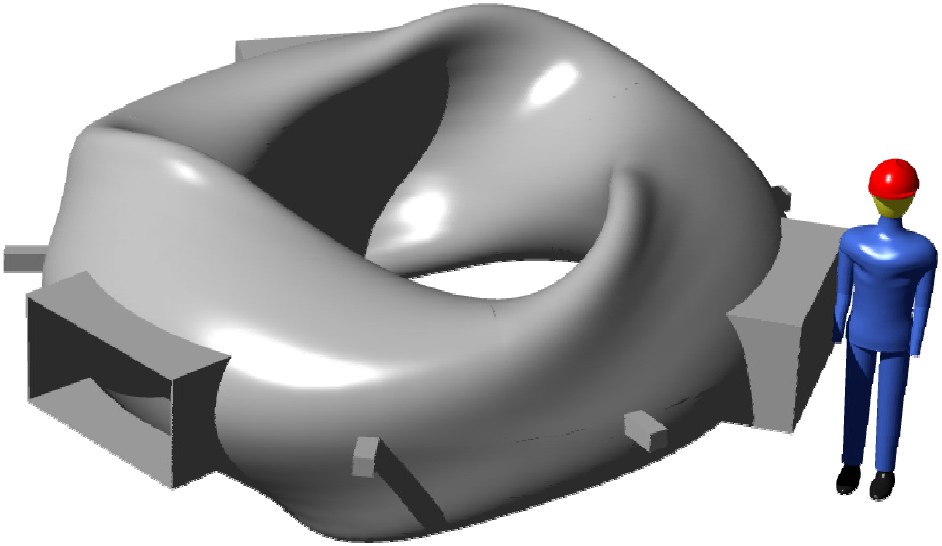

Vacuum Vessel Configuration

Dimensions in inches

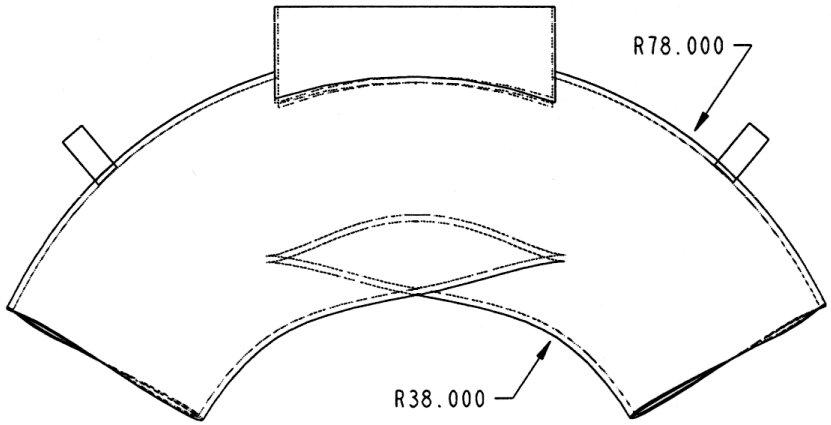

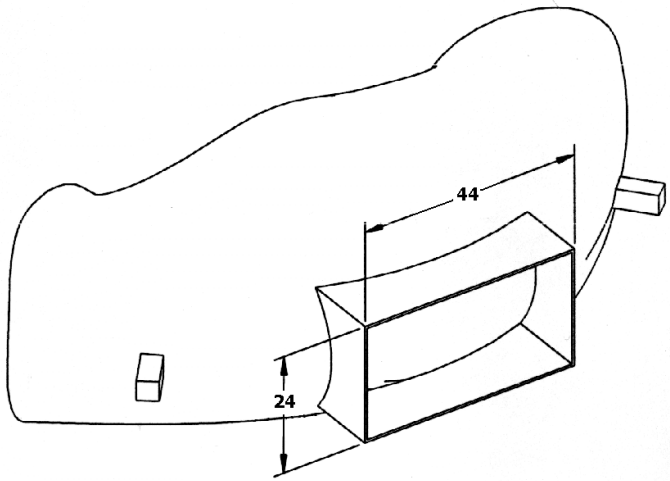

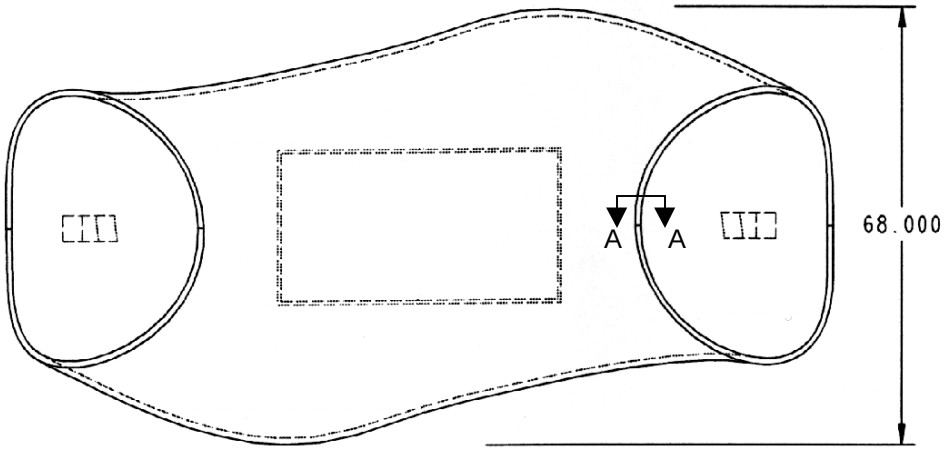

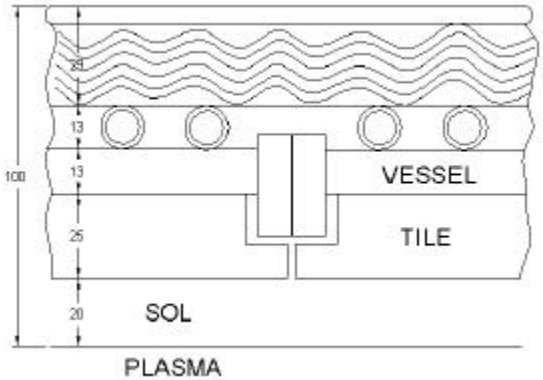

Section A-A

Dimensions in mm

What are primary open decisions for vacuum vessel?

Issue	Options	Comments	Risk	Resolution
Material	316L stainless	Current baseline, Permeability could be issue	*Medium* (may not meet permeability requirement)	Sharpen magnetic permeability requirement, **Check cost**
	Inconel 625	Stronger, thinner, more costly	*Low* (cost is main issue)	
Fabrication process	Break bending	Current baseline like WVII-AS	*Medium* (software must be developed)	Work with vendor for lowest cost option, after selecting material
	Explosive forming	like HSX	*High* (hard to predict tooling cost, schedule)	
	Casting, other process	like ??	*High* (vacuum quality casting tbd)	
Assembly	Procured and installed in one piece	Current baseline, best procurement option	*Low* (vessel ok before shipping)	Decide in conjunction with shell assembly concept
	3 pieces joined from inside	Offers more flexibility for shell assembly	*Medium* (vessel not checked prior to final assembly)	
Cooling / Heating fluid	Water / Steam	Should be cheaper, if corrosion not an issue	N/A	Resolution based on cost only
	Dowtherm	Used for NSTX	N/A	

Vacuum Vessel Design Issues

Material / Magnetic Permeability

Options -

- 316L Stainless Steel
  - Pro - Inexpensive, easy to machine
  - Con - Permeability increase due to cold work, welding
    - Inconel weld filler not compatible with 350-C

- Inconel 625
  - Pro - Better strength, higher resistivity, non-magnetic
  - Con - Higher cost, flange attachment

Status -

- Research of other facilities' design practice in progress

Device	Material	Magnetic Permeability	How Achieved
ATF	1/4-in 304 SS	1.02	Inconel Weld Filler
HSX	5/16-in 304 SS	1.02	Solution Anneal at 1900F, 2Hrs
W VII-AS	1/2-in SS		

Vacuum Vessel Design Issues

Fabrication

Options -

- Brake Forming
  Inexpensive, many vendors
- Explosive Forming
  Accurate shape, less welding

Status -

- Research of other facilities in progress
- Follow-up Design Show contacts
- Near Term R&D (Forming, Welding)

Vacuum Vessel Design Issues

W 7 - AS/X Fabrication

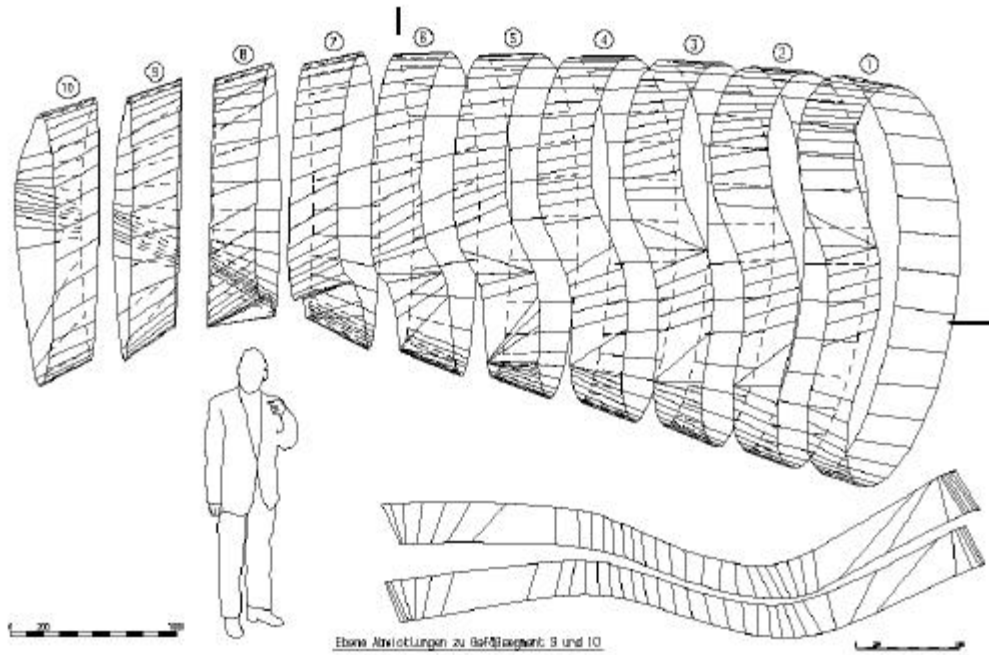

Fig. 5. Design principle of the outer and inner vacuum vessel for the W7-X cryostat.

Vacuum Vessel Design Issues

HSX Fabrication Experience
(Email from D. Anderson to J. Lyon, 3/2/99)

- Used preform composed of several rough pieces welded together
- Mold also several pieces to allow part removal
- Part was annealed prior to final shot in order to reduce magnetic permeability
- Vendor wanted $425k to build molds and develop process
- UW performed for $200k and lots of labor

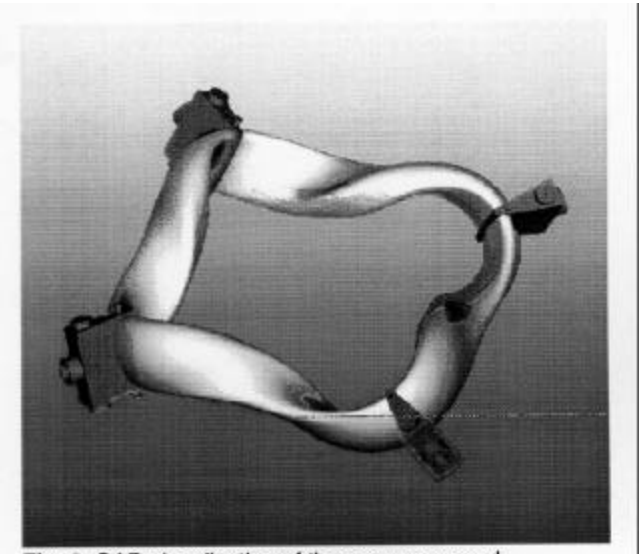

Fig. 2. CAD visualization of the vacuum vessel components.

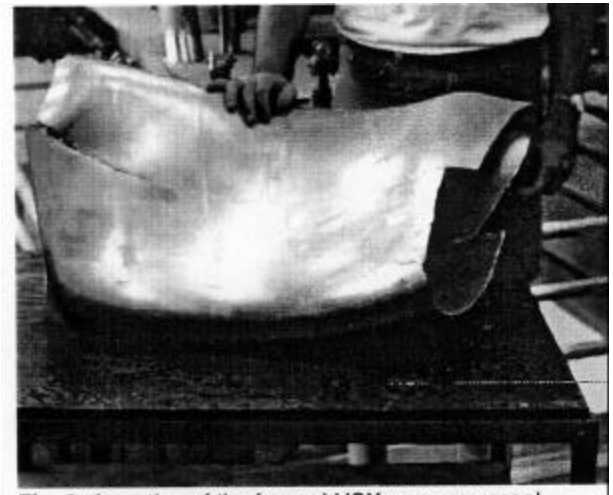

Fig. 3. A section of the formed HSX vacuum vessel.

Vacuum Vessel Design Issues

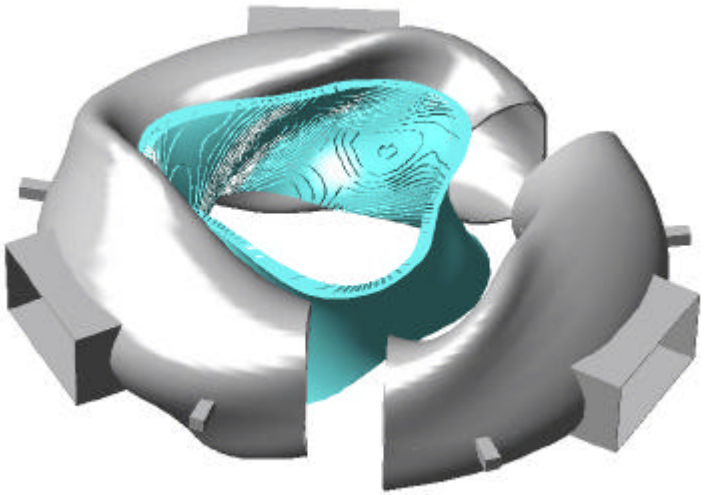

Assembly / Design Integration

Options -

- One Piece
  Best procurement option
- Three Pieces
  Coil structure design flexibility

Status - Can accommodate both options

Heating / Cooling

Options -

- Water/Steam
- DowTherm

Status - No work done

Helical Coil Configuration

Parameters:

Plasma Configuration	C10 - 2T
Coil Configuration	SAD185-16
# Coils / Half Period	13
Dist from Plasma to Coil	18-cm
Current / Coil	84-kA
Min Coil C/L Spacing	23-mm
Nominal Coil Dimensions	18 x 70-mm
# Turns / Coil	10
Min Coil Bend Radius	8-mm
Shortest Coil Length (1-turn)	0.4-m
Longest Coil Length (1-turn)	16.7-m
Total Length of Conductor	4080-m
Total Weight of 78 Coils	6000-lb

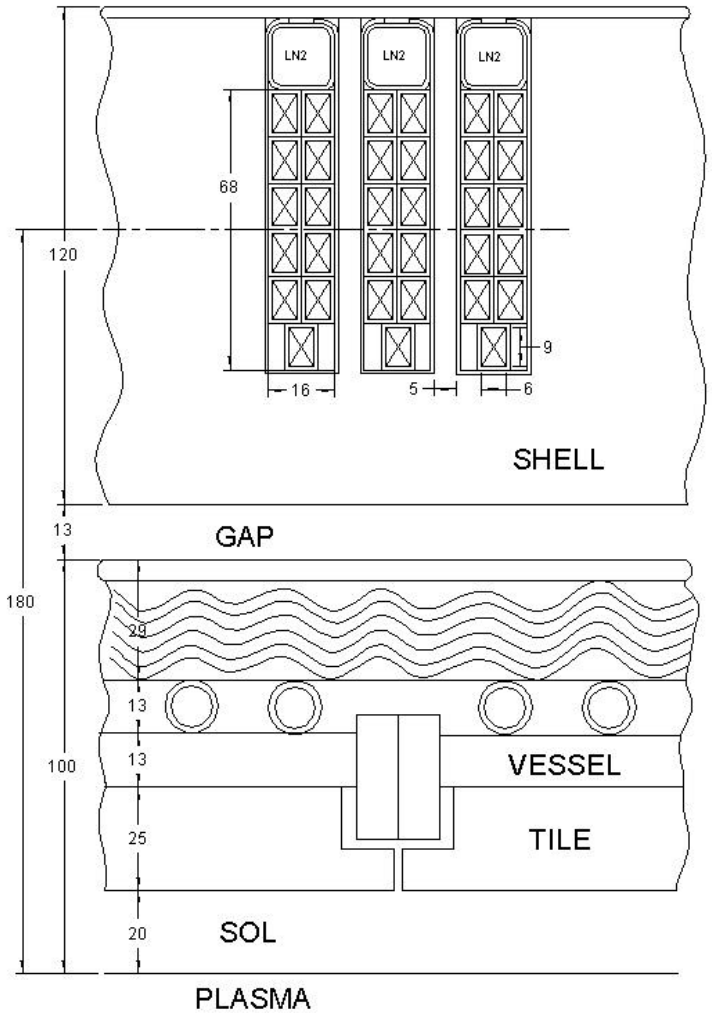

Helical Coil Configuration

C10 - SAD185-16

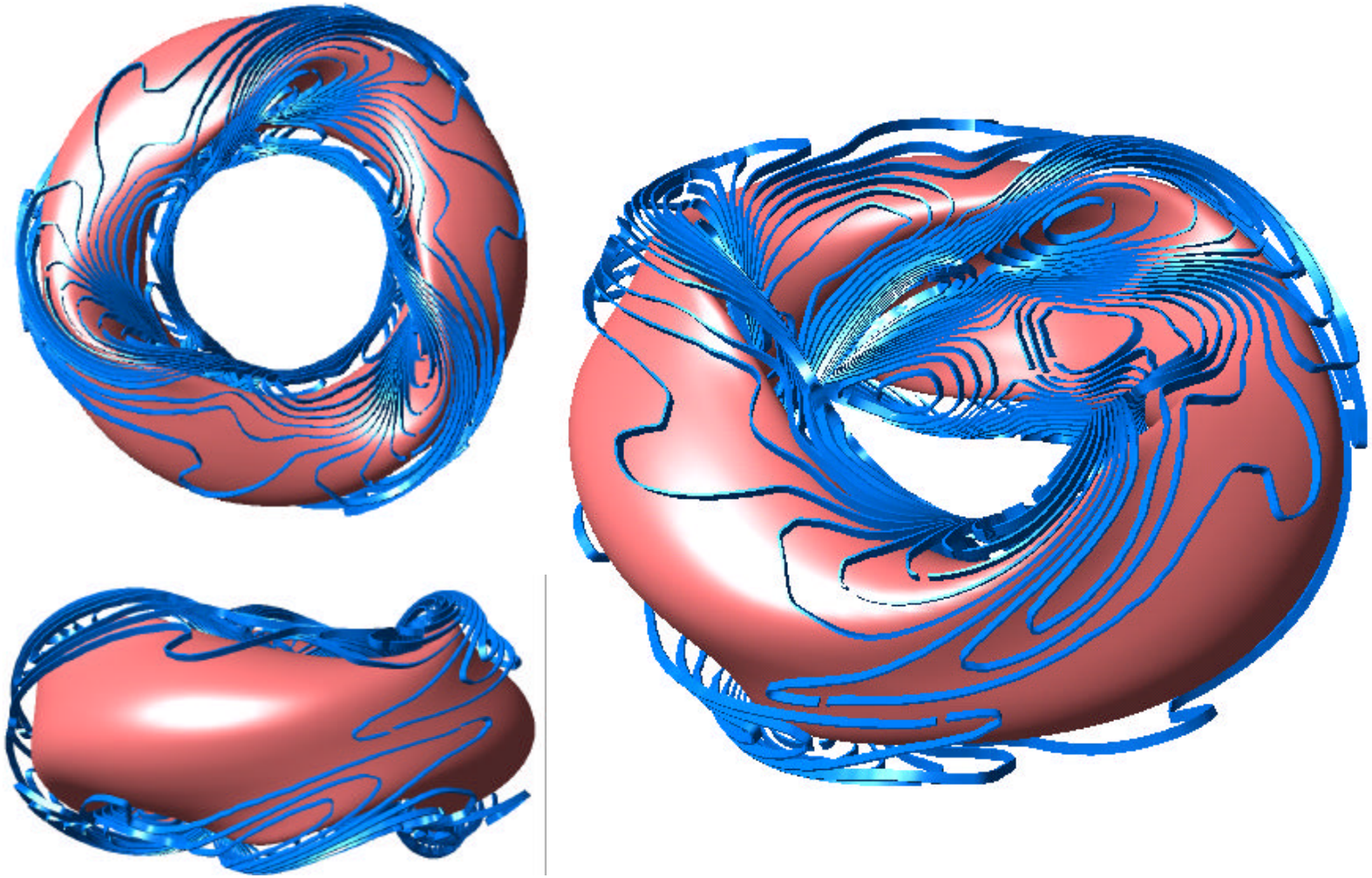

What are primary open descisions for saddle coil windings?

Issue	Options	Comments	Risk	Resolution
Conductor current density is too high due to close spacing of coils 3-D effects make grooves even tighter at root of bends	Reduce temperature of coil to increase pulse length	Expensive to sub-cool LN	*Low* (cost is main issue)	Check cost
	Reduce number of turns to increase packing fraction	Increases field errors, Conductor is harder to wind	*Med* (design of leads is more difficult, may not have winding solution)	Check feasibility of winding
	Fewer coils	Poor reconstruction	*High* (may not have workable coil set)	Must be resolved by physics
	Put coils closer to plasma	Can't go much closer than 18 cm	*High* (shell design, vv tolerances, therm insul. More difficult)	Check feasibility of reducing insulation thickness, gaps, etc.
	Put two saddles in one groove in tight regions	May have second order benefit, but cooling, winding accuracy may suffer	*Med* (machining details of groove may be tricky)	Must be resolved by physics
Cooling of conductor	Conduction to shell	Better use of space, depends on material of shell	*Low* (most straightforward concept)	Total cost for effective system
	Conduction to strap	Works for any material	*Med* (strap cooling not easy)	

Support Structure Configuration

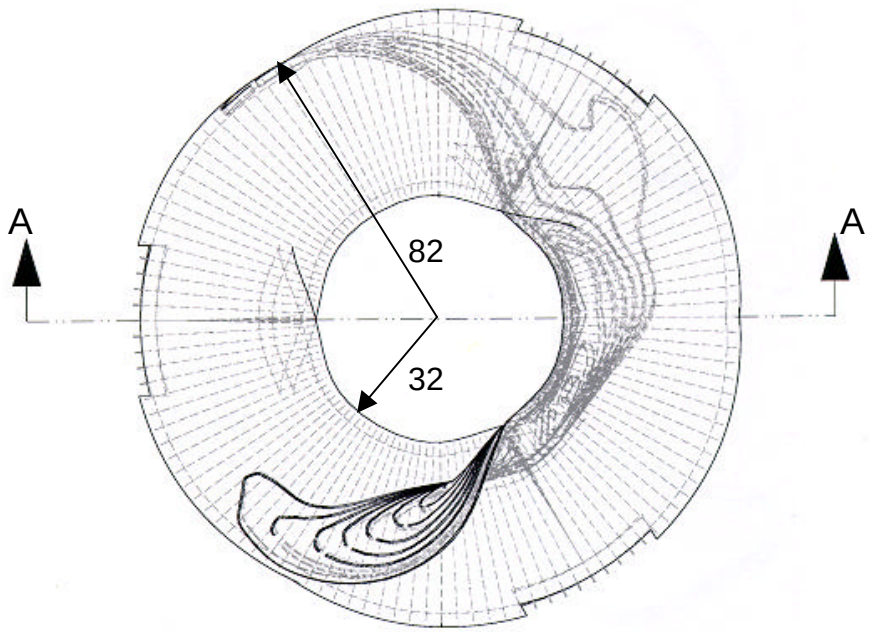

Parameters:

- Number of Wedge Patterns = 20
- Total Number of Wedges = 120
- Avg Pattern Dims = 50 x 70 x 4-in
- Avg Pattern Weight = 500-lb
- Avg Number of Holes/Pattern = 60
- Avg Number of Slots/Pattern = 40

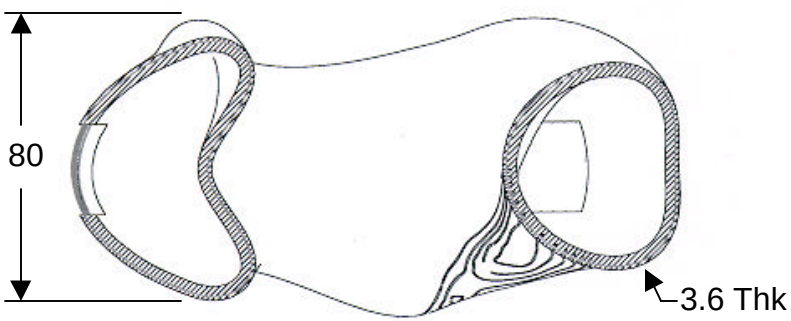

SECTION A-A

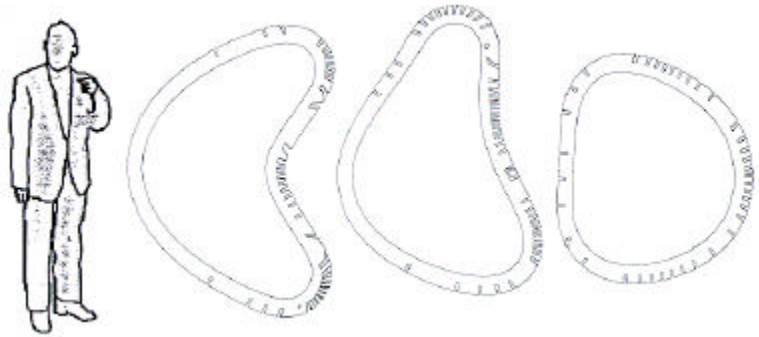

TYPICAL CROSS-SECTIONS

Support Structure Configuration

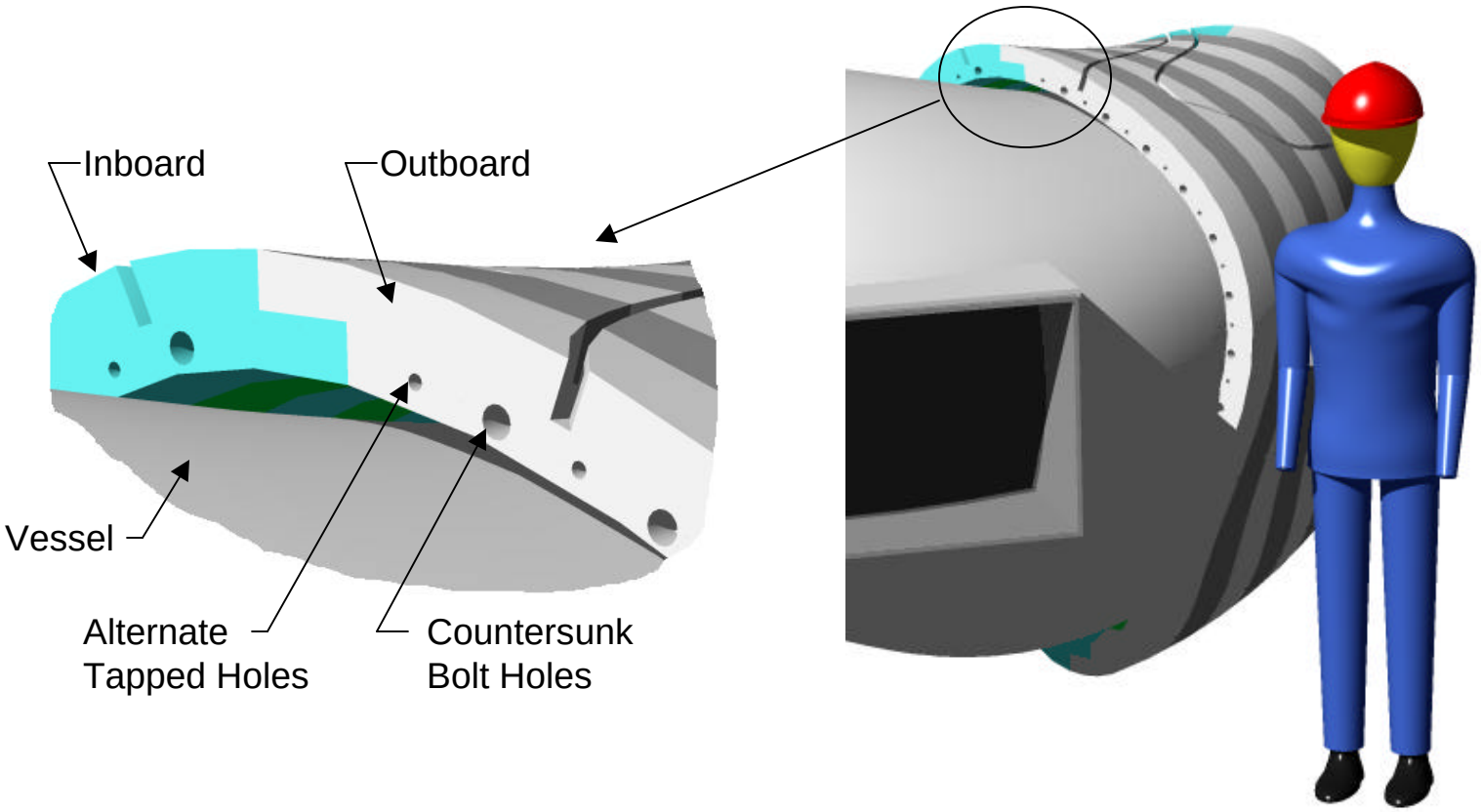

Support Structure Configuration

Dimensions in inches

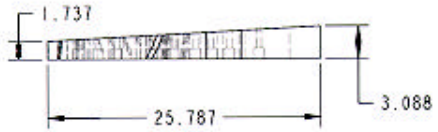

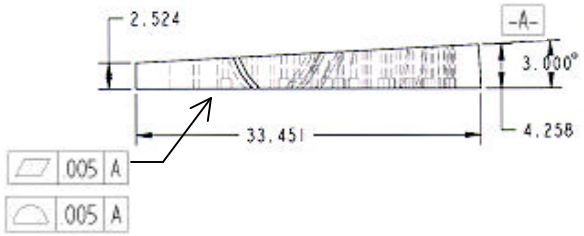

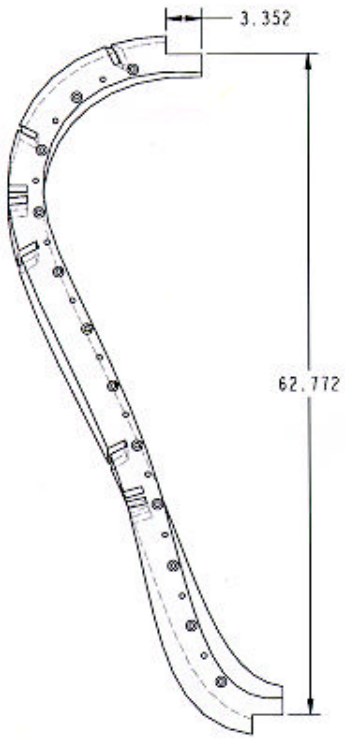

Inboard

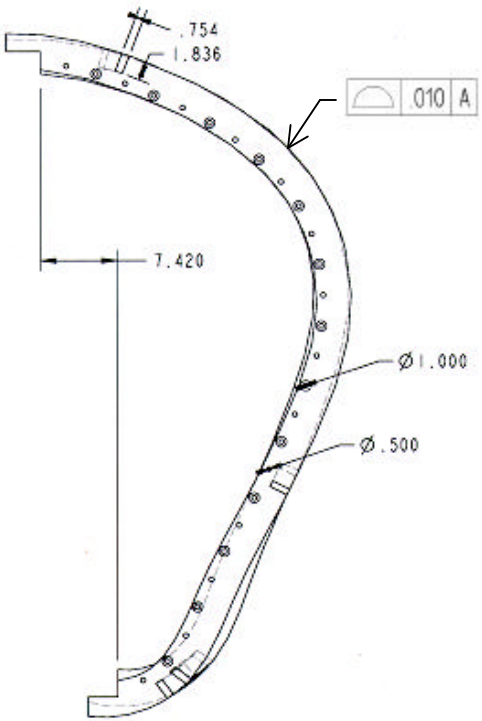

Outboard

What are primary open decisions for structural shell?

Issue	Options	Comments	Risk	Resolution
Fabrication option	Wedges	Material Fastening wedges together	*Med* (wedge joining main issue)	Must be resolved by combination of cost, risk, after defining consistent thickness parameters for each option
	Ribs with epoxy fill	Material properties, fastening ribs together, behavior of composite structure at LN temperature	*High* (Fill operation is high risk)	
	Structural shell with epoxy fill	Material properties, cost of two nested shells	*High* (same as above)	
Shell material	304L stainless	Good except for machining and thermal conductivity	*Low*	Work with fab shops for lowest total cost option
	Bronze alloy	Good, but hard to weld, may have permeability problem	*Med*	
	G-10	Low electrical conductivity, hard to machine, bad CTE	*High*	
	Graphite epoxy	Not clear	*High*	
Cooling	Closed loop	Safer, more complicated	*Med* (leaks)	Total cost for safe system
	Open loop	Like Alcator C-Mod	*Low* (leaks no problem)	

Coil Structure Design Issues

Material

Options -

Material	Mechanical	Electrical	Thermal	Fabrication
Al-Bronze	High Strength	High Conductivity	High Conductivity Low CTE	Good Machining Poor Welding
Aluminum	Low Strength	High Conductivity	High Conductivity High CTE	Good Machining Poor Welding
Epoxy	Low Strength	Low Conductivity	Low Conductivity High CTE	Poor Machining
Stainless Steel	High Strength	Low Conductivity	Low Conductivity Low CTE	Poor Machining Good Welding

Status -

- Continuing to evaluate thermal/structural performance
- Propose parametric evaluation (time const vs segmentation)

Shell time constant considerations

- Baseline requirement is 10 milli-seconds
- Implications for shell design

  Aluminum is eliminated as material option
  Bronze shell must be broken into ~ 100 rib pieces
  Machining can be done before or after rib assembly

- Implications for shell design if limit is relaxed

  Contoured casting may be substituted for rib design, which eliminates most joints
  May be possible to re-visit aluminum, which is preferred material for machining

- Calculation of field error as a function of segmentation would be useful to design process

Helical Coil Structure Design Issues

Fabrication

Options -

- Bolted Metal Wedges
- Ribs with Cast Epoxy Fill
- Shell with Cast Epoxy Fill

Status -

- Performed Loads/Structural Analysis for 2-T Case
- Moderate Stresses may Preclude Options #2, #3

Field/Force Calculation Model

Fields calculated using volume integration of 20-node isoparametric elements (MAGFOR)

Present model has 9190 hex elements, 64 gauss points per element

Saddle coil elements generated using ProE “.ibl” files

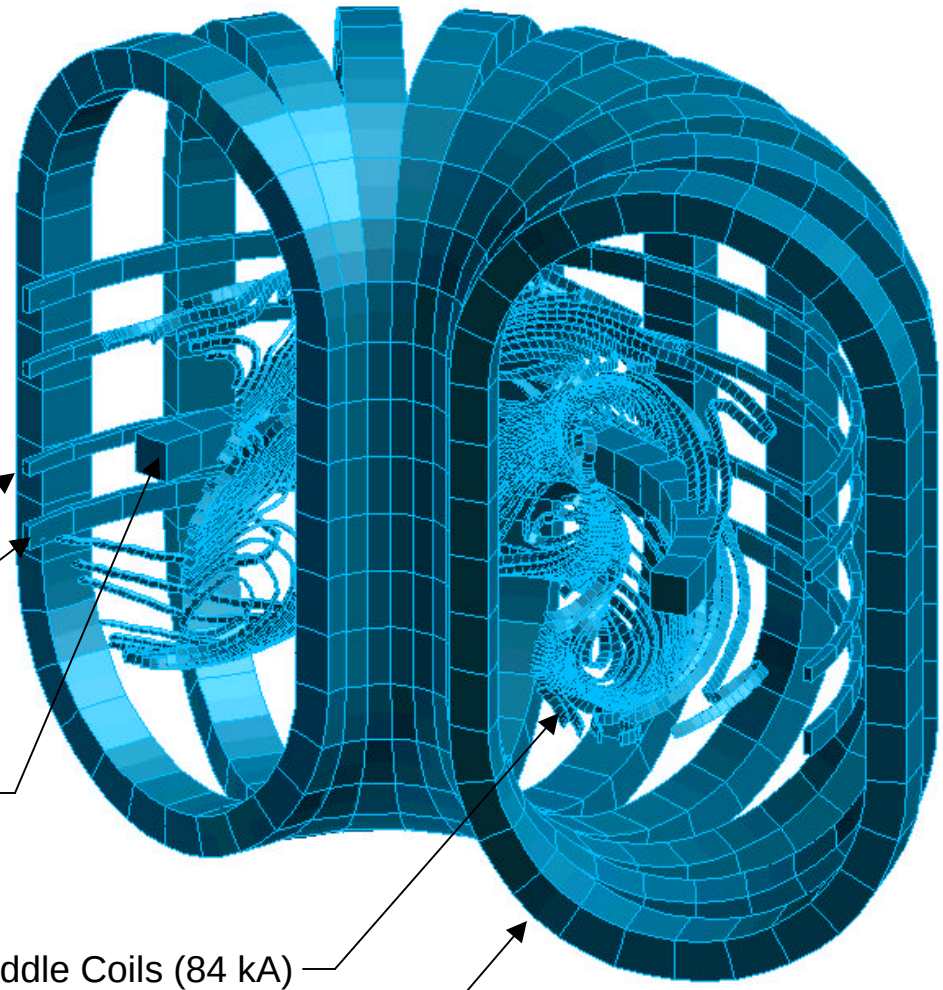

Field Vectors for One Half-Period Saddle Coils

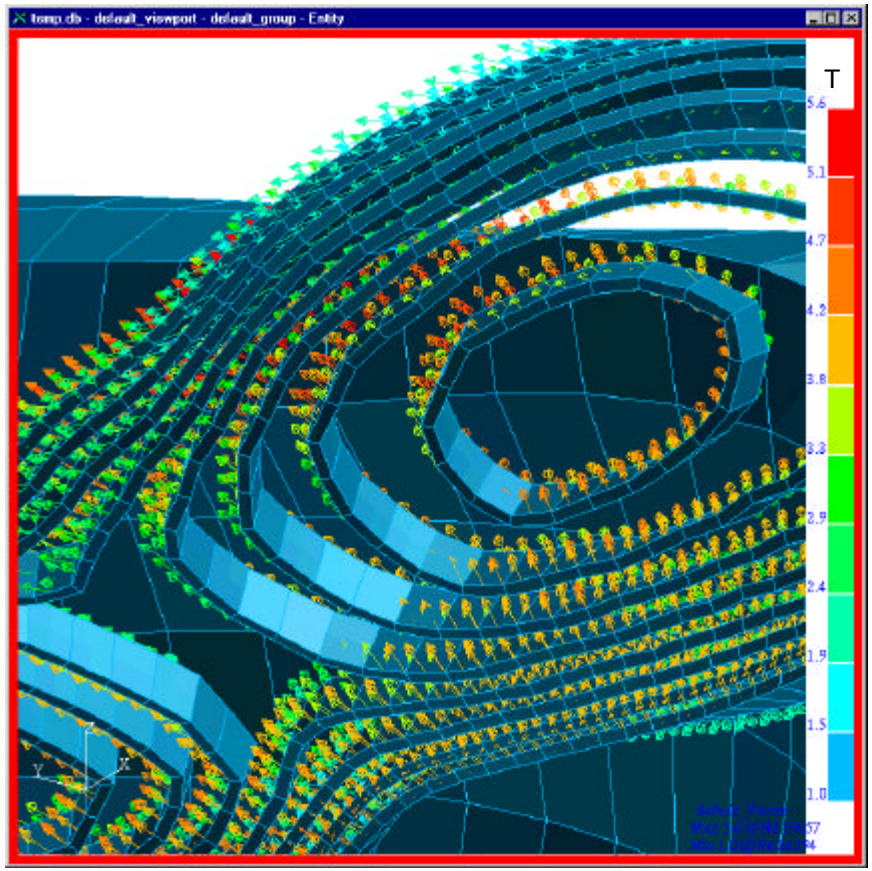

View

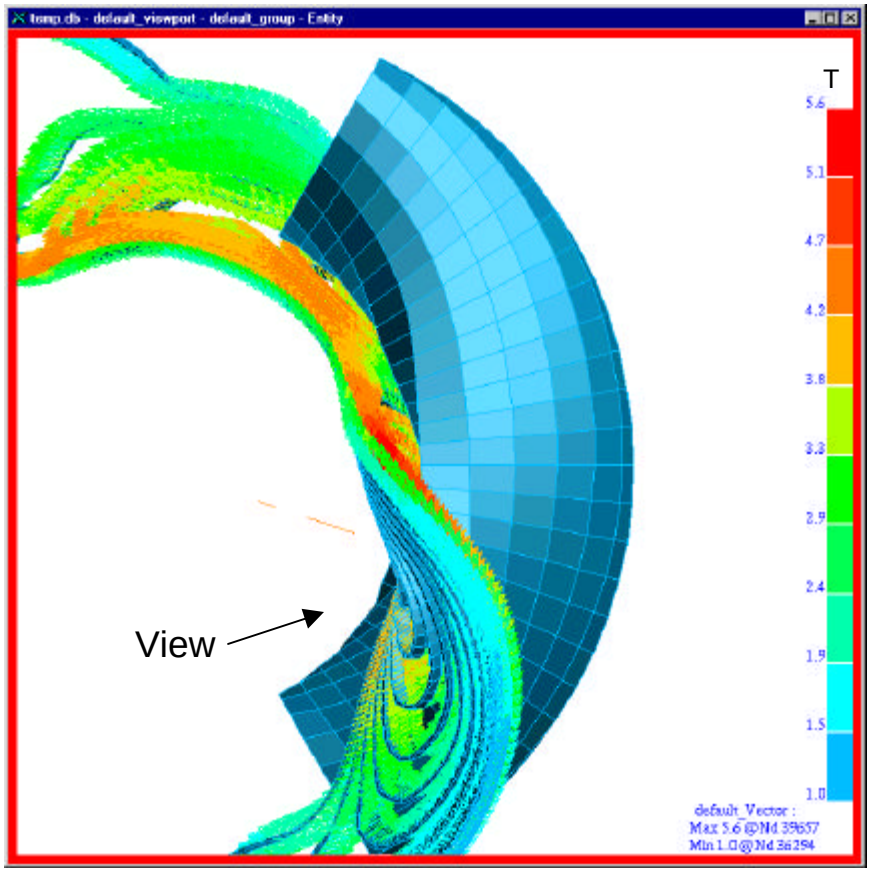

Force Due To Toroidal Field

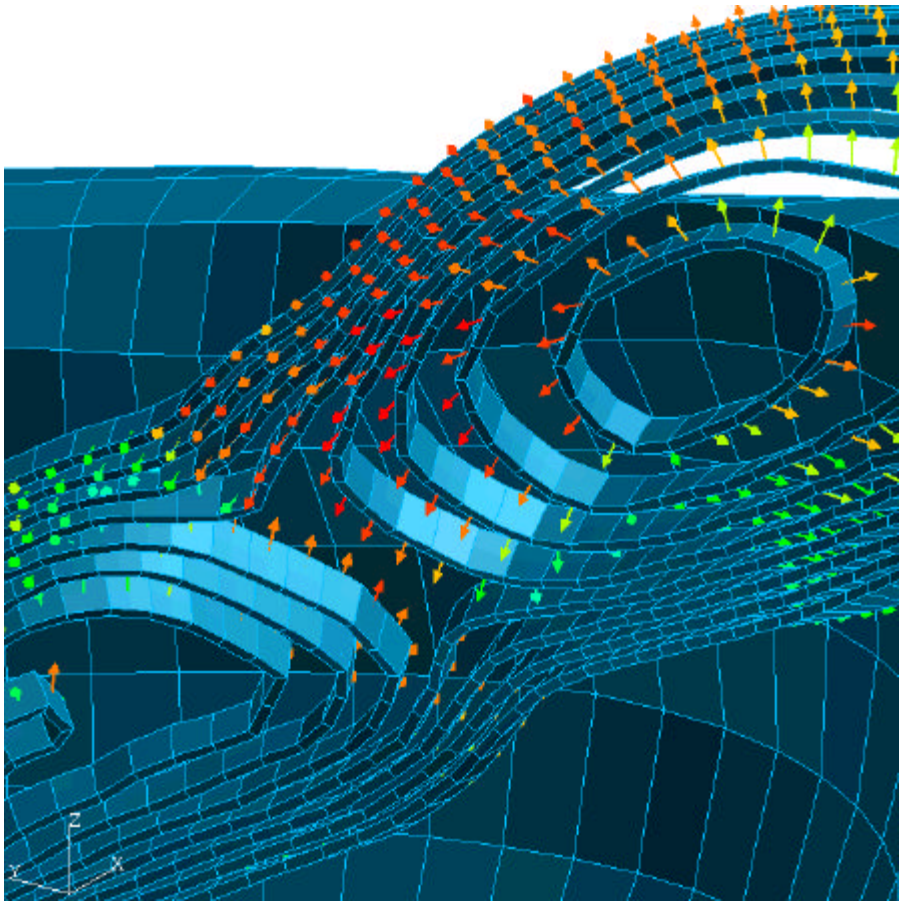

View Inside Looking Out

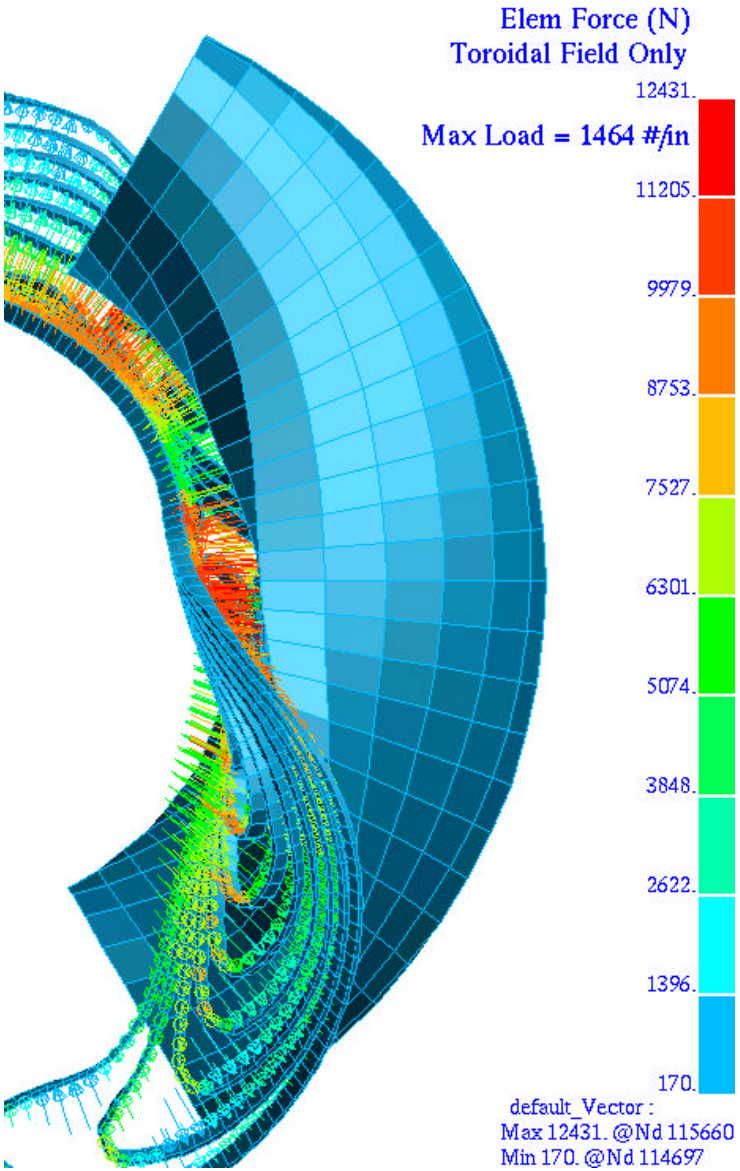

Saddle Coil #1 Force/Deflection

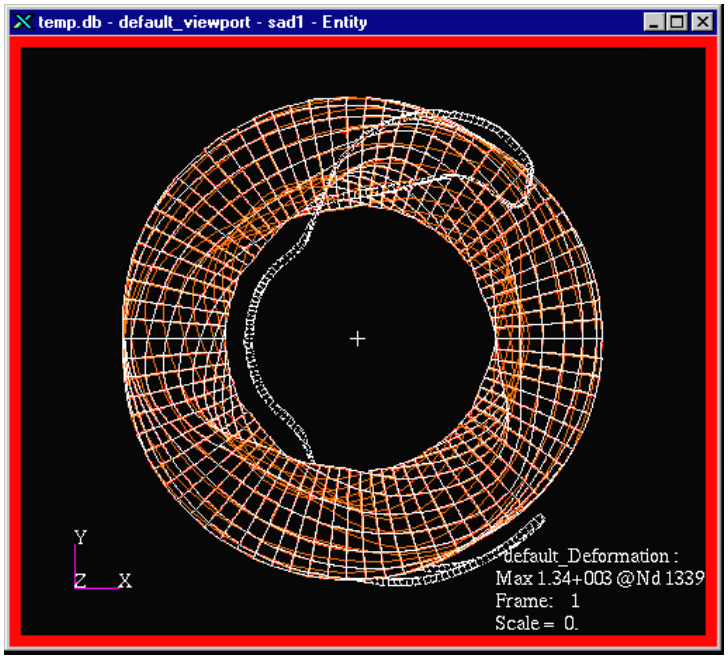

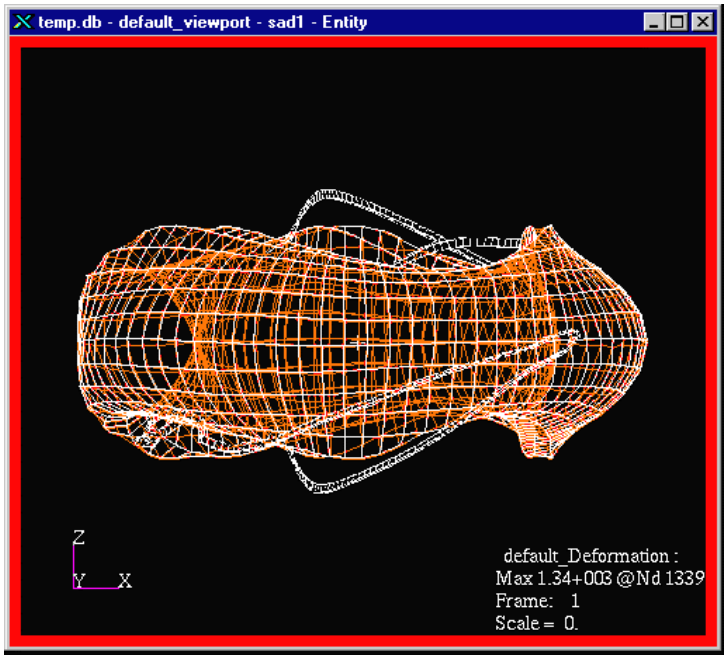

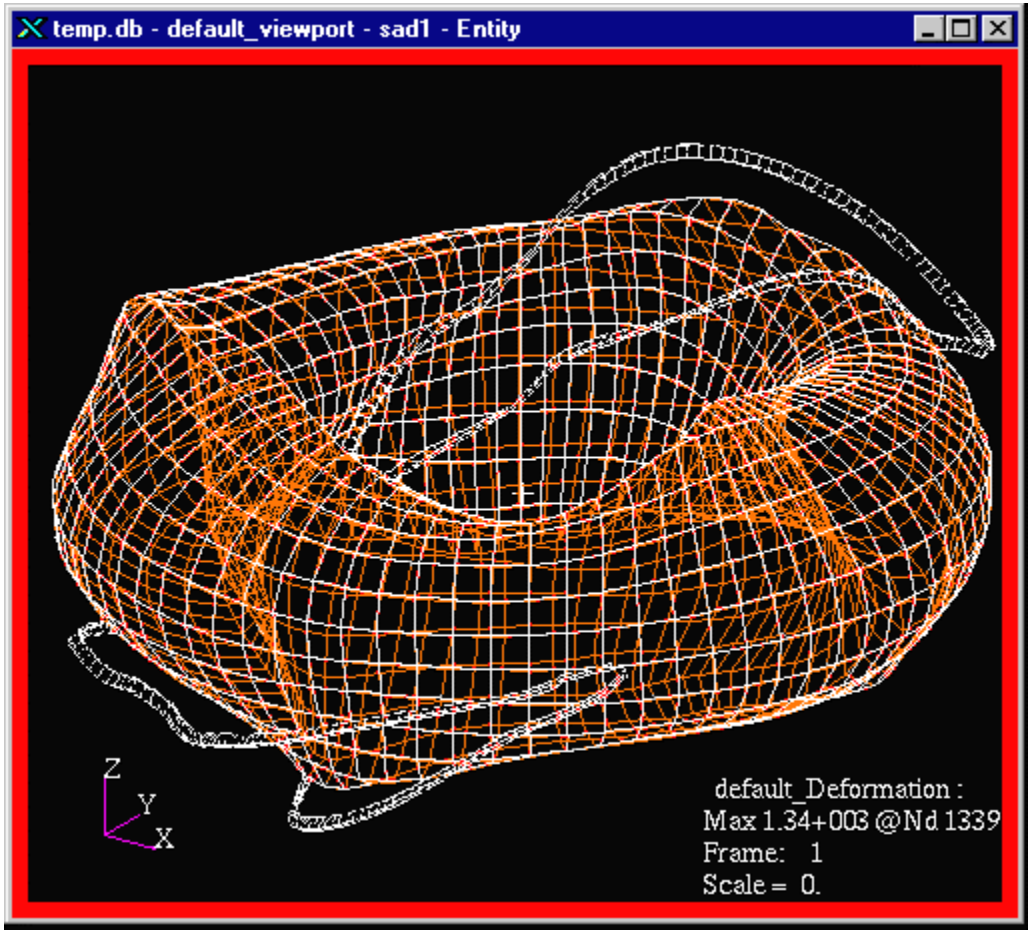

Saddle Coil #1 Force/Deflection

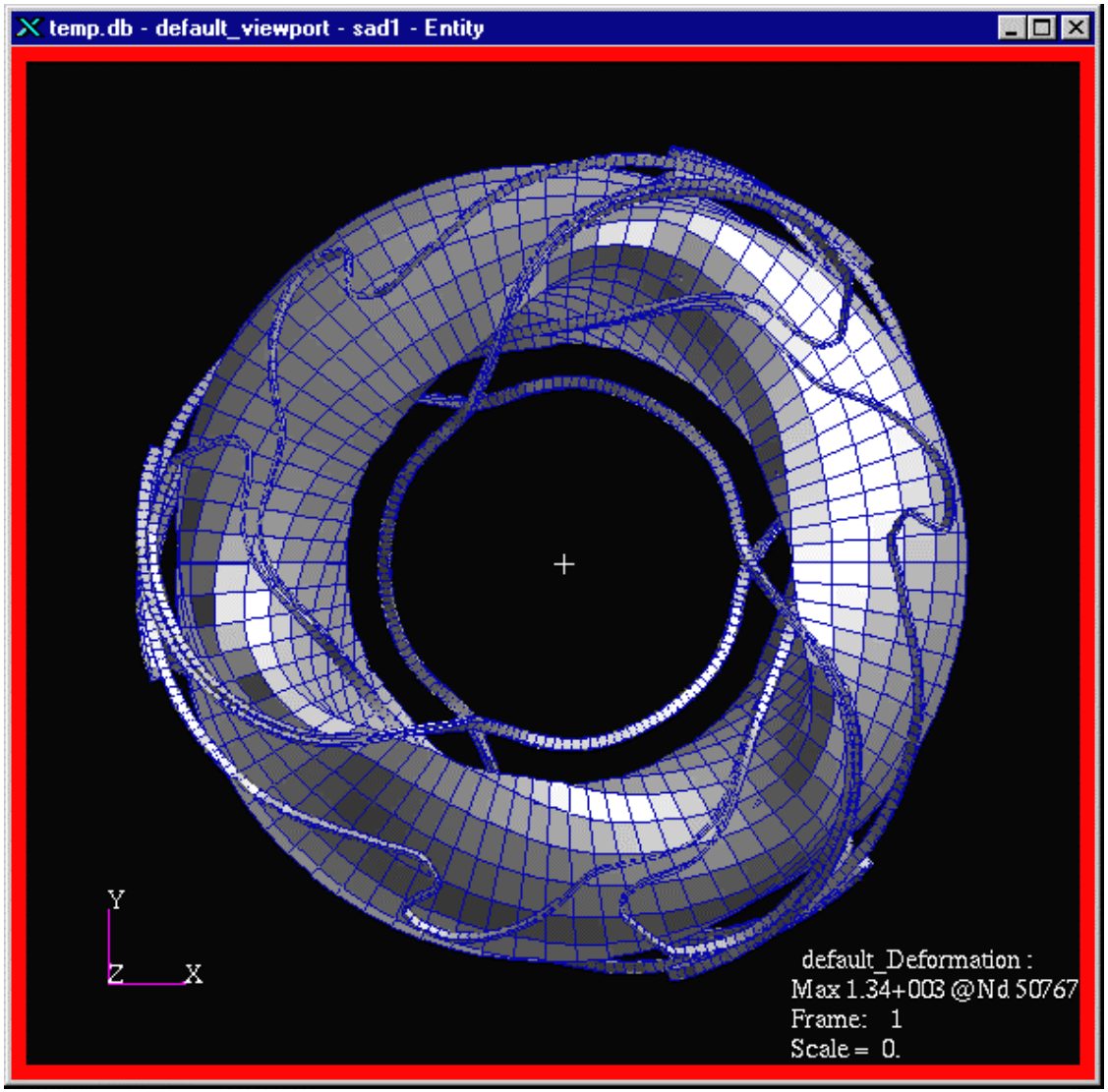

Force Summation for Saddle Coil Groups

Case	FX	FY	FZ
Saddle Group #3	95733	-1730100	-101780
Saddle Group #4	95736	1730100	101760
Saddle Groups #3,4	191470	20	-21
Groups #3,4, 1-Period Trim	778114	-2778	24965
All Saddles, #1-6	-2	13	-66
All Saddles, 1-Period Trim	-767370	-2050	-880
All Saddles, 1-Period Trim, Z<=0	-375150	1768500	-1273200
All Saddles, 1-Period Trim, Z>=0	-373150	-1770500	1272300

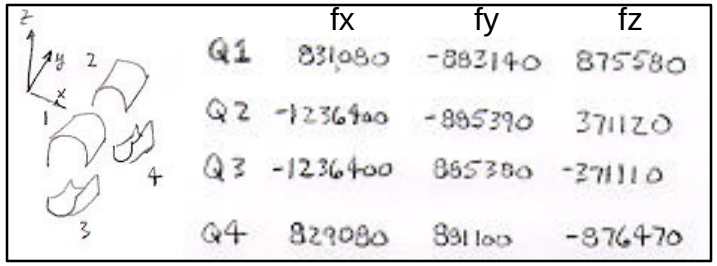

	fx	fy	fz
Q1	831080	-883140	875580
Q2	-1236400	-885390	371120
Q3	-1236400	885380	-371110
Q4	829080	881100	-876470

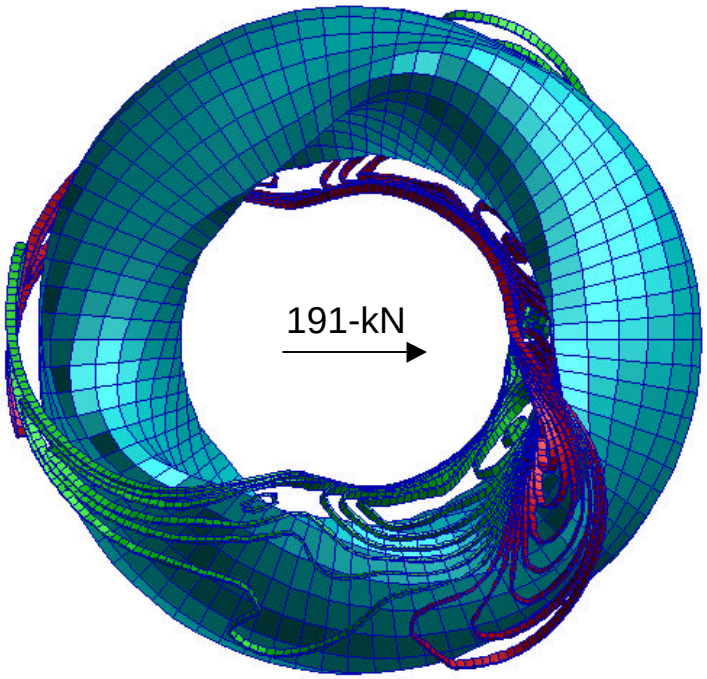

Saddle Groups #3,4

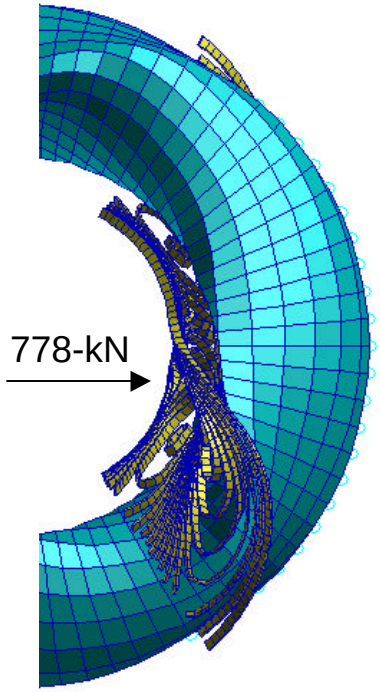

Trimmed to One-Period

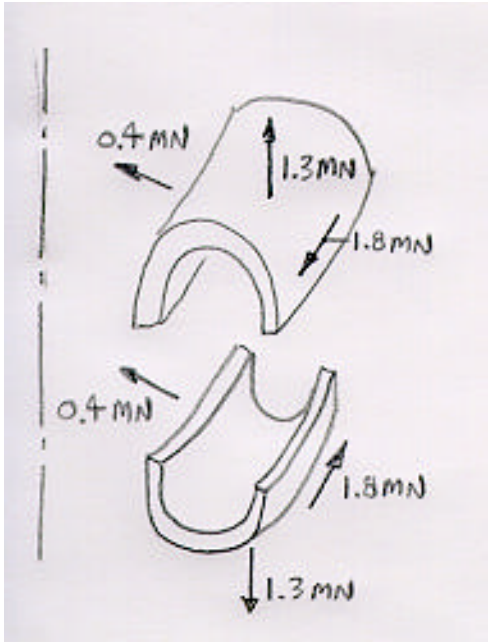

Top/Bottom

Support Structure Displacement

- C10-2T Load Case (Max Load = 1963-lb/in)
- Net Force / Period = -767-kN (radial)
- Maximum Displacement = 0.6-mm

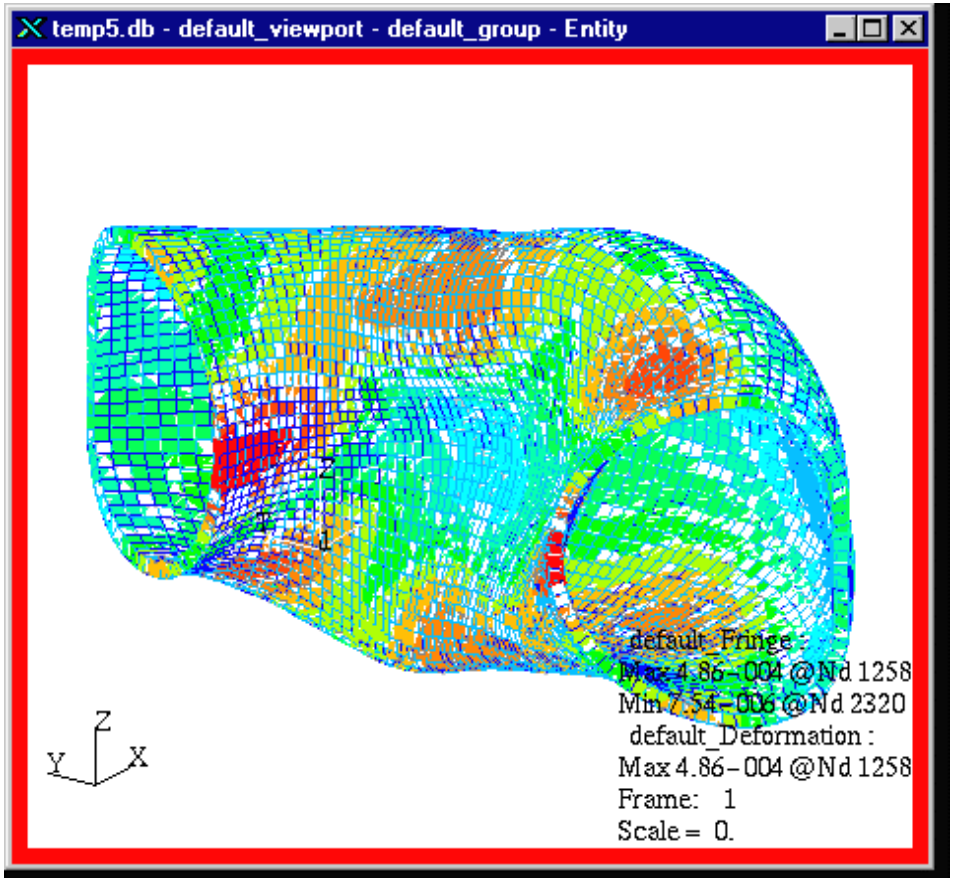

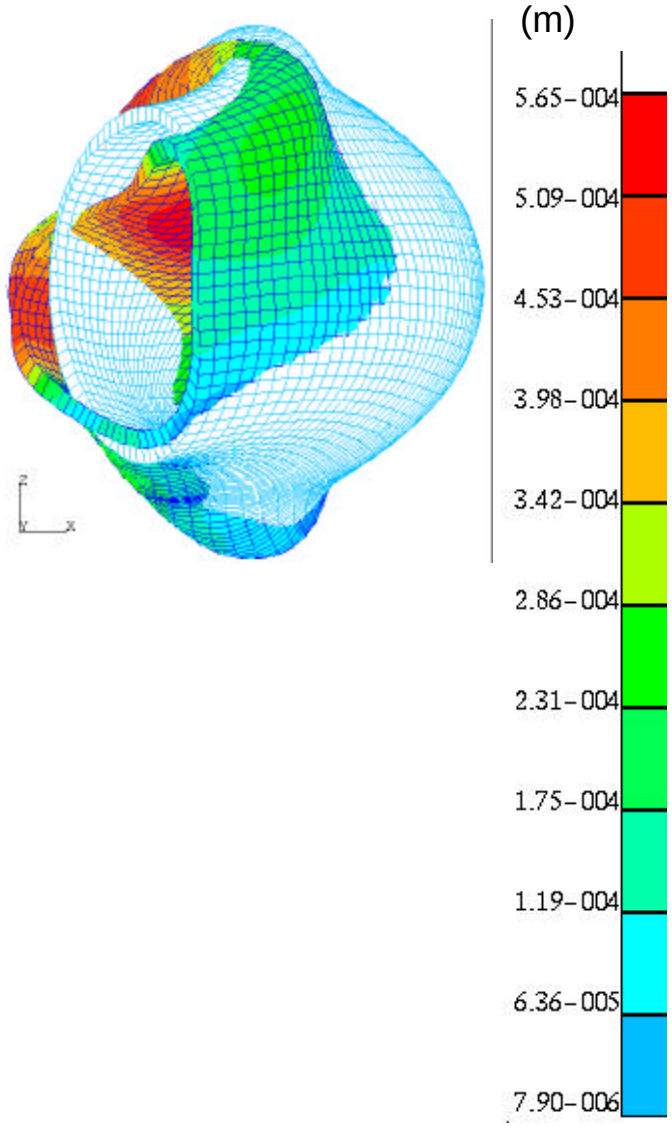

Support Structure Stress

- Max Stress = 65-Mpa
- Peak Stress at Supports

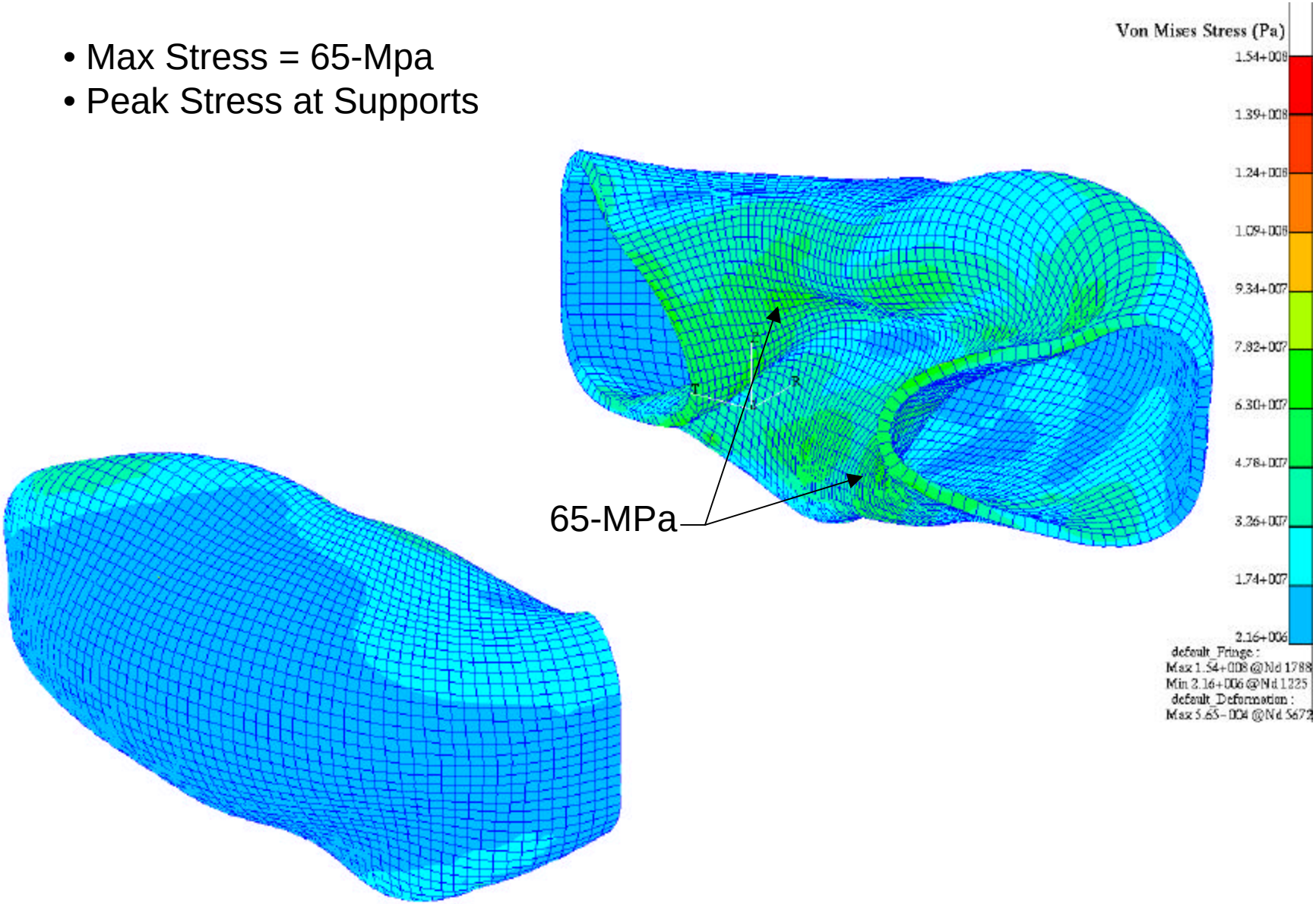

Support Structure Bolt Load Estimate

- BAR elements between left/right wedges
- Structure supported at bottom
- Element spacing = 2.4-inch

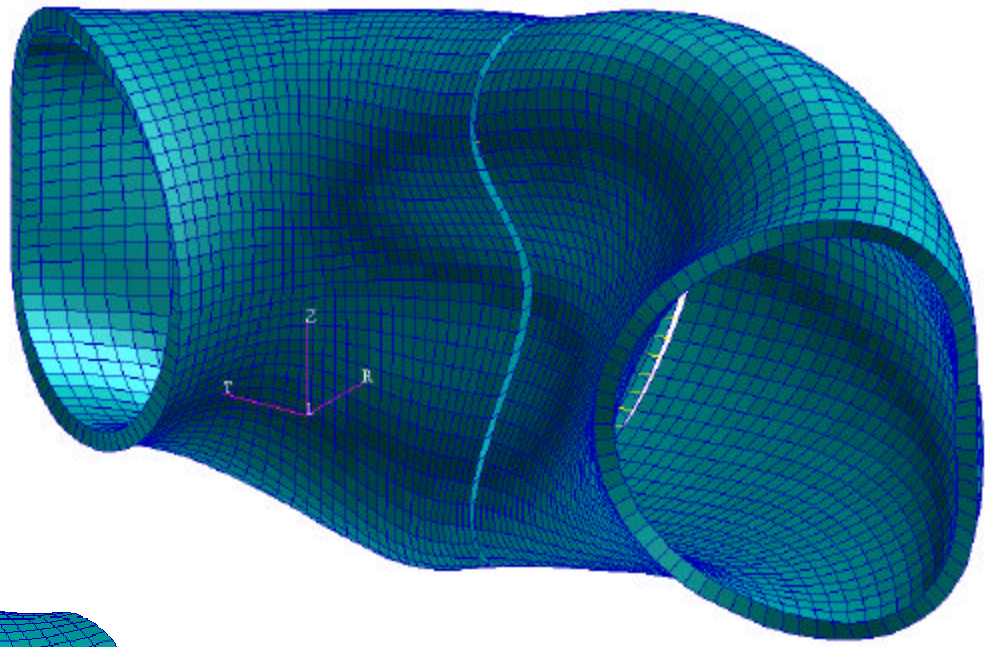

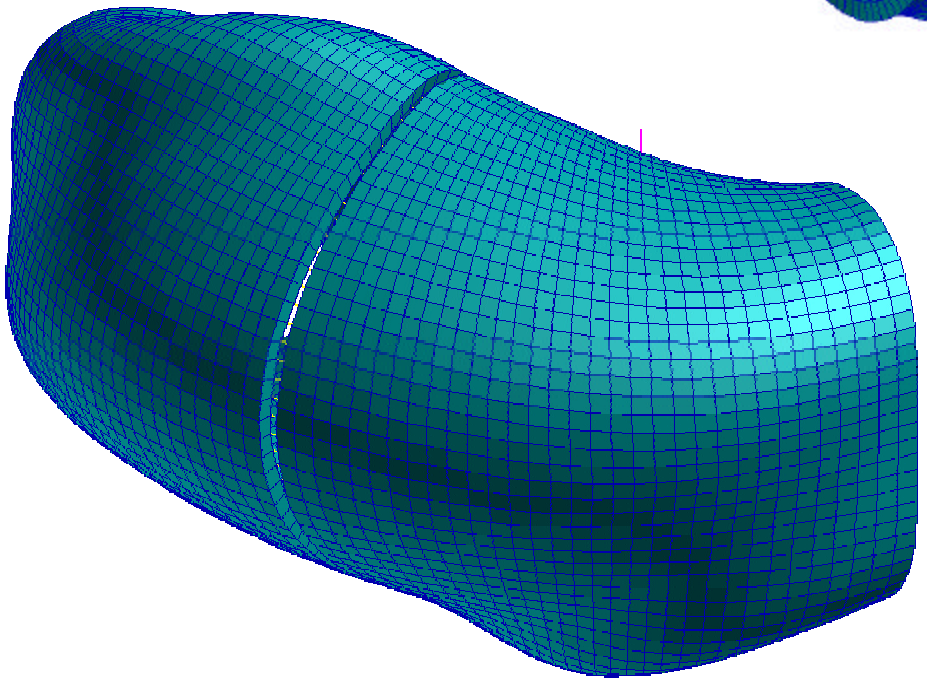

Support Structure Bolt Load Estimate

- Max force = 52-kN (shear), 34-kN (axial)
- Larger bolt diam required inboard
- Outboard bolt spacing can be increased

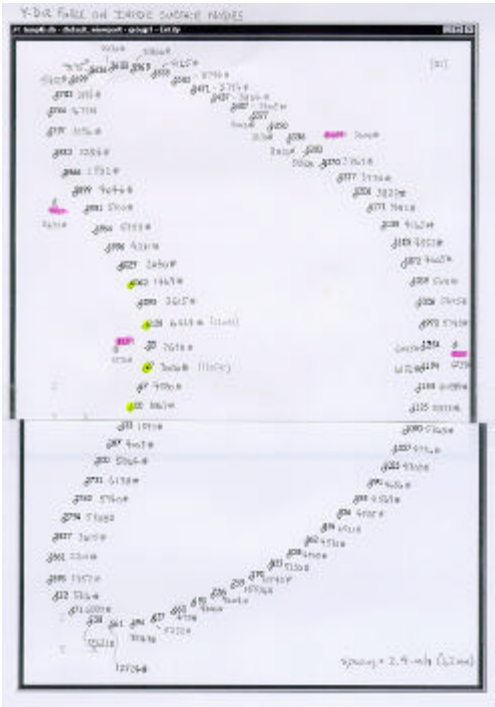

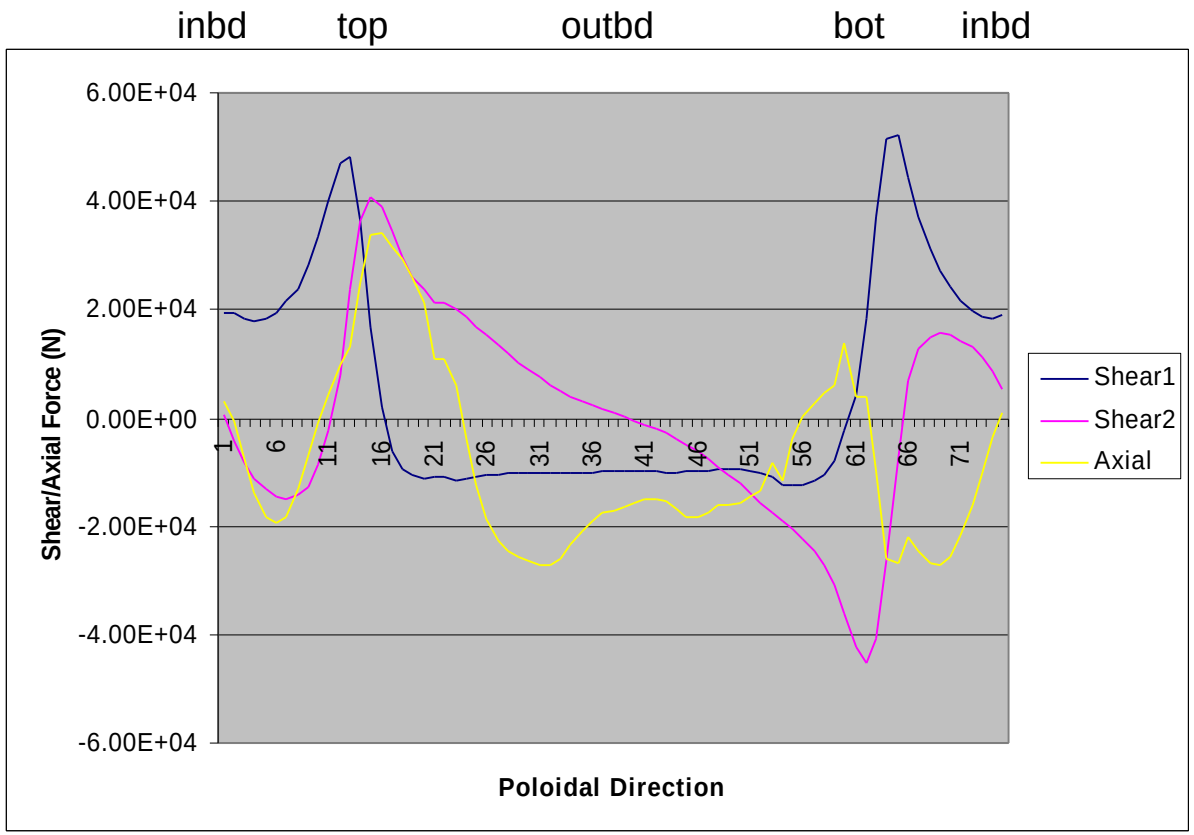

Shell fabrication options, risk evaluation

- Three options compared for total schedule

  Wedges
  Ribs and epoxy fill
  Double shell with fill

- Schedules assumed single shift, 40 hour weeks

- Largest potential risk identified for each option:

Wedges	wedge will not fit and must be re-machined
Ribs and epoxy fill	epoxy fill operation is a failure
Double shell with fill	epoxy fill operation is a failure

- With no problems, schedules were similar but the wedge concept was more forgiving of major problem

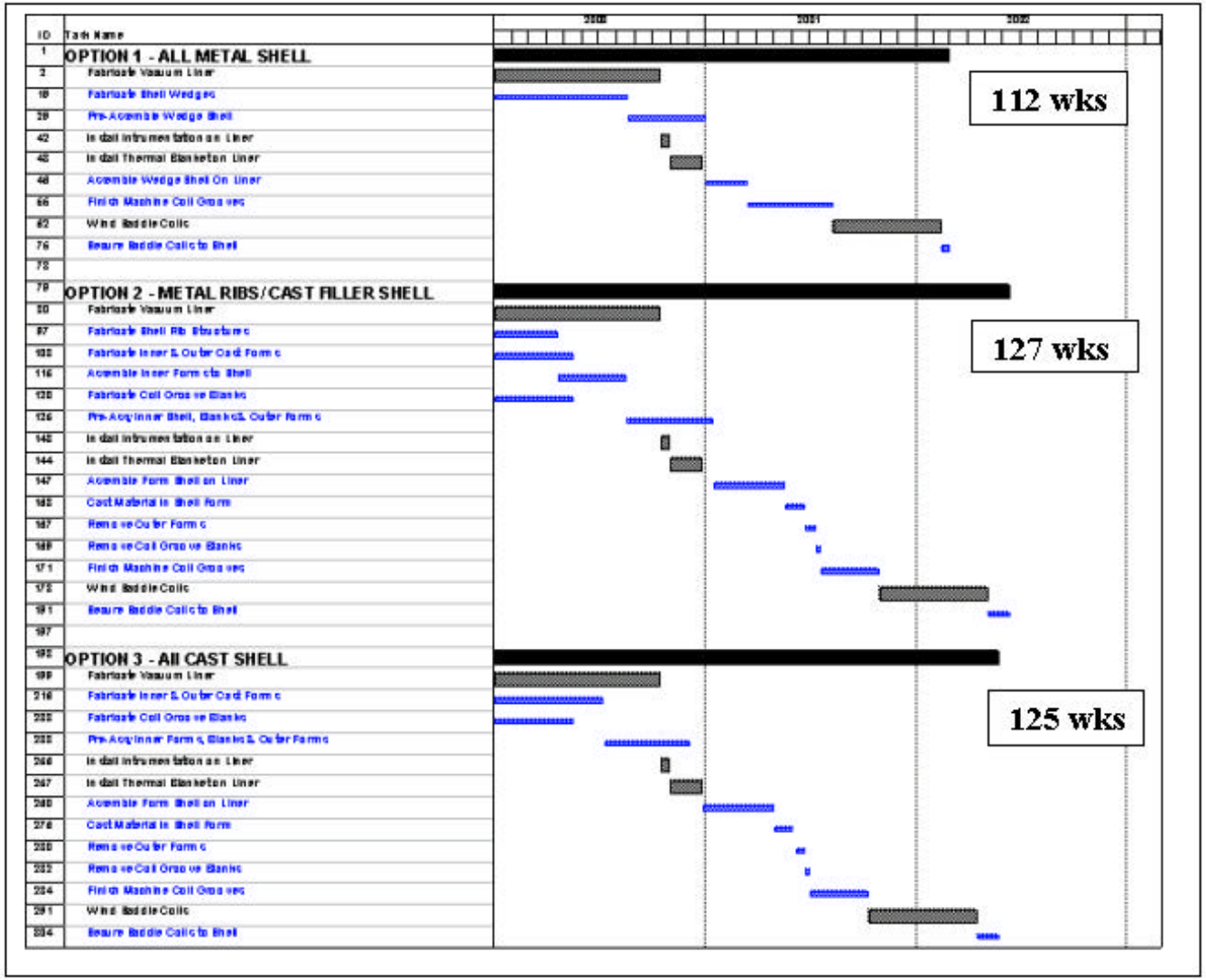
ID
Task Name
2000
2001
2002
1
OPTION 1 - ALL METAL SHELL
2
Fabricate Vacuum Liner
18
Fabricate Shell Wedges
39
Pre-Assemble Wedge Shell
42
Install Instrumentation on Liner
45
Install Thermal Blanketon Liner
48
Assemble Wedge Shell On Liner
66
Finish Machine Coil Grooves
72
Wind Saddle Coils
76
Secure Saddle Coils to Shell
78
112 wks
79
OPTION 2 - METAL RIBS/CAST FILLER SHELL
80
Fabricate Vacuum Liner
87
Fabricate Shell Rib Structures
93
Fabricate Inner & Outer Cast Forms
116
Assemble Inner Forms to Shell
120
Fabricate Coil Groove Blanks
126
Pre-Assy Inner Shell, Blanks & Outer Forms
143
Install Instrumentation on Liner
144
Install Thermal Blanketon Liner
147
Assemble Form Shell on Liner
165
Cast Material in Shell Form
167
Remove Outer Forms
169
Remove Coil Groove Blanks
171
Finish Machine Coil Grooves
172
Wind Saddle Coils
191
Secure Saddle Coils to Shell
127 wks
197
195
OPTION 3 - All CAST SHELL
199
Fabricate Vacuum Liner
216
Fabricate Inner & Outer Cast Forms
222
Fabricate Coil Groove Blanks
233
Pre-Assy Inner Forms, Blanks & Outer Forms
246
Install Instrumentation on Liner
247
Install Thermal Blanketon Liner
260
Assemble Form Shell on Liner
278
Cast Material in Shell Form
280
Remove Outer Forms
282
Remove Coil Groove Blanks
284
Finish Machine Coil Grooves
291
Wind Saddle Coils
294
Secure Saddle Coils to Shell
125 wks

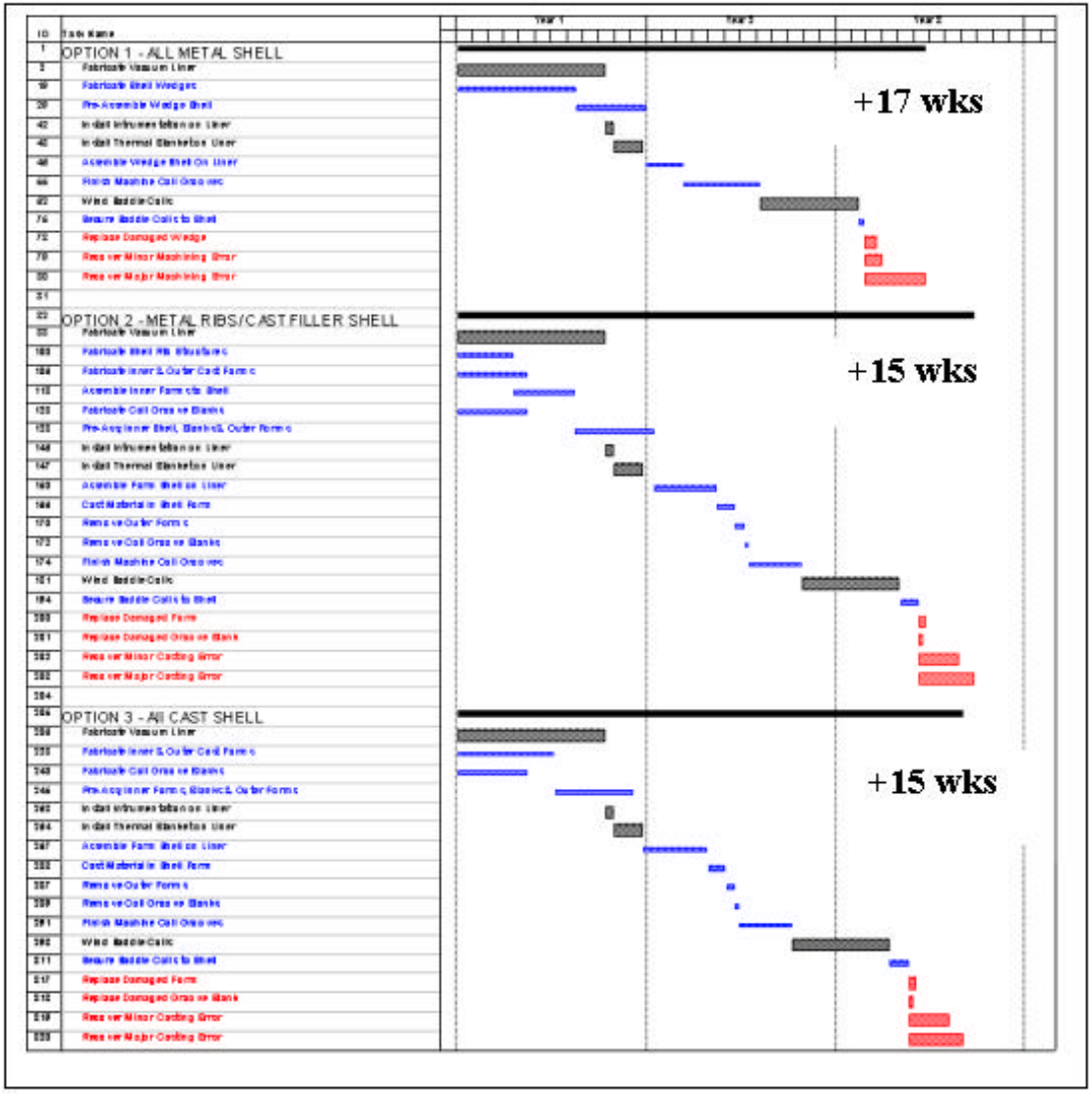
ID
Task Name
Year 1
Year 2
Year 3
OPTION 1 - ALL METAL SHELL
+17 wks
OPTION 2 - METAL RIBS/CAST FILLER SHELL
+15 wks
OPTION 3 - All CAST SHELL
+15 wks

Helical Coil Structure Design Issues

<u>Assembly</u>

Options -

- One Piece Vacuum Vessel
  Best procurement option
- Three Pieces
  Coil structure design flexibility

Status -

- Both look feasible for vessel
- Continue structural evaluation
- Investigate cost/schedule of options

Helical Coil Structure Design Issues

Assembly Option

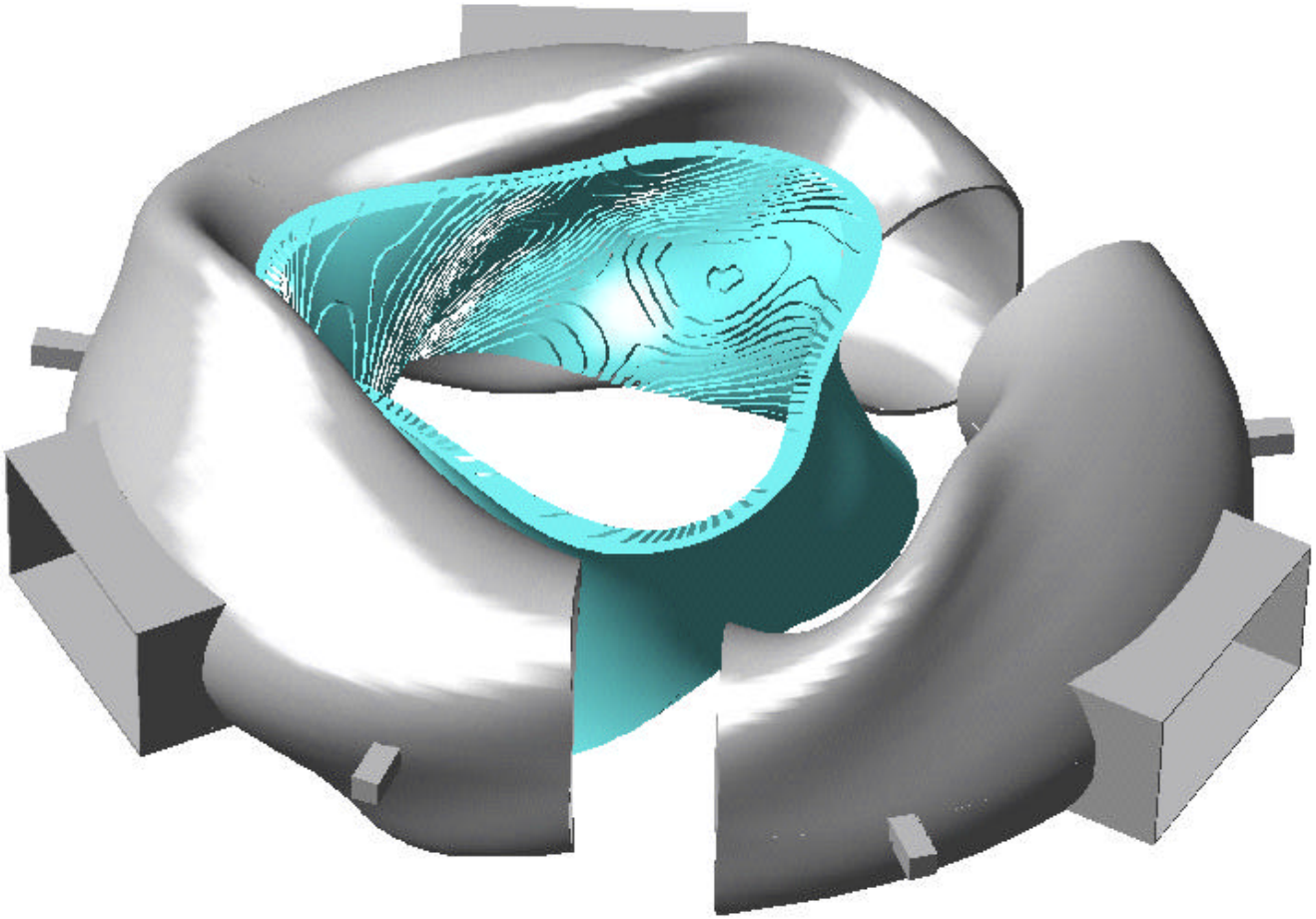

Helical Coil Structure Design Issues

Assembly Option

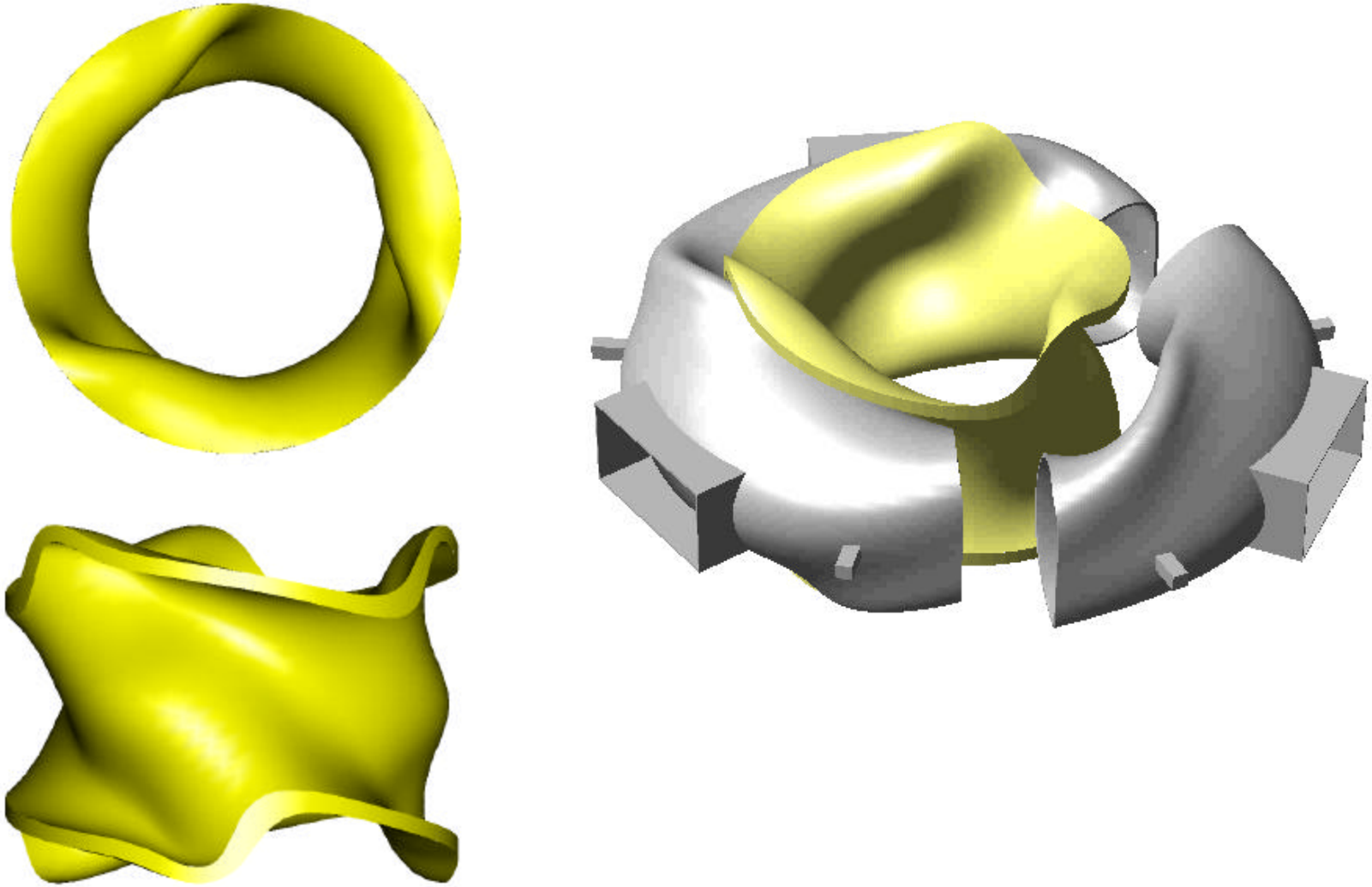

Helical Coil Structure Design Issues

<u>Cooling</u>

Options -

- Copper straps in slots, attach to cooling line
- Conduction to shell

Status -

- Conduction to shell is preferred
  Save slot space, less expensive
- Depends on shell material selection

Helical Coil Structure Design Issues

Coil Cover Plate

Options -

- Small Plates Welded/Bolted to Shell
- Cylindrical Structure with Epoxy and/or Compacted Fill

Status -

- Requires Structural Analysis

Helical Coil Structure Design Issues

Coil Cover Plate Option

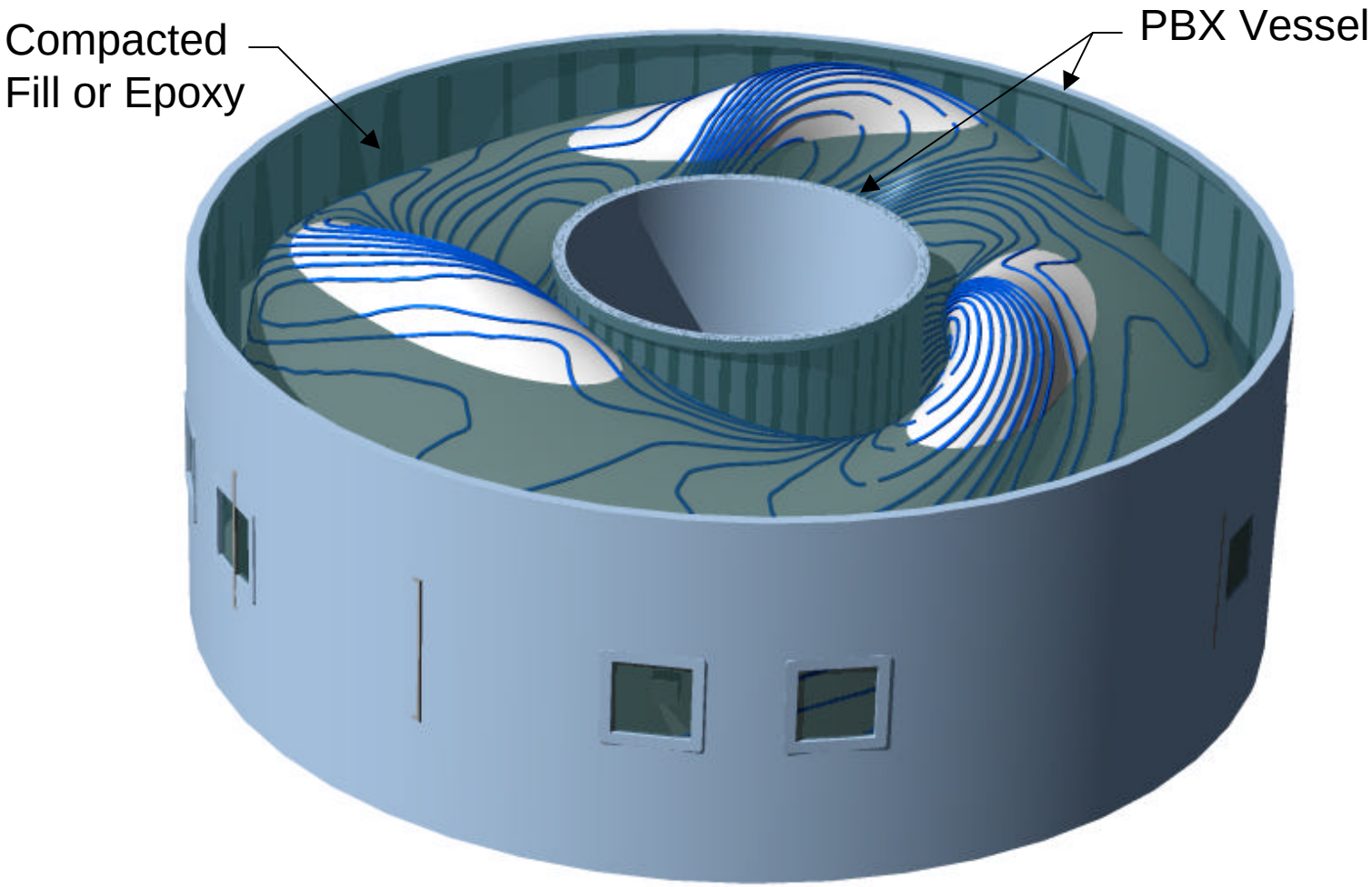

R&D for WBS 1

- R&D is needed to resolve feasibility issues and optimize fabrication processes for

- Saddle coil windings and structure

- Behavior of braided conductor in rigid slot during thermal and magnetic cycling,
- Insulating, winding and potting of conductor
  - Machining of grooves in shell structure, automation of CAD/CAM process
  - Assembly of shell structure around vacuum vessel

- Vacuum vessel

  - Checkout of software to create flat development patterns for vessel
  - Break-forming and welding of vessel sections within geometric tolerance and magnetic permeability requirements

R&D for WBS 1

- Early R&D has greatest pay-off for design improvements and cost savings
- Plan is based on three phases of work for each subsystem
  - Simple, in-house tests for specific issues (e.g. simple conductor stiffness test)
  - Integrated prototype fabrication and tests by vendor (full scale winding)
  - Follow-on production of final set of components by same vendor, if possible

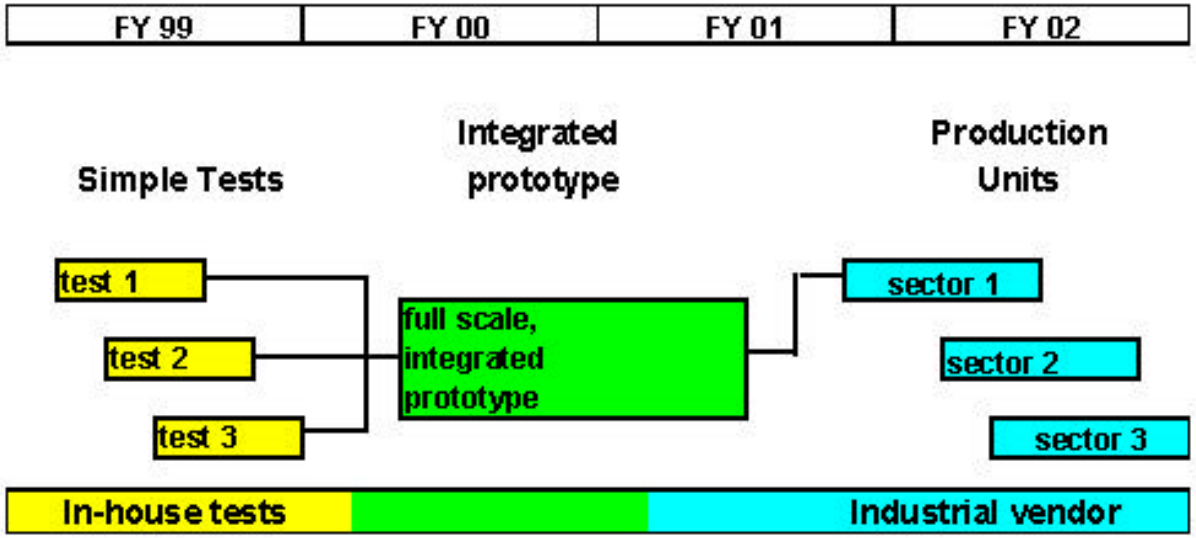

R&D Plan for Saddle Coil Windings

- In-house, simple tests make use of existing High Temperature SC test facility

1. Behavior of braided conductor in rigid slot during thermal and magnetic cycling

   What is effective stiffness of conductor?
   How long does it take to cool down between shots?
   How well does insulation system hold up to thermal cycles?

2. Insulating, winding and potting of conductor in simple coil shape

   How difficult is it to wind conductor into narrow slot?
   Can epoxy be excluded from cable during potting?
   Are crossovers and joggles a problem?

- Integrated test will integrate prototype coil winding with prototype shell segment

R&D Plan for Saddle Coil Windings, Phase 1 Cable Test

Goal

Establish stress-strain behavior of cable in rigid slot

Method

Build test fixture to accommodate cable for compression tests

Cost

Preliminary estimate is $25k

Schedule

10 weeks from start

Cable Test Fixture

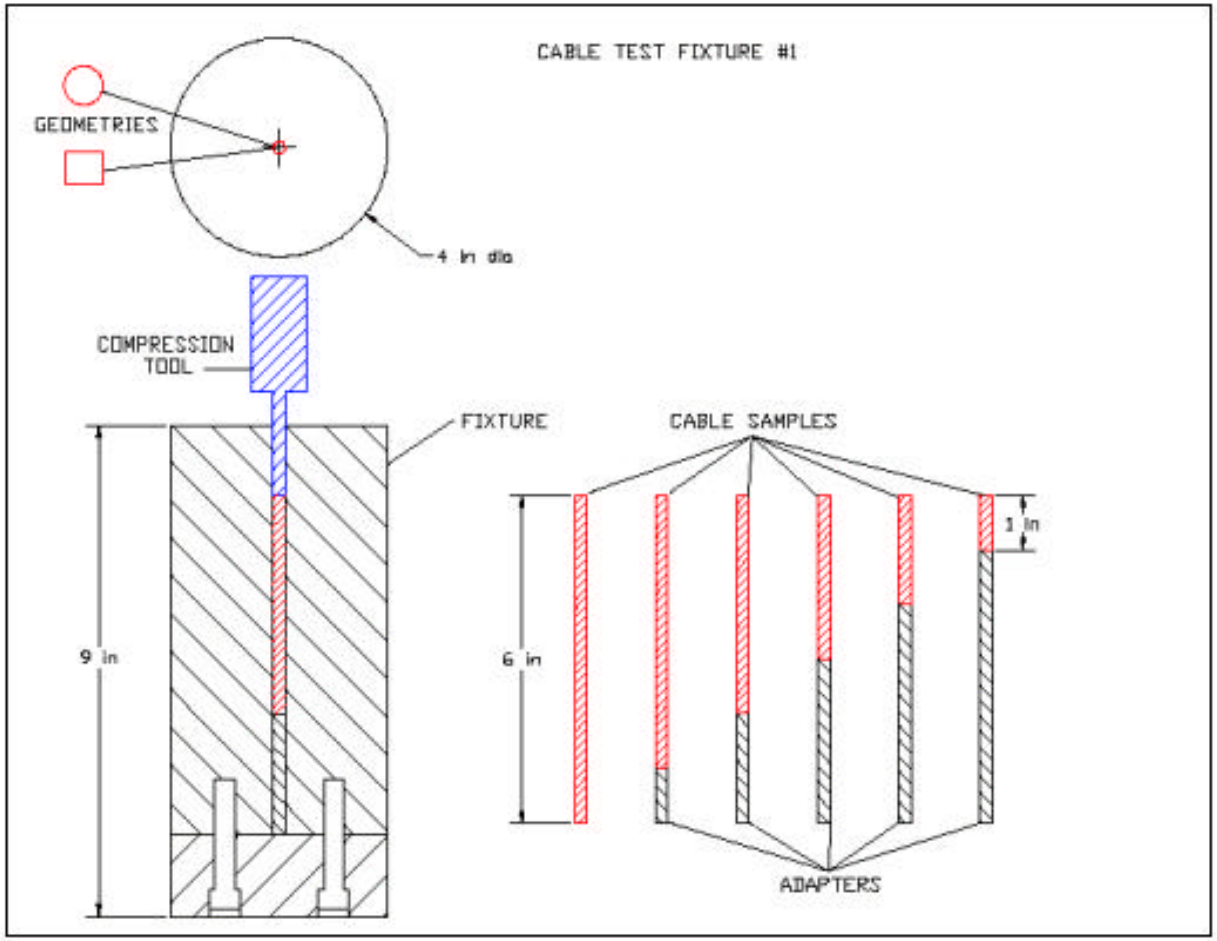

R&D Plan for Saddle Coil Windings, Phase 1 Coil Test

Goal

Investigate winding of cable in narrow slot,
Determine behavior of coil winding during thermal cycles
Determine cooldown of cable between cycles

Method

Build small racetrack coil
Use existing facility to operate coil at temperature and current

Cost

Preliminary estimate is ~$50k

Schedule

13 weeks after receipt of cable and other material

Phase 1 Coil Test

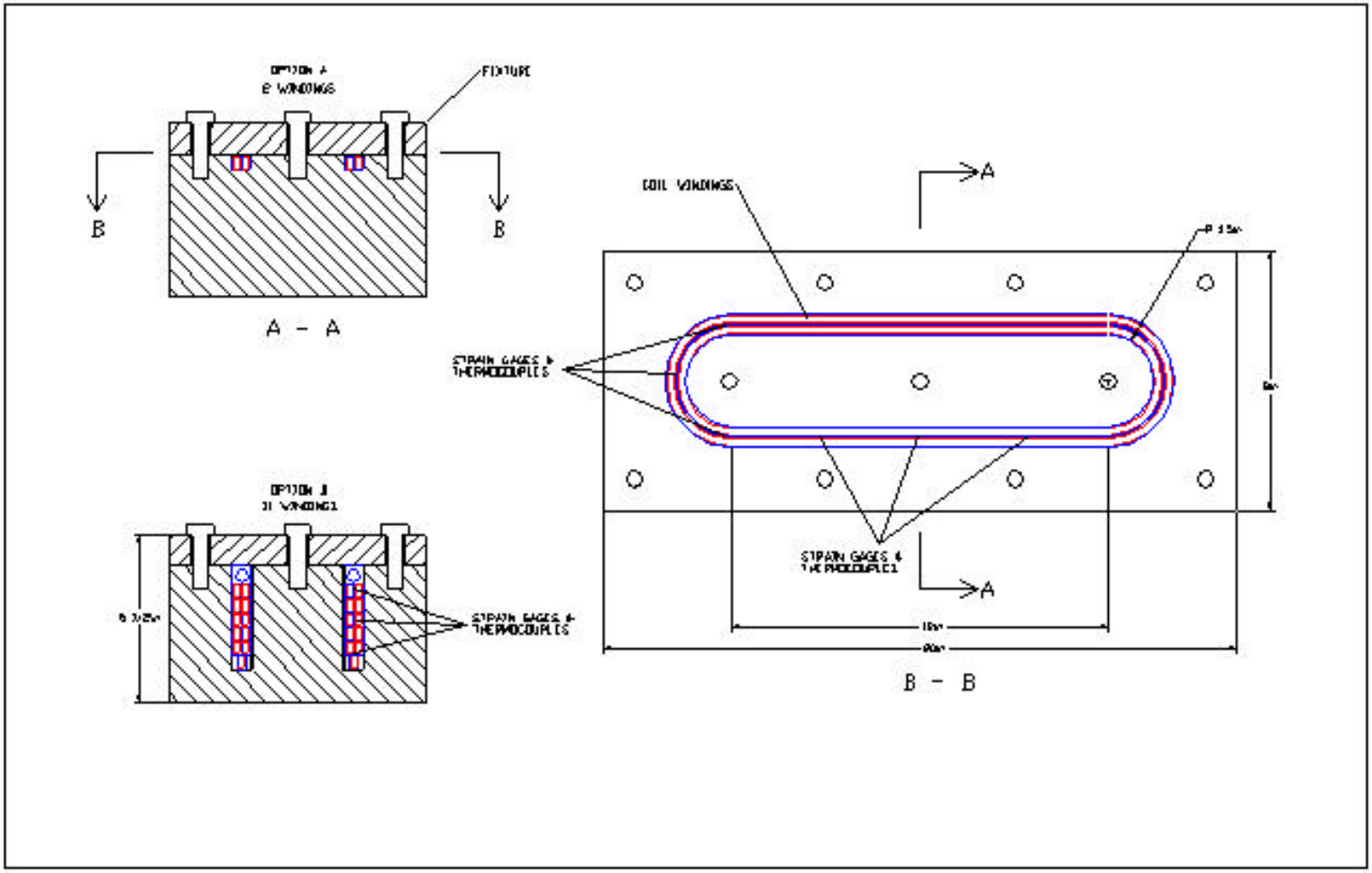

R&D Plan for Saddle Coil Structure

- Specific R&D will depend on shell concept
- Generic R&D includes
  - Fabricate subscale parts using rapid prototyping (eg stereolithography)
  - Demonstrate method to transmit winding groove geometry from Pro-E CAD model to CNC machining system by fabrication of sub-scale part
  - Demonstration of groove geometry measurement
- Full scale prototype will be machined for use in prototype winding integration test

R&D Plan for Vacuum Vessel

- Primary issue is accurate fabrication of vessel using break-forming technique
- Simple tests in-house (or with vendor) include:

  Develop software to create flat patterns
  Break bend sub-scale parts to verify software that creates flat patterns

- Full scale tests with vendor include:

  Break bend 2 full scale parts
  Weld 2 parts together

- Prototype tests with vendor may include, if needed:

  Break bend parts for partial full scale sector (1/6 of total)
  Weld parts together
  Verify measurement technique

Conclusions / Plans

- Work is progressing toward design concept selection by 4/30/1999

  Vacuum Vessel

  - Key issue is material selection / magnetic permeability

  Helical Coils / Structure

  - Key issue is still configuration (cover plate, leads, bolting)
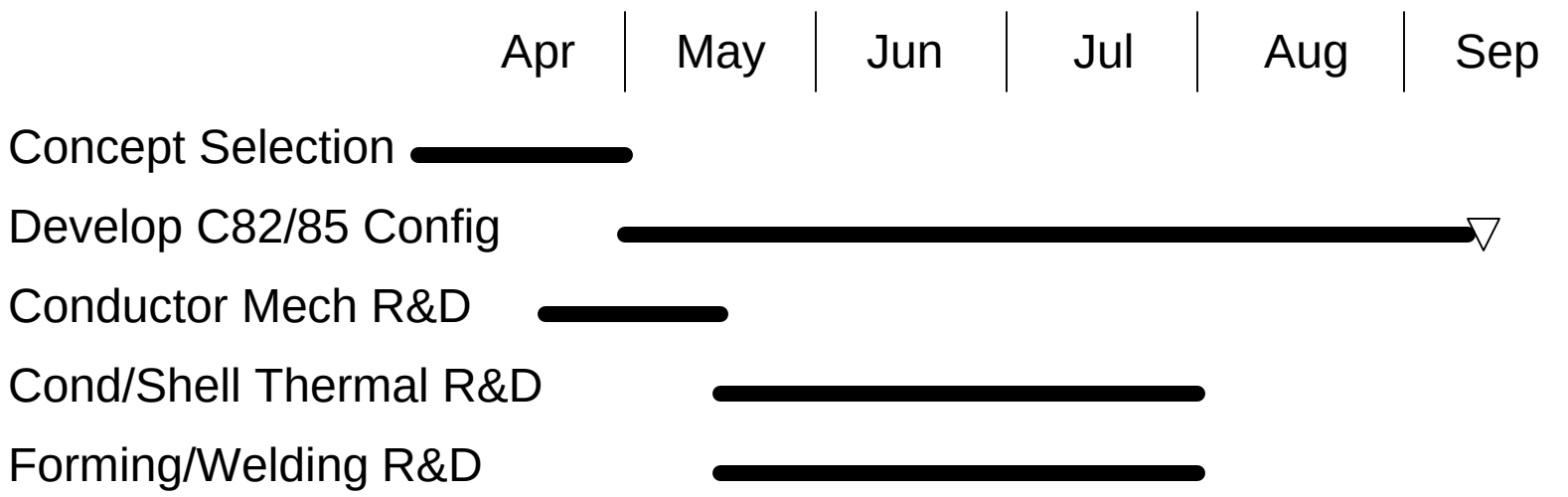
Plan