NCSX SYSTEM CONFIGURATION DRAWINGS

MAY 6, 1999

990506-mjc

NO.	REVISION	BY	CH	SUP	APPROVED	DATE

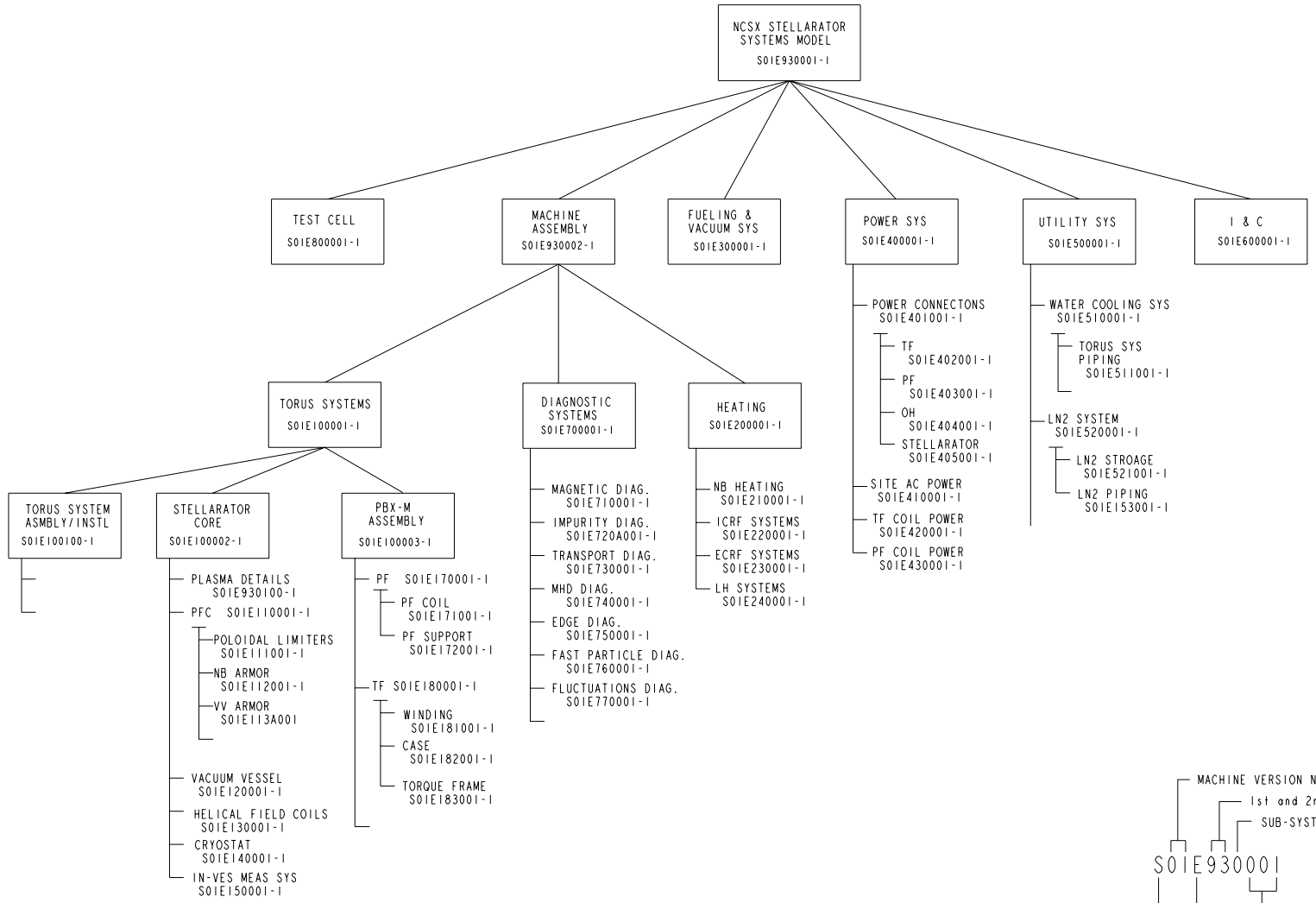

4/28/99

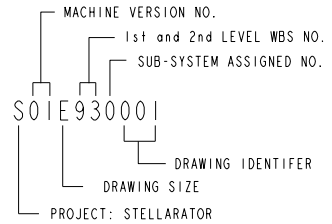

STELLARATOR
Systems Model
Drawing Tree

NO.	DATE	DESCRIPTION	BY

PRELIMINARY ISSUES
NOT APPROVED FOR CONSTRUCTION EXCEPT AS NOTED
WELDING ENGINEER
APPVD: DATE

COMPUTER GENERATED DRAWING MANUAL CHANGES NOT PERMITTED
Pro E
DO NOT VERIFY INFORMATION BY SCALING DRAWING
NEXT ASSEMBLY

CENTRAL FILES:
UNLESS OTHERWISE SPECIFIED
DIMENSIONS ARE IN INCHES
MACHINE SURFACES
BREAK SHARP EDGES .005/.020
TOLERANCES NON-CUMULATIVE

DECIMAL-INCH	FRACTIONS
.X ±.100	X'-12" ±1/16
.XX ±.030	12"-72" ±1/8
.XXX ±.005	72"-120" ±1/4
ANGULAR ±0°-15'	OVER 120" ±1/2

PRINCETON PLASMA PHYSICS LABORATORY
PRINCETON UNIVERSITY
-------- PROJECT
DRAWING TREE

DIV: MECH. ENG.
ENG:
DWN:
CHK:
DATE:
APPROVED
CHK SUPV
CADD FILE:
NCSX_DWG_TREE
SHEET 1 OF 1
REV 0

NO.	REVISION	BY	CH	SUP	APPROVED	DATE

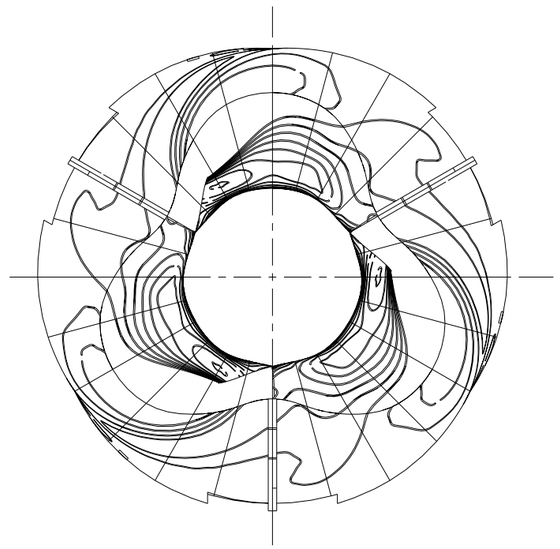

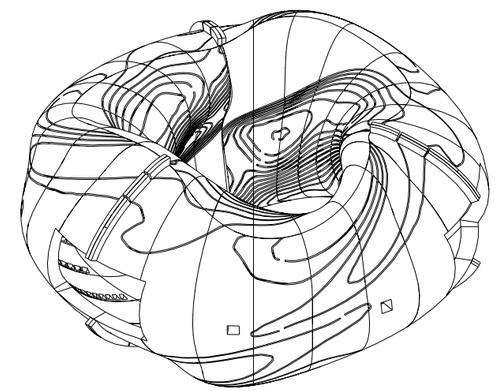

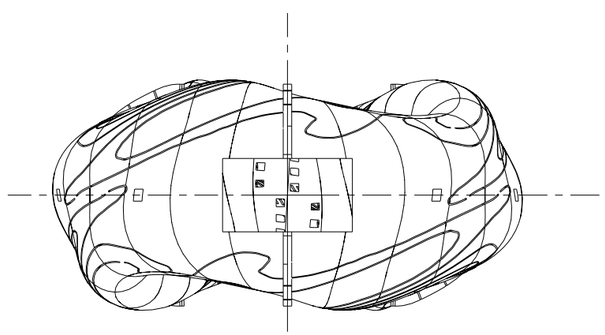

	1		S01E13200	OUTER SHELL			3
	1		S01E13100	INBOARD SHELL			2
	1		S01E13000	--			1
next assy	CAGE CODE		PART OR IDENTIFYING NO	NOMENCLATURE OR DESCRIPTION	MATERIAL	SPECIFICATION	FIND NO
	-1		NEXT ASSEMBLY	PARTS LIST			

PRINTED ON : APRIL 30, 1999

NO.	DATE	DESCRIPTION	BY

PRELIMINARY ISSUES
NOT APPROVED FOR CONSTRUCTION
EXCEPT AS NOTED
WELDING ENGINEER
APPVD:_____ DATE

COMPUTER GENERATED DRAWING
MANUAL CHANGES NOT PERMITTED

Pro E

DO NOT VERIFY INFORMATION BY SCALING DRAWING

NEXT ASSEMBLY

CENTRAL FILES:

UNLESS OTHERWISE SPECIFIED
DIMENSIONS ARE IN INCHES
MACHINE SURFACES 125
BREAK SHARP EDGES .005/.020

TOLERANCES NON-CUMULATIVE

DECIMAL-INCH		FRACTIONS	
.X	±.100	0°-12°	±1/16
.XX	±.030	12°-72°	±1/8
.XXX	±.005	72°-120°	±1/4
ANGULAR	±0°-15'	OVER 120°	±1/2

PRINCETON PLASMA PHYSICS LABORATORY
PRINCETON UNIVERSITY
NCSX PROJECT

NCSX
SHELL ASSEMBLY

DIV: MECH. ENG.
ENG:
DWN:
CHK:

DATE:
APPROVED
CHK SUPV

CADD FILE:
S01E13000

SHEET 1 OF 1
REV 0

NO.	REVISION	BY	CH	SUP	APPROVED	DATE

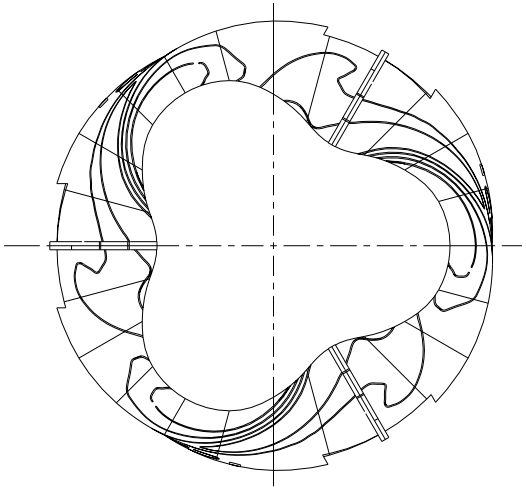

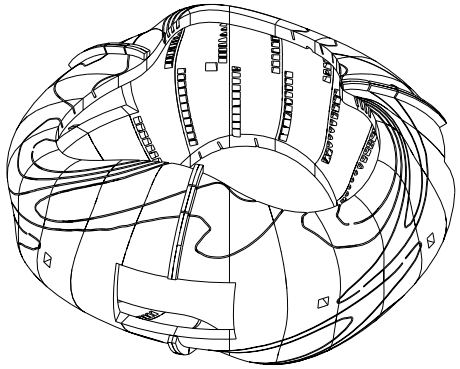

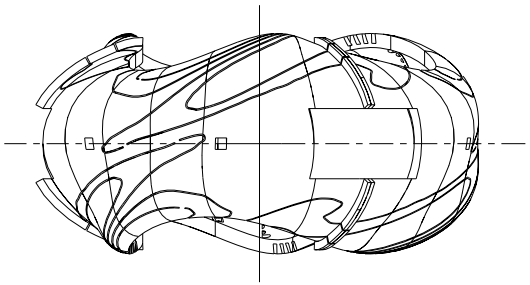

next assy		CAGE CODE	PART OR IDENTIFYING NO	NOMENCLATURE OR DESCRIPTION	MATERIAL	SPECIFICATION	FIND NO
	3		S01E13210	OUTER SHELL			2
	1		S01E13200	OUTER SHELL			1
		NEXT ASSEMBLY		PARTS LIST			

PRINTED ON : APRIL 30, 1999

NO.	DATE	DESCRIPTION	BY

PRELIMINARY ISSUES
NOT APPROVED FOR CONSTRUCTION
EXCEPT AS NOTED
WELDING ENGINEER
APPVD: _____ DATE

COMPUTER GENERATED DRAWING
MANUAL CHANGES NOT PERMITTED

Pro E

DO NOT VERIFY INFORMATION BY SCALING DRAWING

NEXT ASSEMBLY

CENTRAL FILES:
UNLESS OTHERWISE SPECIFIED
DIMENSIONS ARE IN INCHES
MACHINE SURFACES
BREAK SHARP EDGES .005/.020

TOLERANCES NON-CUMULATIVE

DECIMAL-INCH	FRACTIONS
.X ±.100	0°-30' ±1/16
.XX ±.030	30°-72' ±1/8
.XXX ±.005	72°-120' ±1/4
ANGULAR ±0°-15'	OVER 120' ±1/2

PRINCETON PLASMA PHYSICS LABORATORY
PRINCETON UNIVERSITY
NCSX PROJECT

NCSX
OUTER SHELL

DIV: MECH. ENG.
ENG:
DWN:
CHK:
DATE:
APPROVED
CHK | SUPV
CADD FILE: S01E13200
SHEET 1 OF 1
REV 0

NO.	REVISION	BY	CH	SUP	APPROVED	DATE

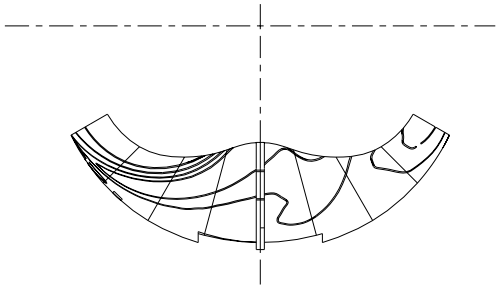

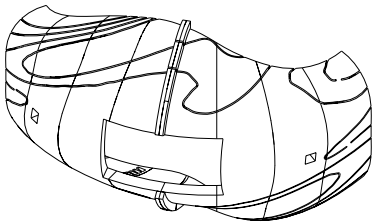

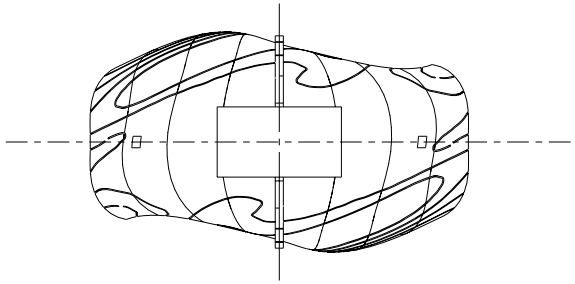

next assy		CAGE CODE	PART OR IDENTIFYING NO	NOMENCLATURE OR DESCRIPTION	MATERIAL	SPECIFICATION	FIND NO
	2		S01E13220	outer shell quad			2
	1		S01E13210	OUTER SHELL			1
	-		NEXT ASSEMBLY	PARTS LIST			

PRINTED ON : APRIL 30, 1999

NO.	DATE	DESCRIPTION	BY

PRELIMINARY ISSUES
NOT APPROVED FOR CONSTRUCTION
EXCEPT AS NOTED
WELDING ENGINEER
APPVD:_____ DATE

COMPUTER GENERATED DRAWING
MANUAL CHANGES NOT PERMITTED

Pro E

DO NOT VERIFY INFORMATION BY SCALING DRAWING

NEXT ASSEMBLY

CENTRAL FILES:
UNLESS OTHERWISE SPECIFIED
DIMENSIONS ARE IN INCHES
MACHINE SURFACES
BREAK SHARP EDGES .005/.020

TOLERANCES NON-CUMULATIVE

DECIMAL-INCH		FRACTIONS	
.X	±.100	0"-12"	±1/16
.XX	±.030	12"-72"	±1/8
.XXX	±.005	72"-120"	±1/4
ANGULAR	±0°-15'	OVER 120"	±1/2

PRINCETON PLASMA PHYSICS LABORATORY
PRINCETON UNIVERSITY
NCSX PROJECT

NCSX
OUTER SHELL PERIOD

DIV: MECH. ENG.
ENG:
DWN:
CHK:
DATE:
APPROVED
CHK | SUPV
CADD FILE:
S01E13210
SHEET 1 OF 1
REV 0

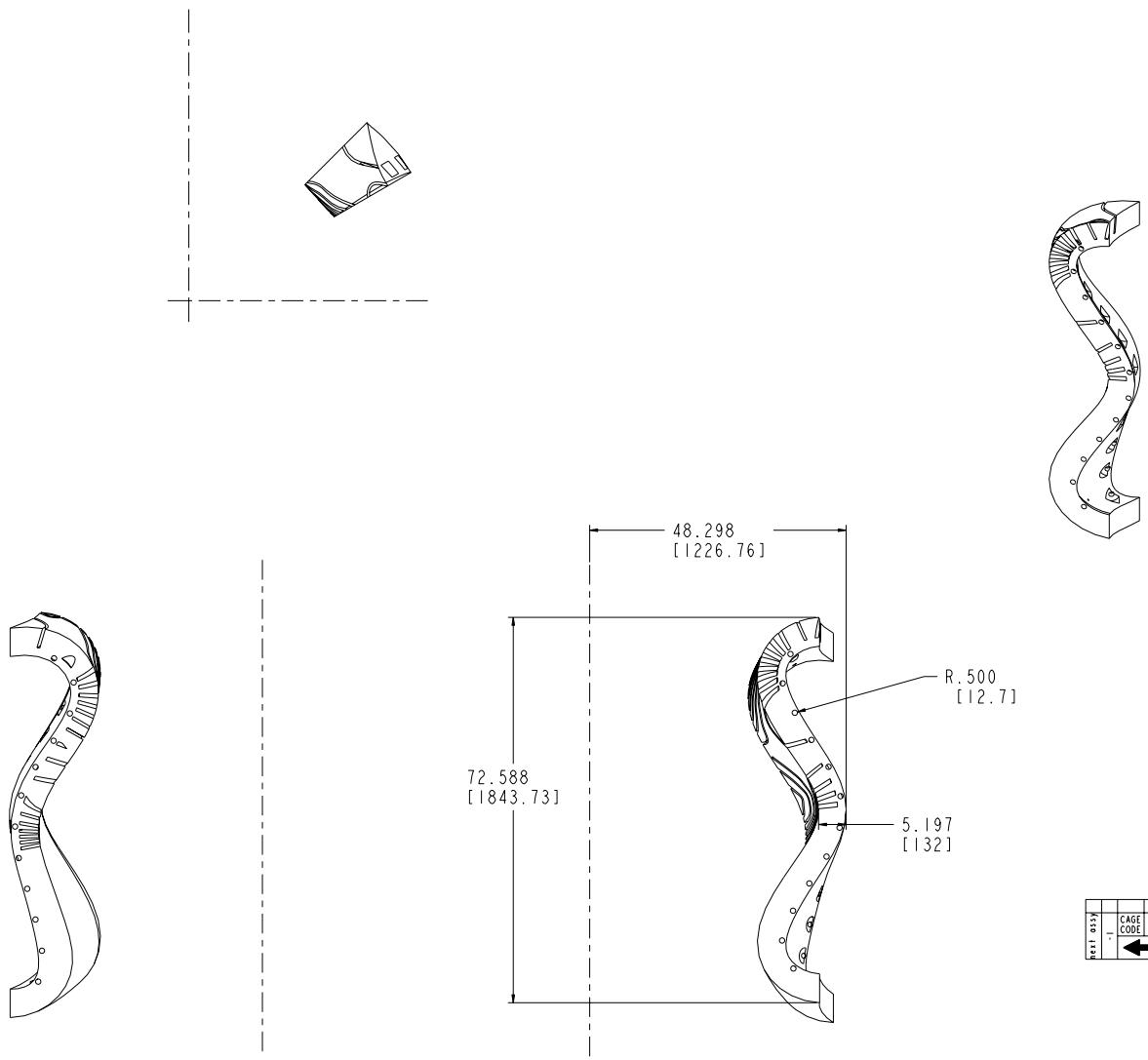

NO.	REVISION	BY	CH	SUP	APPROVED	DATE

next assy		CAGE CODE	PART OR IDENTIFYING NO	NOMENCLATURE OR DESCRIPTION	MATERIAL	SPECIFICATION	FIND NO
	-1		NEXT ASSEMBLY	PARTS LIST			

PRINTED ON: APRIL 30, 1999

NO.	DATE	DESCRIPTION	BY

PRELIMINARY ISSUES
NOT APPROVED FOR CONSTRUCTION EXCEPT AS NOTED
WELDING ENGINEER
APPVD:_____ DATE

COMPUTER GENERATED DRAWING
MANUAL CHANGES NOT PERMITTED
Pro E
DO NOT VERIFY INFORMATION BY SCALING DRAWING
NEXT ASSEMBLY

CENTRAL FILES:
UNLESS OTHERWISE SPECIFIED
DIMENSIONS ARE IN INCHES
MACHINE SURFACES
BREAK SHARP EDGES .005/.020
TOLERANCES NON-CUMULATIVE

DECIMAL-INCH		FRACTIONS	
.X	1.100	0°-12°	1/16
.XX	1.030	12°-72°	1/8
.XXX	1.005	72°-120°	1/4
ANGULAR	0°-15°	OVER 120°	1/2

PRINCETON PLASMA PHYSICS LABORATORY
PRINCETON UNIVERSITY
NCSX PROJECT
NCSX
INNER SHELL WEDGE

DIV: MECH. ENG.
ENG:
DWN:
CHK:
DATE:
APPROVED
CHK
SUPV
EMI
CADD FILE:
S01E13121
SHEET 1 OF 1
REV 0

NO.	REVISION	BY	CH	SUP	APPROVED	DATE

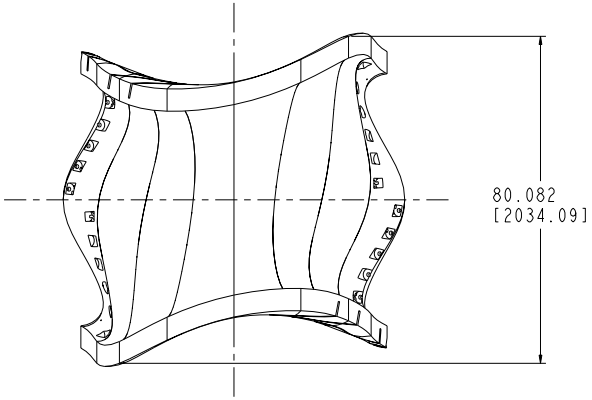

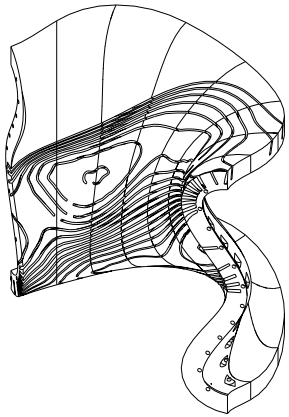

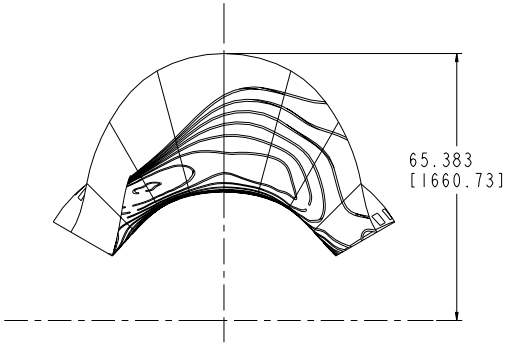

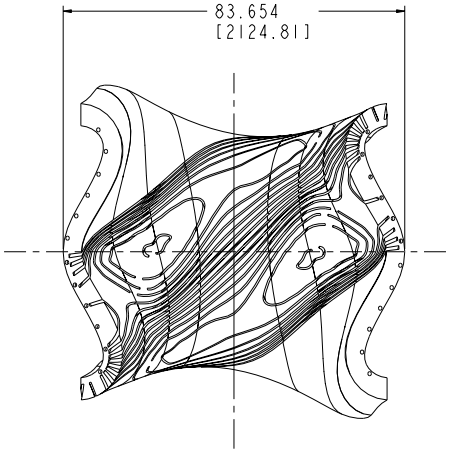

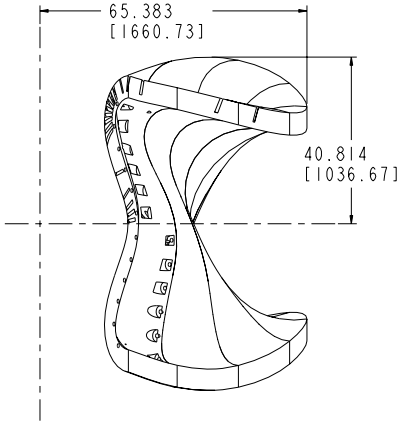

next assy	QTY	CAGE CODE	PART OR IDENTIFYING NO	NOMENCLATURE OR DESCRIPTION	MATERIAL	SPECIFICATION	FIND NO
	2		S01E13120	Inner Shell			2
	1		S01E13110	INBOARD SHELL			1
			NEXT ASSEMBLY	PARTS LIST			

PRINTED ON: APRIL 30, 1999

NO.	DATE	DESCRIPTION	BY

PRELIMINARY ISSUES
NOT APPROVED FOR CONSTRUCTION EXCEPT AS NOTED
WELDING ENGINEER
APPVD:_____ DATE

COMPUTER GENERATED DRAWING
MANUAL CHANGES NOT PERMITTED

Pro E

DO NOT VERIFY INFORMATION BY SCALING DRAWING

NEXT ASSEMBLY

CENTRAL FILES:
UNLESS OTHERWISE SPECIFIED
DIMENSIONS ARE IN INCHES
MACHINE SURFACES 125
BREAK SHARP EDGES .005/.020

TOLERANCES NON-CUMULATIVE

DECIMAL-INCH		FRACTIONS	
.X	±.100	0°-30'	±1/16
.XX	±.030	30'-72'	±1/8
.XXX	±.005	72'-120'	±1/4
ANGULAR	±0°-15'	OVER 120'	±1/2

PRINCETON PLASMA PHYSICS LABORATORY
PRINCETON UNIVERSITY
NCSX PROJECT

NCSX
120 DEG SEG INNER SHELL

DIV: MECH. ENG.
ENG:
DWN:
CHK:
DATE:
APPROVED
CHK | SUPV
CADD FILE: S01E13110
SHEET 1 OF 1
REV 0

NO.	REVISION	BY	CH	SUP	APPROVED	DATE

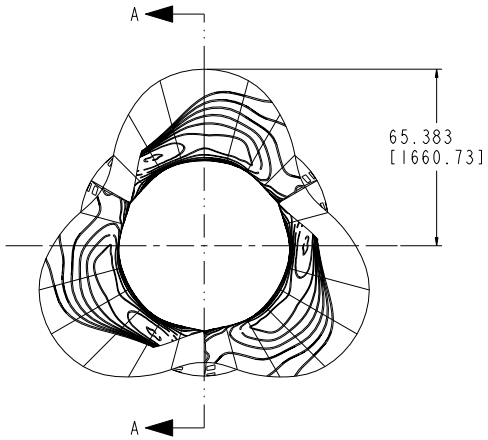

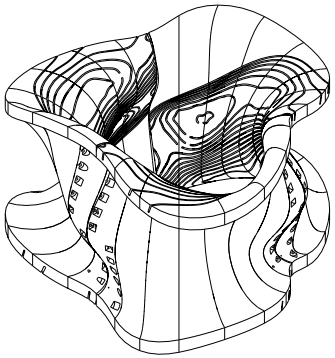

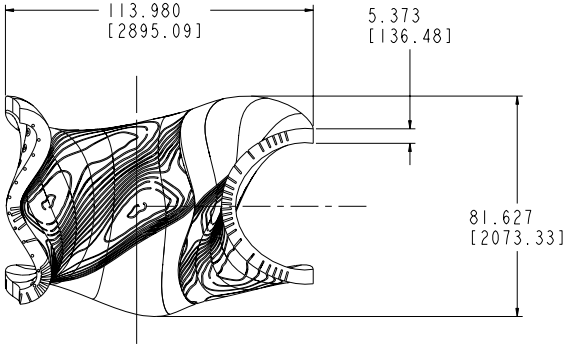

SECTION A-A

next assy		CAGE CODE	PART OR IDENTIFYING NO	NOMENCLATURE OR DESCRIPTION	MATERIAL	SPECIFICATION	FIND NO
	3		S01E13110	INBOARD SHELL			2
	1		S01E13100	INBOARD SHELL			1
		NEXT ASSEMBLY		PARTS LIST			

PRINTED ON: APRIL 30, 1999

NO.	DATE	DESCRIPTION	BY

PRELIMINARY ISSUES
NOT APPROVED FOR CONSTRUCTION
EXCEPT AS NOTED
WELDING ENGINEER
APPVD:_____ DATE

COMPUTER GENERATED DRAWING
MANUAL CHANGES NOT PERMITTED

Pro E

DO NOT VERIFY INFORMATION BY SCALING DRAWING

NEXT ASSEMBLY

CENTRAL FILES:
UNLESS OTHERWISE SPECIFIED
DIMENSIONS ARE IN INCHES
MACHINE SURFACES
BREAK SHARP EDGES .005/.020

TOLERANCES NON-CUMULATIVE

DECIMAL-INCH	FRACTIONS
.X ±.100	0°-30' ±1/16
.XX ±.030	30'-72' ±1/8
.XXX ±.005	72'-120' ±1/4
ANGULAR ±0°-15'	OVER 120' ±1/2

PRINCETON PLASMA PHYSICS LABORATORY
PRINCETON UNIVERSITY
NCSX PROJECT

NCSX
INNER SHELL

DIV: MECH. ENG.
ENG:
DWN:
CHK:
DATE:
APPROVED
CHK | SUPV
CADD FILE:
S01E13100
SHEET 1 OF 1
REV 0

NO.	REVISION	BY	CH	SUP	APPROVED	DATE

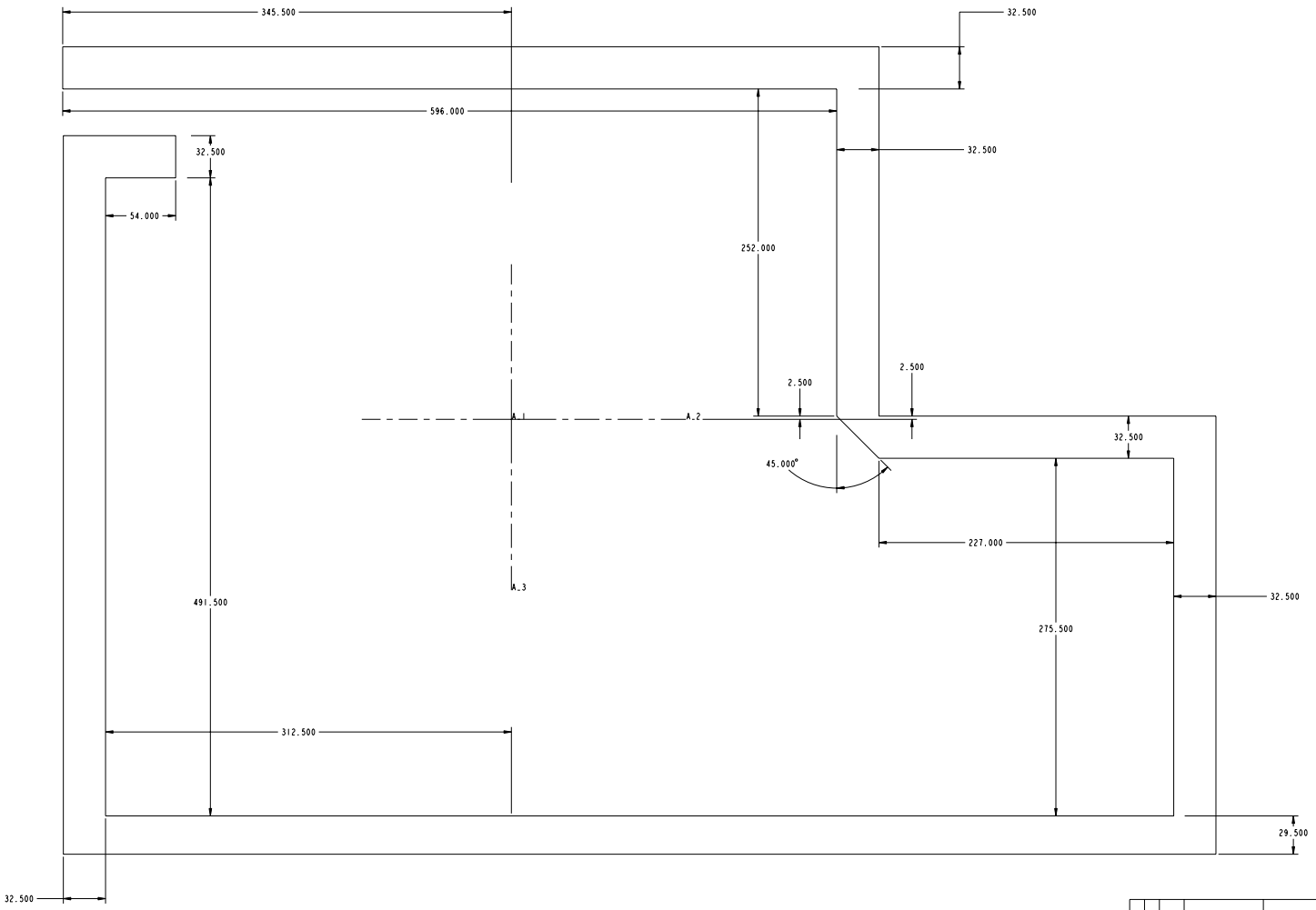

next assy		CAGE CODE	PART OR IDENTIFYING NO	NOMENCLATURE OR DESCRIPTION	MATERIAL	SPECIFICATION	FIND NO
	- 1 -		NEXT ASSEMBLY	PARTS LIST			

NO.	DATE	DESCRIPTION	BY

PRELIMINARY ISSUES
NOT APPROVED FOR CONSTRUCTION
EXCEPT AS NOTED
WELDING ENGINEER
APPVD:_____ DATE

COMPUTER GENERATED DRAWING
MANUAL CHANGES NOT PERMITTED

Pro E

DO NOT VERIFY INFORMATION BY SCALING DRAWING

NEXT ASSEMBLY

CENTRAL FILES:

UNLESS OTHERWISE SPECIFIED
DIMENSIONS ARE IN INCHES
MACHINE SURFACES 125
BREAK SHARP EDGES .005/.020

TOLERANCES NON-CUMULATIVE

DECIMAL-INCH		FRACTIONS	
.X	±.100	0"-12"	±1/16
.XX	±.030	12"-72"	±1/8
.XXX	±.005	72"-120"	±1/4
ANGULAR	±0°-15'	OVER 120"	±1/2

PRINCETON PLASMA PHYSICS LABORATORY
PRINCETON UNIVERSITY
NCSX PROJECT
XXXXX
XXXXX

DIV: MECH. ENG.
ENG:
DWN:
CHK:

DATE:
APPROVED
CHK | SUPV

CADD FILE:
PBX-M_FACILITY
SHEET 1 OF 1
REV 0

NO.	REVISION	BY	CH	SUP	APPROVED	DATE

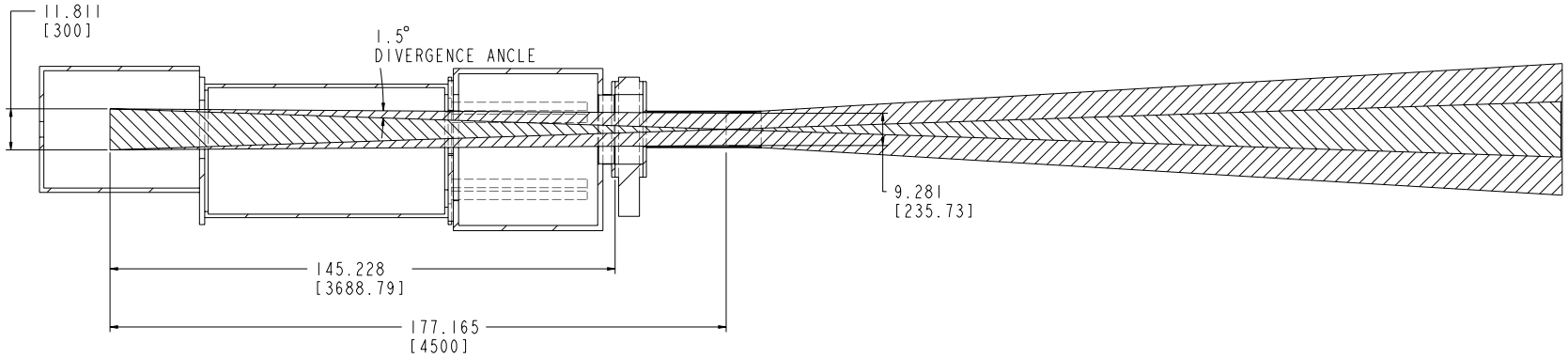

SECTION A-A

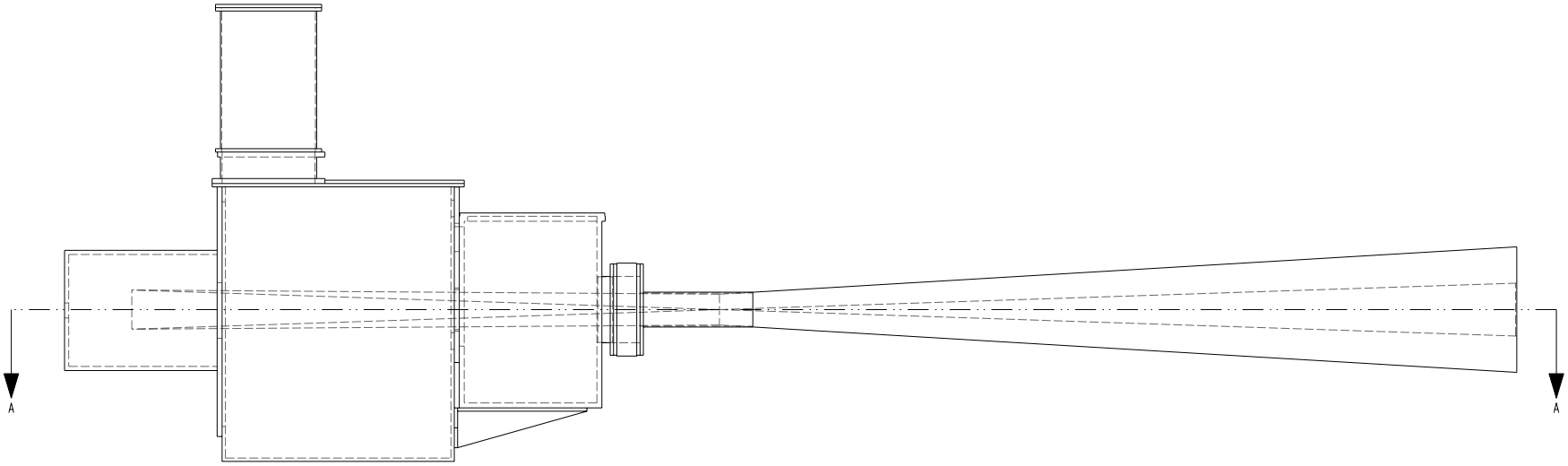

NO.	DATE	DESCRIPTION	BY

PRELIMINARY ISSUES
NOT APPROVED FOR CONSTRUCTION
EXCEPT AS NOTED
WELDING ENGINEER
APPVD:_____ DATE

COMPUTER GENERATED DRAWING
MANUAL CHANGES NOT PERMITTED

Pro E

DO NOT VERIFY INFORMATION BY SCALING DRAWING

NEXT ASSEMBLY

CENTRAL FILES:

UNLESS OTHERWISE SPECIFIED

DIMENSIONS ARE IN INCHES
MACHINE SURFACES 125

BREAK SHARP EDGES .005/.020

TOLERANCES NON-CUMULATIVE

DECIMAL-INCH		FRACTIONS	
.X	±.100	0°-10°	±1/16
.XX	±.030	10°-20°	±1/8
.XXX	±.005	20°-120°	±1/4
ANGULAR	±0°-15'	OVER 120°	±1/2

PRINCETON PLASMA PHYSICS LABORATORY
PRINCETON UNIVERSITY
NCSX PROJECT

NCSX
NEUTRAL BEAM AND BEAMBOX

DIV: MECH. ENG.
ENG:
DWN:
CHK:
DATE:
APPROVED
CHK
SUPV
CADD FILE:
NB_AND_BEAMBOX
SHEET 1 OF 1
REV 0

NO.	REVISION	BY	CH	SUP	APPROVED	DATE

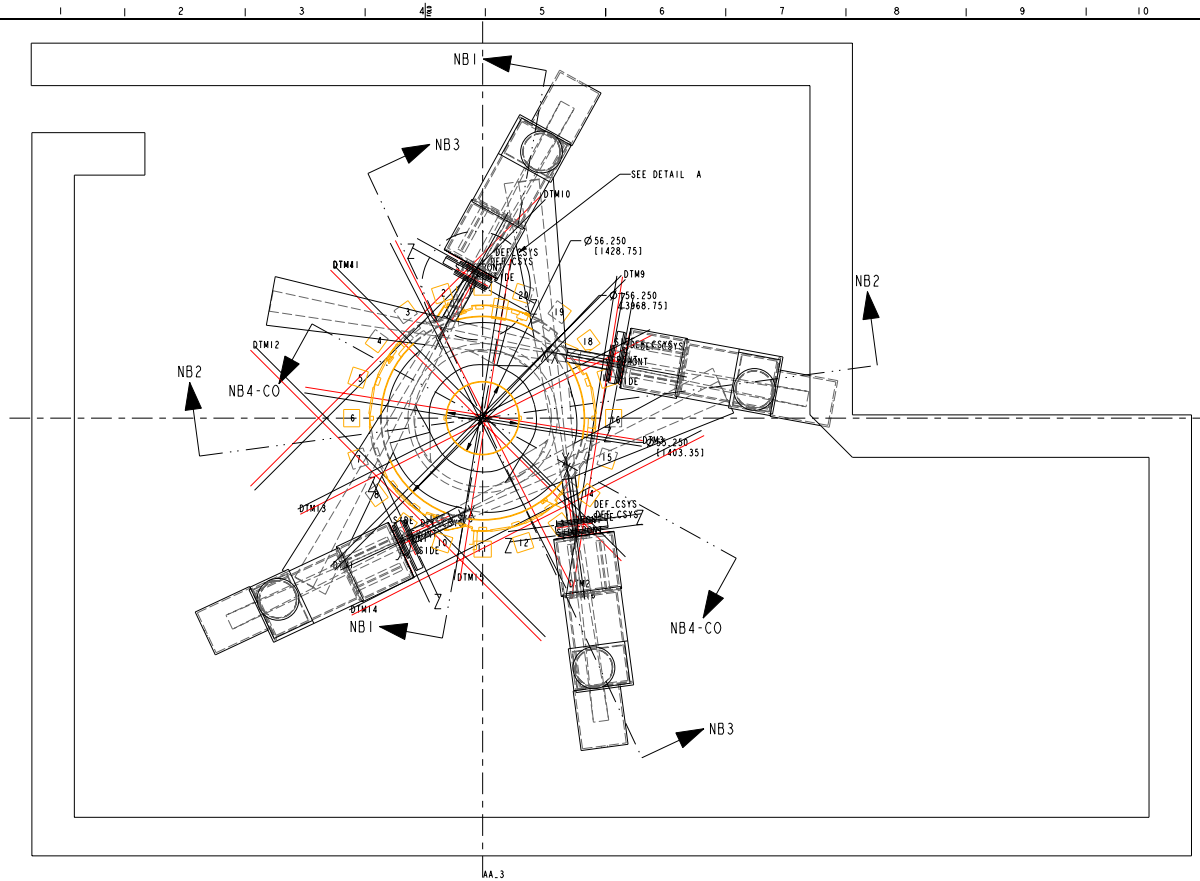

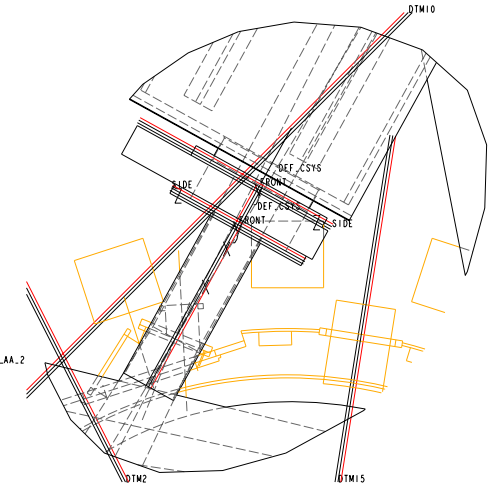

DETAIL A
SCALE 0.125

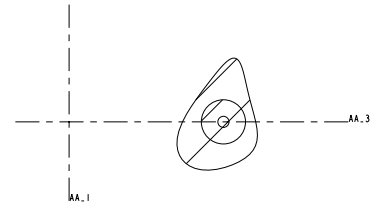

SECTION NB4-CO-NB4-CO
SCALE 0.060

Next Assy		CAGE CODE	PART OR IDENTIFYING NO	NOMENCLATURE OR DESCRIPTION	MATERIAL	SPECIFICATION	FIND NO
	1		P-3C10A	--			6
	1		NBEAM-ASSY2	--			5
	5		NBEAM-ASSY	--			4
	5		BEAMBOX1	--			3
	1		PBX-M_PLAN	--	--	--	2
	1		PBX-M_FACILITY	--	--	--	1

NEXT ASSEMBLY — PARTS LIST

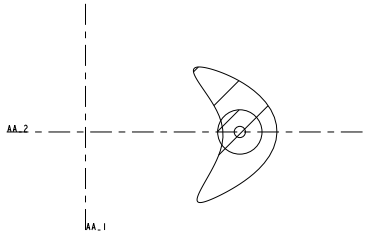

SECTION NB1-NB1
SCALE 0.060

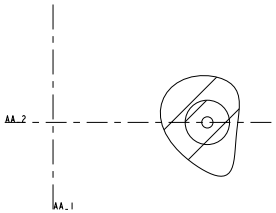

SECTION NB2-NB2
SCALE 0.060

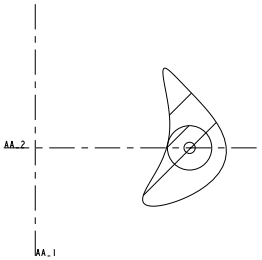

SECTION NB3-NB3
SCALE 0.060

NO.	DATE	DESCRIPTION	BY

PRELIMINARY ISSUES
NOT APPROVED FOR CONSTRUCTION EXCEPT AS NOTED
WELDING ENGINEER
APPVD: _____ DATE

COMPUTER GENERATED DRAWING
MANUAL CHANGES NOT PERMITTED

Pro E

DO NOT VERIFY INFORMATION BY SCALING DRAWING

NEXT ASSEMBLY

CENTRAL FILES:
UNLESS OTHERWISE SPECIFIED
DIMENSIONS ARE IN INCHES
MACHINE SURFACES 125
BREAK SHARP EDGES .005/.020

TOLERANCES NON-CUMULATIVE

DECIMAL-INCH		FRACTIONS	
.X	±.100	0°-30°	±1/16
.XX	±.030	30°-72°	±1/8
.XXX	±.005	72°-120°	±1/4
ANGULAR	±0°-15'	OVER 120°	±1/2

PRINCETON PLASMA PHYSICS LABORATORY
PRINCETON UNIVERSITY
NCSX PROJECT

NCSX
NB CROSS SECTIONS

DIV: MECH. ENG.
ENG:
DWN:
CHK:
DATE:
APPROVED
CHK | SUPV
CADD FILE:
NB-CROSS-SECTIONS
SHEET 1 OF 1
REV 0

NO.	REVISION	BY	CH	SUP	APPROVED	DATE

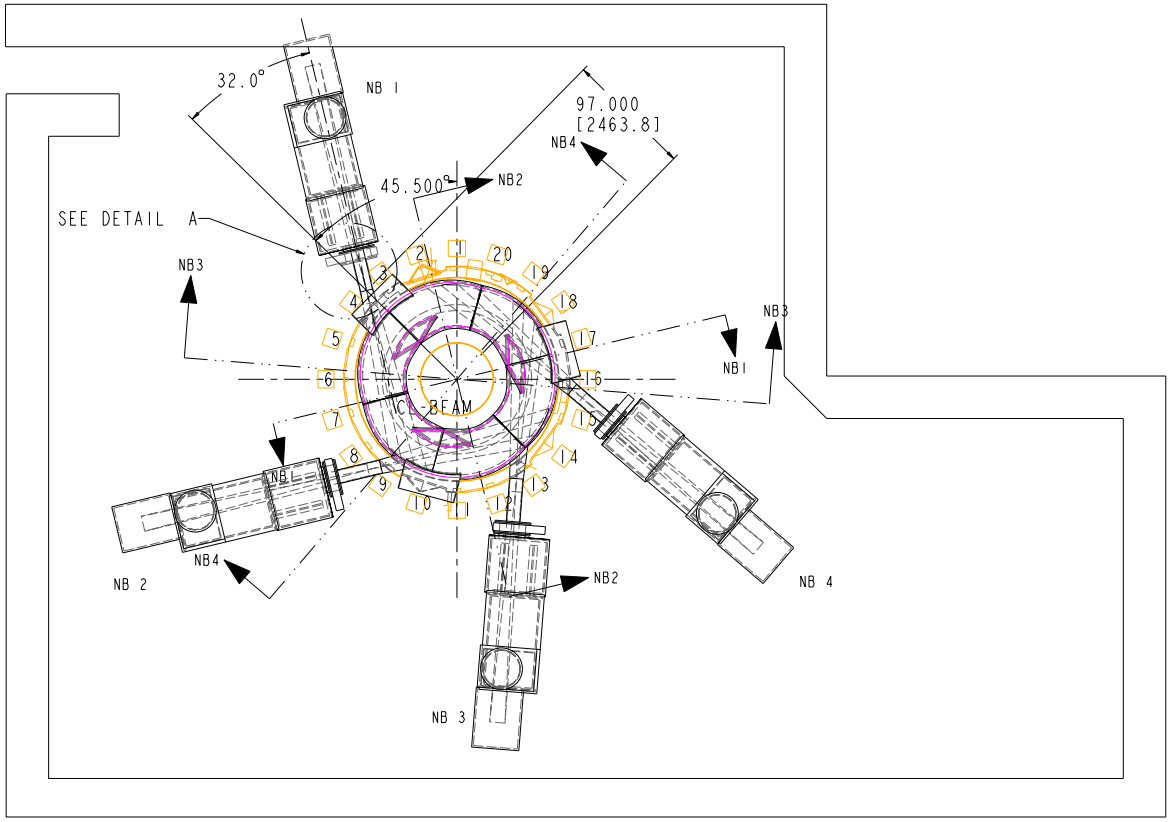

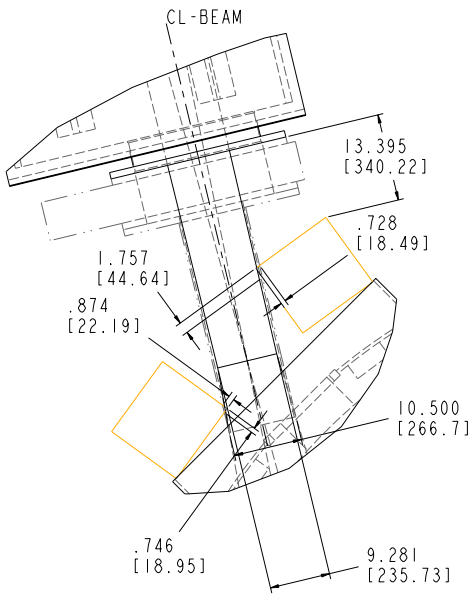

DETAIL A
SCALE 0.150

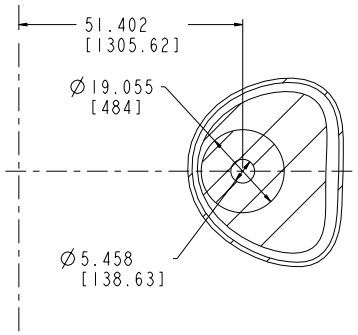

SECTION NB1-NB1
SCALE 0.100

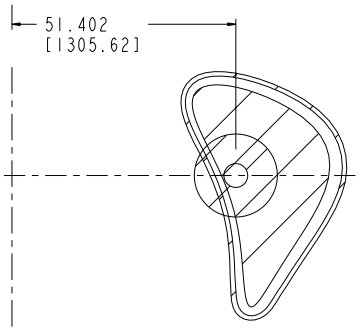

SECTION NB2-NB2
SCALE 0.100

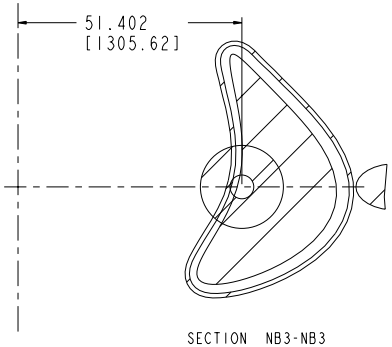

SECTION NB3-NB3
SCALE 0.100

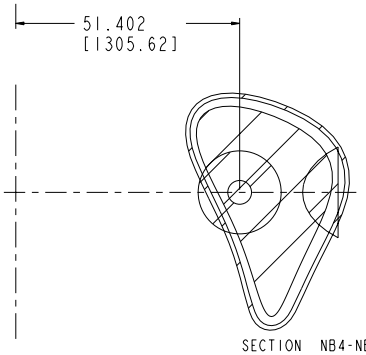

SECTION NB4-NB4
SCALE 0.100

Printed: 2/22/99

NO.	DATE	DESCRIPTION	BY

PRELIMINARY ISSUES
NOT APPROVED FOR CONSTRUCTION
EXCEPT AS NOTED
WELDING ENGINEER
APPVD:_____ DATE

COMPUTER GENERATED DRAWING
MANUAL CHANGES NOT PERMITTED

Pro E

DO NOT VERIFY INFORMATION BY SCALING DRAWING

NEXT ASSEMBLY

CENTRAL FILES:
UNLESS OTHERWISE SPECIFIED
DIMENSIONS ARE IN INCHES
MACHINE SURFACES
BREAK SHARP EDGES .005/.020

TOLERANCES NON-CUMULATIVE

DECIMAL-INCH		FRACTIONS	
.X	±.100	0°-22°	±1/16
.XX	±.030	22°-72°	±1/8
.XXX	±.005	72°-120°	±1/4
ANGULAR	±0°-15'	OVER 120°	±1/2

PRINCETON PLASMA PHYSICS LABORATORY
PRINCETON UNIVERSITY
NCSX PROJECT

NCSX
NEUTRAL BEAM POSITION

DIV: MECH. ENG.
DATE:
APPROVED
ENG:
DWN:
CHK:
CHK
SUPV
CADD FILE:
NBEAM-ASSY1-3
SHEET 1 OF 1
REV 0

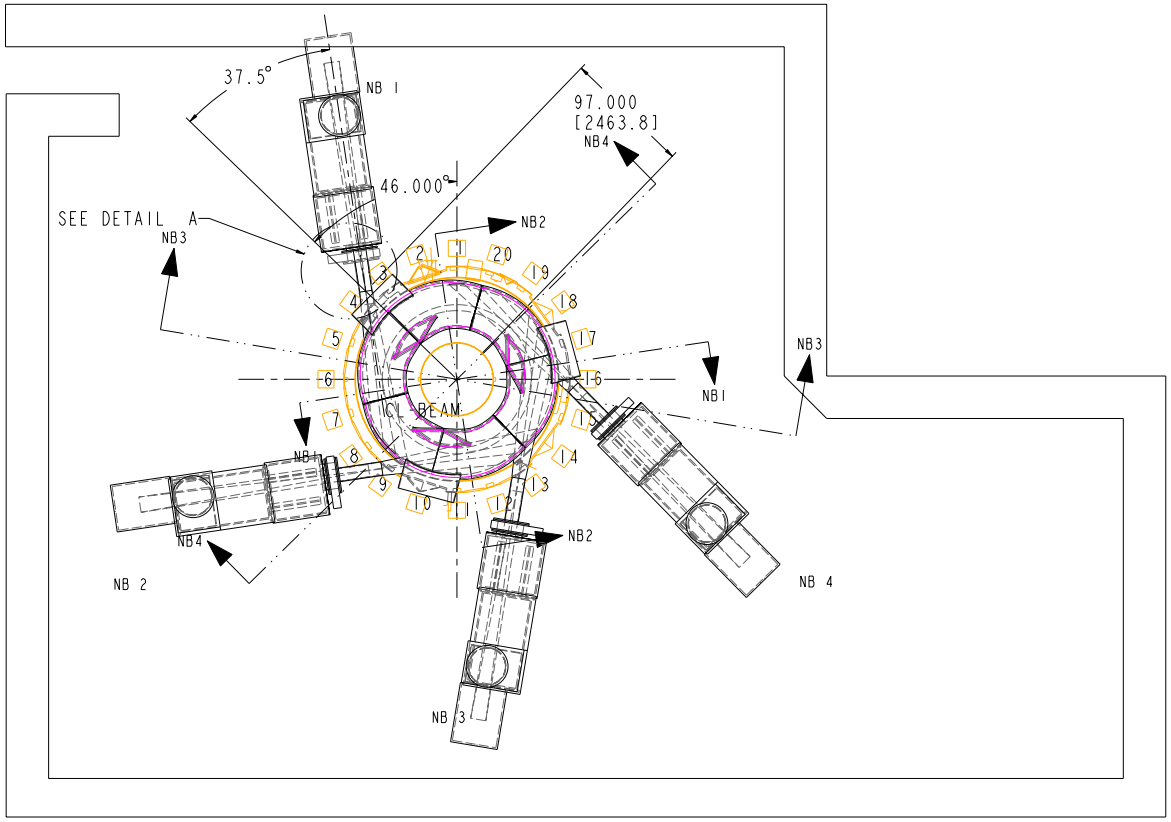

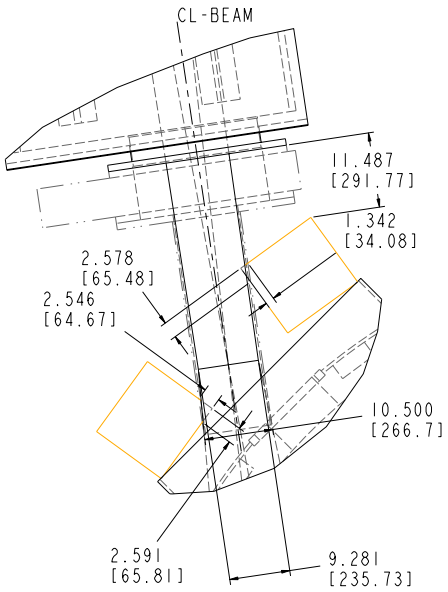

DETAIL A
SCALE 0.150

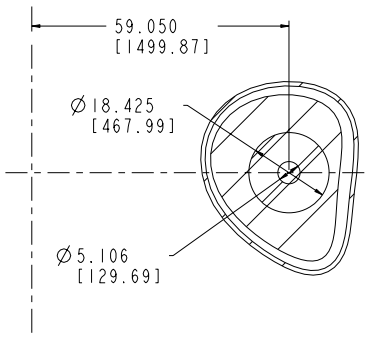

SECTION NB1-NB1
SCALE 0.100

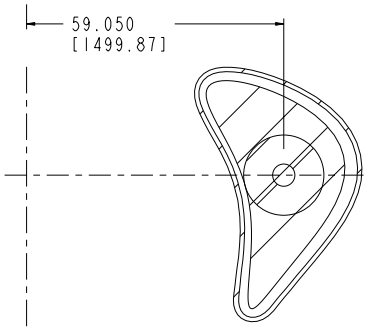

SECTION NB2-NB2
SCALE 0.100

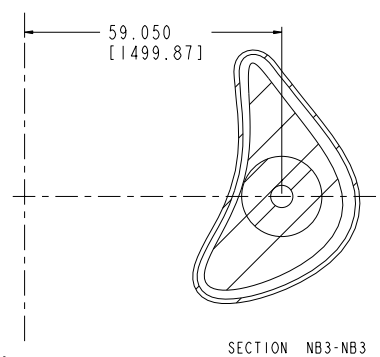

SECTION NB3-NB3
SCALE 0.100

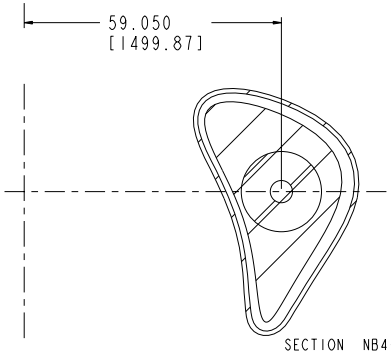

SECTION NB4-NB4
SCALE 0.100

Printed: 2/22/99

NO.	DATE	DESCRIPTION	BY

PRELIMINARY ISSUES
NOT APPROVED FOR CONSTRUCTION EXCEPT AS NOTED
WELDING ENGINEER
APPVD: DATE

COMPUTER GENERATED DRAWING
MANUAL CHANGES NOT PERMITTED
Pro E
DO NOT VERIFY INFORMATION BY SCALING DRAWING
NEXT ASSEMBLY

CENTRAL FILES:
UNLESS OTHERWISE SPECIFIED
DIMENSIONS ARE IN INCHES
MACHINE SURFACES
BREAK SHARP EDGES .005/.020
TOLERANCES NON-CUMULATIVE

DECIMAL-INCH		FRACTIONS	
.X	1.100	0°-12°	1/16
.XX	1.030	12°-72°	1/16
.XXX	1.005	72°-120°	1/4
ANGULAR	0°-15°	OVER 120°	1/2

PRINCETON PLASMA PHYSICS LABORATORY
PRINCETON UNIVERSITY
NCSX PROJECT
NCSX
NEUTRAL BEAM POSITION

DIV: MECH. ENG.
DATE:
CADD FILE:
ENG:
APPROVED
DWN:
CHK:
SUPV
NBEAM-ASSY1-5
SHEET 1 OF 1
REV 0
EMI

NO.	REVISION	BY	CH	SUP	APPROVED	DATE

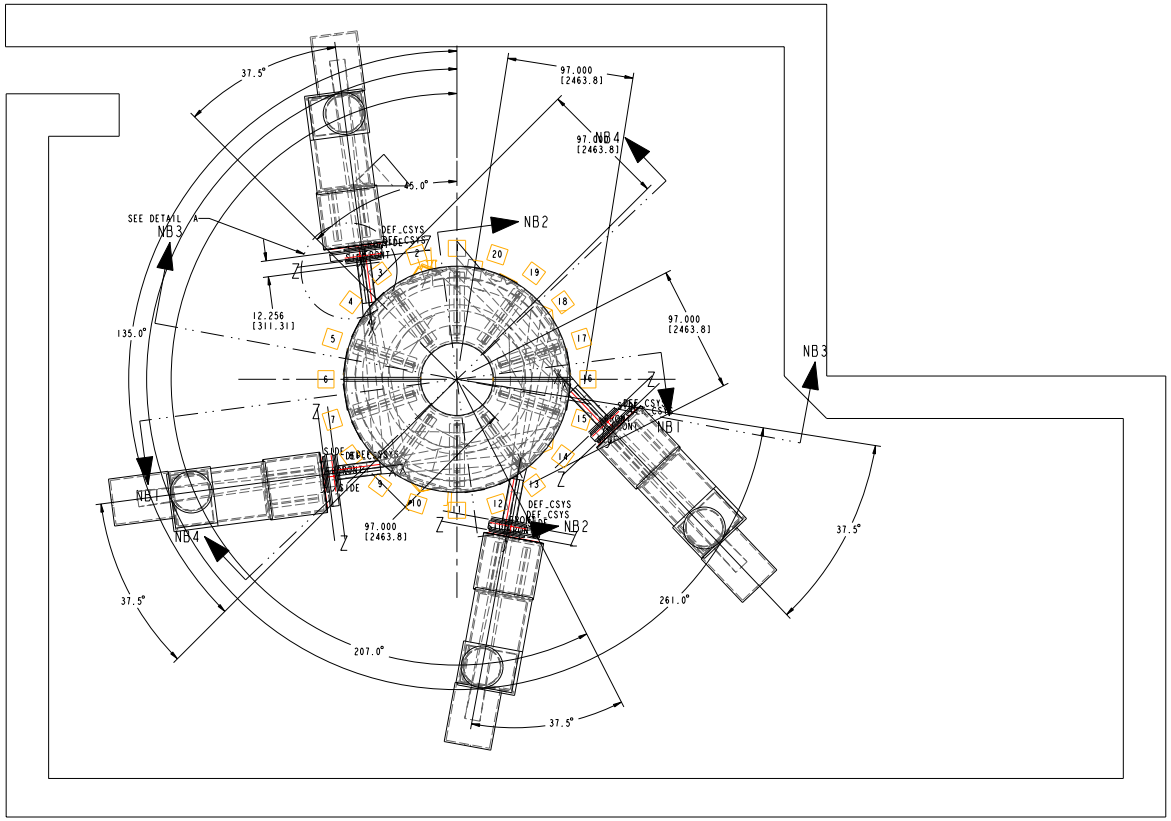

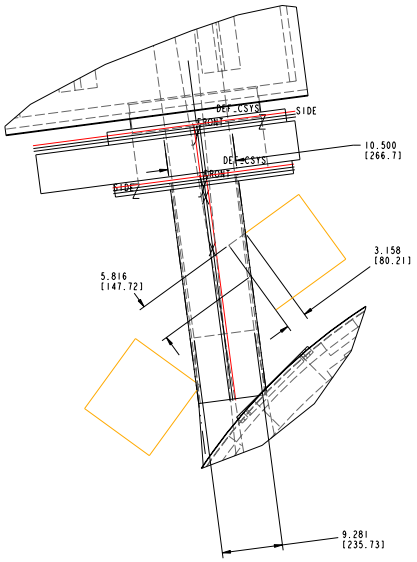

DETAIL A
SCALE 0.150

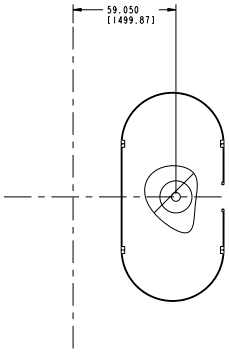

SECTION NB1-NB1
SCALE 0.040

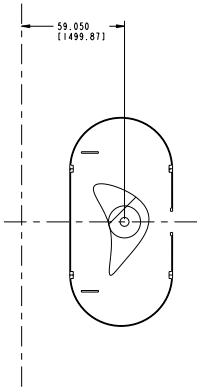

SECTION NB2-NB2
SCALE 0.040

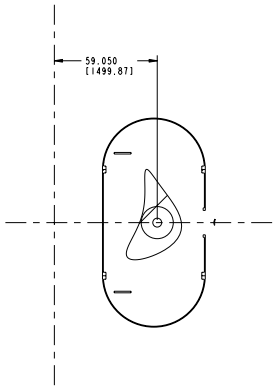

SECTION NB3-NB3
SCALE 0.040

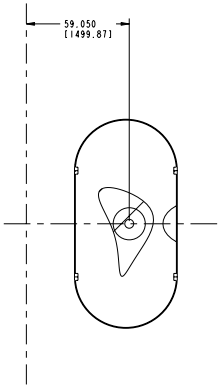

SECTION NB4-NB4
SCALE 0.040

AA.2

NEXT ASSY	CAGE CODE	PART OR IDENTIFYING NO	NOMENCLATURE OR DESCRIPTION	MATERIAL	SPECIFICATION	FIND NO
	I	S01E122A001-1	VV Assembly			7
	I	S01E131A001-1	TF COILS ASSEMBLY			6
	I	P-3C10A	--			5
	4	NB_AND_BEAMBOX_ASSY	--			4
	I	NBEAM-ASSY3	--			3
	I	PBX-M_PLAN	--	--	--	2
	I	PBX-M_FACILITY	--	--	--	1

NEXT ASSEMBLY — PARTS LIST

NO.	DATE	DESCRIPTION	BY

PRELIMINARY ISSUES
NOT APPROVED FOR CONSTRUCTION
EXCEPT AS NOTED
WELDING ENGINEER
APPVD: _____ DATE

COMPUTER GENERATED DRAWING
MANUAL CHANGES NOT PERMITTED

Pro E

DO NOT VERIFY INFORMATION BY SCALING DRAWING

NEXT ASSEMBLY

CENTRAL FILES:
UNLESS OTHERWISE SPECIFIED
DIMENSIONS ARE IN INCHES
MACHINE SURFACES
BREAK SHARP EDGES .005/.020

TOLERANCES NON-CUMULATIVE

DECIMAL-INCH		FRACTIONS	
.X	±.100	0°-30°	±1/16
.XX	±.030	30°-72°	±1/8
.XXX	±.005	72°-120°	±1/4
ANGULAR	±0°-15'	OVER 120°	±1/2

PRINCETON PLASMA PHYSICS LABORATORY
PRINCETON UNIVERSITY
NCSX PROJECT

NCSX
NEUTRAL BEAM POSITION

DIV: MECH. ENG.
ENG:
DWN:
CHK:
DATE:
APPROVED
CHK | SUPV
CADD FILE:

NBEAM-ASSY3

SHEET 1 OF 1 REV 0

NO.	REVISION	BY	CH	SUP	APPROVED	DATE

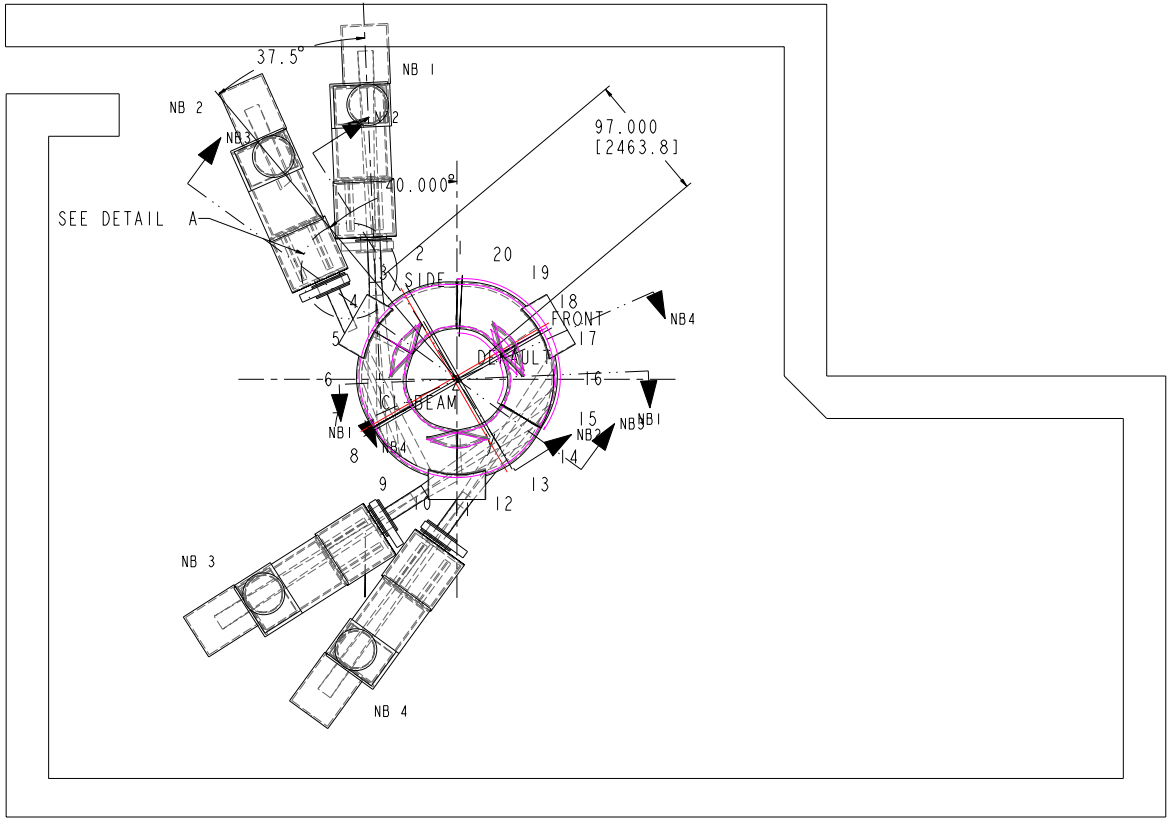

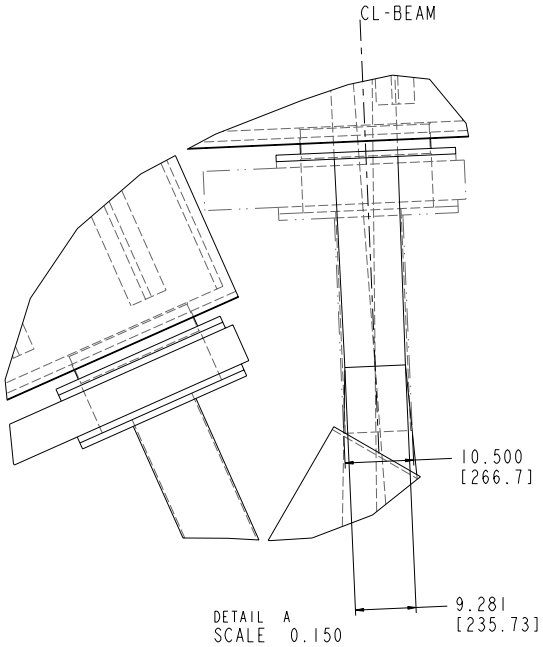

DETAIL A
SCALE 0.150

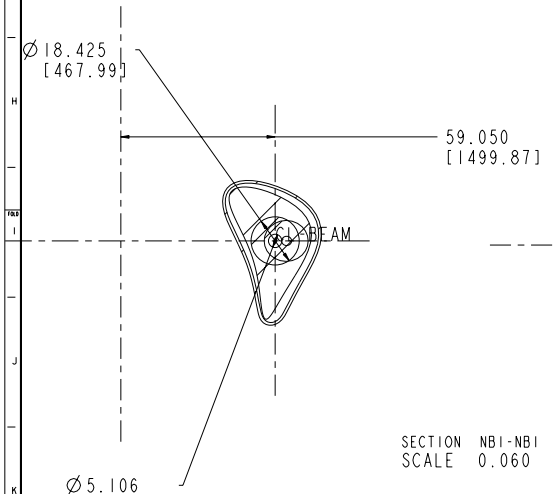

SECTION NB1-NB1
SCALE 0.060

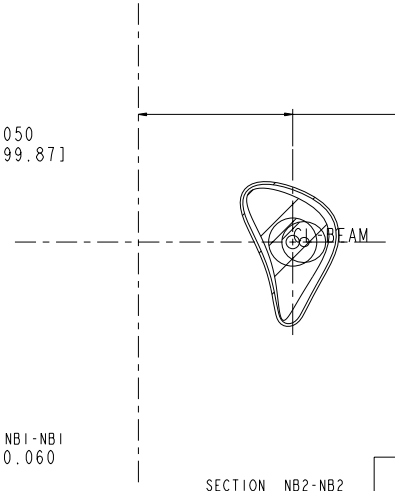

SECTION NB2-NB2
SCALE 0.060

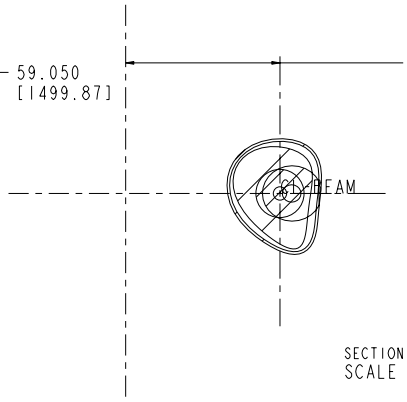

SECTION NB3-NB3
SCALE 0.060

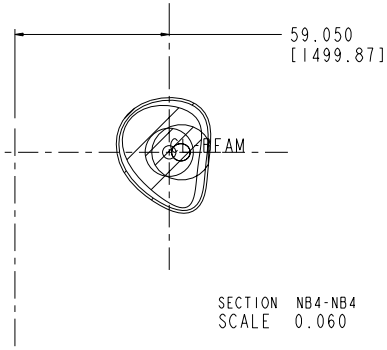

SECTION NB4-NB4
SCALE 0.060

Printed: 2/22/99

NO.	DATE	DESCRIPTION	BY

PRELIMINARY ISSUES
NOT APPROVED FOR CONSTRUCTION
EXCEPT AS NOTED
WELDING ENGINEER
APPVD:_____ DATE

COMPUTER GENERATED DRAWING
MANUAL CHANGES NOT PERMITTED

Pro E

DO NOT VERIFY INFORMATION BY SCALING DRAWING

NEXT ASSEMBLY

CENTRAL FILES:
UNLESS OTHERWISE SPECIFIED
DIMENSIONS ARE IN INCHES
MACHINE SURFACES
BREAK SHARP EDGES .005/.020

TOLERANCES NON-CUMULATIVE

DECIMAL-INCH		FRACTIONS	
.X	±.100	0'-10"	±1/16
.XX	±.030	10'-72"	±1/8
.XXX	±.005	72'-120"	±1/4
ANGULAR	±0°-15'	OVER 120"	±1/2

PRINCETON PLASMA PHYSICS LABORATORY
PRINCETON UNIVERSITY
NCSX PROJECT

NCSX
NEUTRAL BEAM POSITION

DIV: MECH. ENG.
DATE:
APPROVED
ENG:
DWN:
CHK:
CHK
SUPV
CADD FILE:
FULL-SIZE-SHELL-A
SHEET 1 OF 1
REV 0

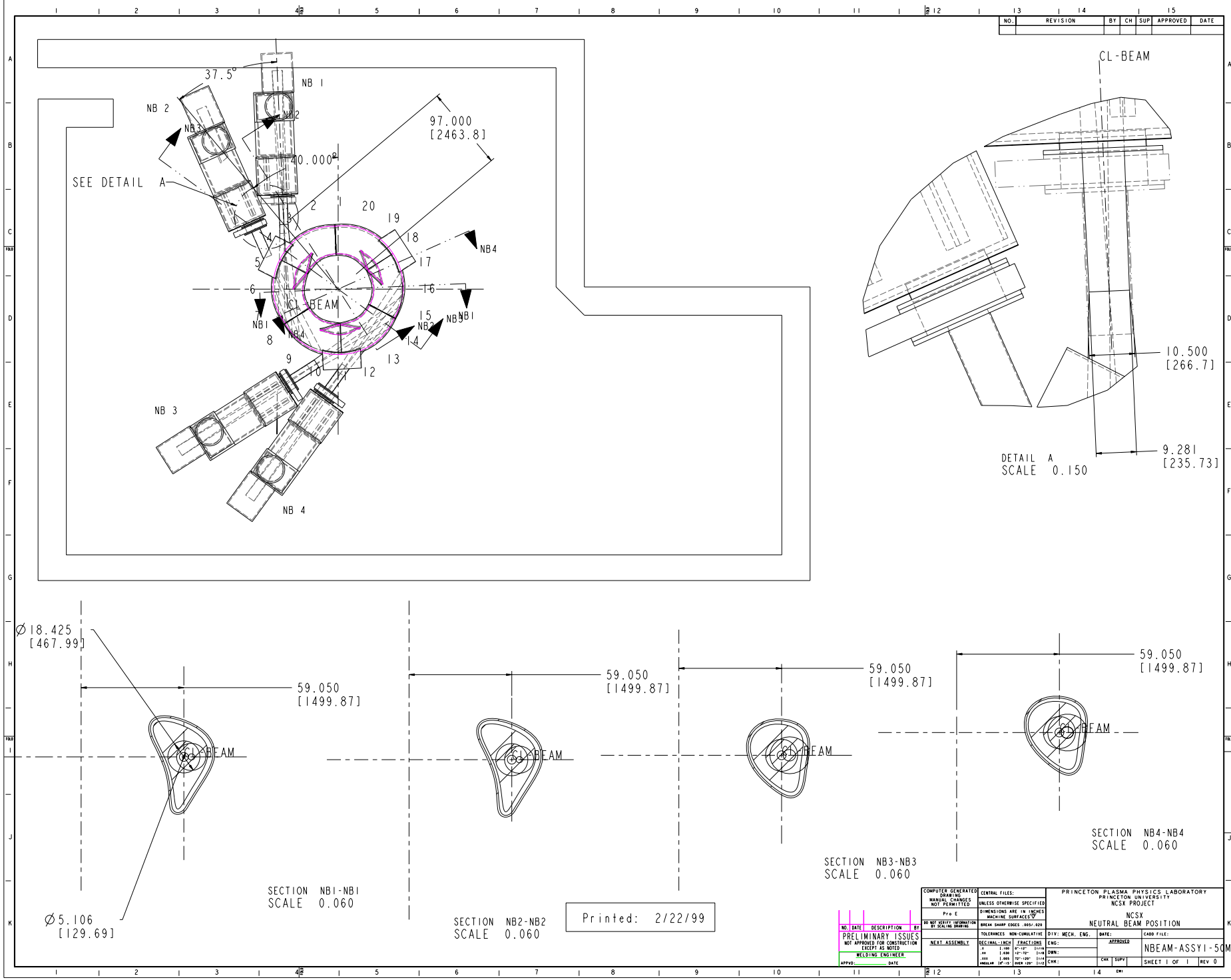

NO. REVISION BY CH SUP APPROVED DATE
37.5°
NB 1
NB 2
NB3
NB2
40.000°
97.000
[2463.8]
SEE DETAIL A
2
20
19
18
17
16
15
14
13
12
11
10
9
8
7
6
5
4
3
NB4
NB1
NB2
NB3
NB4
CL-BEAM
NB 3
NB 4
CL-BEAM
10.500
[266.7]
9.281
[235.73]
DETAIL A
SCALE 0.150
Ø18.425
[467.99]
59.050
[1499.87]
Ø5.106
[129.69]
SECTION NB1-NB1
SCALE 0.060
SECTION NB2-NB2
SCALE 0.060
SECTION NB3-NB3
SCALE 0.060
SECTION NB4-NB4
SCALE 0.060
Printed: 2/22/99
COMPUTER GENERATED DRAWING MANUAL CHANGES NOT PERMITTED
Pro E
DO NOT VERIFY INFORMATION BY SCALING DRAWING
NEXT ASSEMBLY
CENTRAL FILES:
UNLESS OTHERWISE SPECIFIED
DIMENSIONS ARE IN INCHES
MACHINE SURFACES
BREAK SHARP EDGES .005/.020
TOLERANCES NON-CUMULATIVE
DECIMAL-INCH
FRACTIONS
PRINCETON PLASMA PHYSICS LABORATORY
PRINCETON UNIVERSITY
NCSX PROJECT
NCSX
NEUTRAL BEAM POSITION
DIV: MECH. ENG.
DATE:
CADD FILE:
ENG:
DWN:
CHK:
SUPV
APPROVED
NBEAM-ASSY1-50MOD-B
SHEET 1 OF 1
REV 0
NO. DATE DESCRIPTION BY
PRELIMINARY ISSUES
NOT APPROVED FOR CONSTRUCTION EXCEPT AS NOTED
WELDING ENGINEER
APPVD: DATE

NO.	REVISION	BY	CH	SUP	APPROVED	DATE

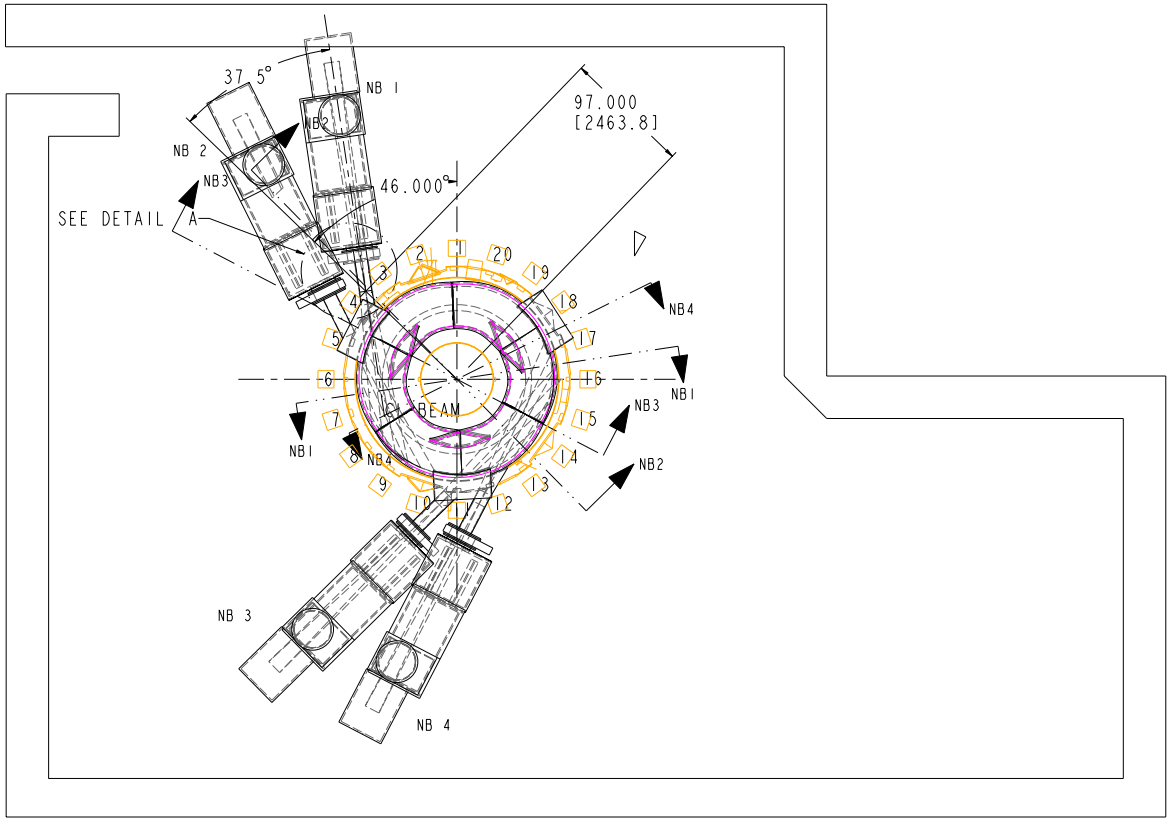

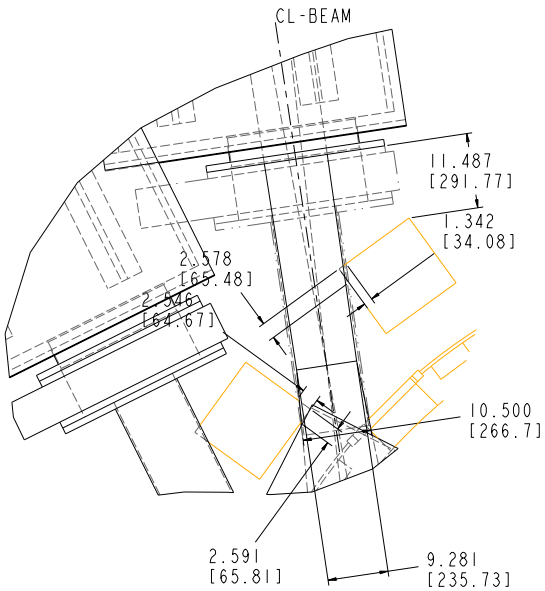

DETAIL A
SCALE 0.150

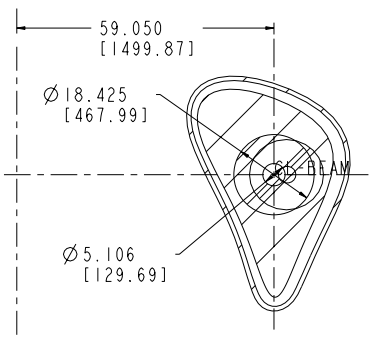

SECTION NB1-NB1
SCALE 0.100

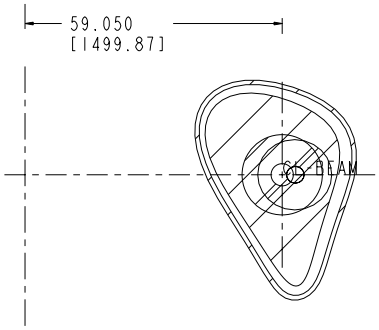

SECTION NB2-NB2
SCALE 0.100

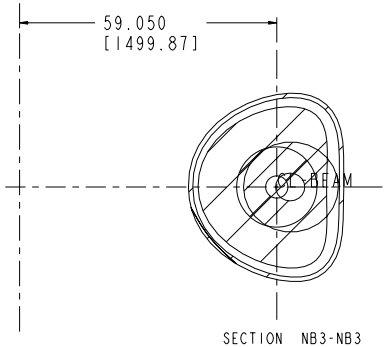

SECTION NB3-NB3
SCALE 0.100

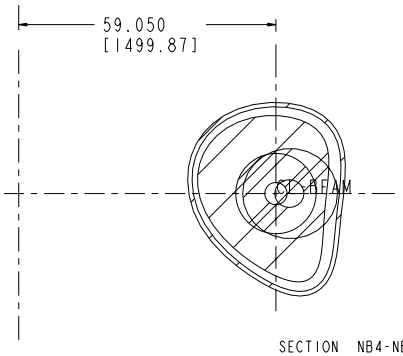

SECTION NB4-NB4
SCALE 0.100

Printed: 2/22/99

NO.	DATE	DESCRIPTION	BY

PRELIMINARY ISSUES
NOT APPROVED FOR CONSTRUCTION
EXCEPT AS NOTED
WELDING ENGINEER
APPVD:_____ DATE

COMPUTER GENERATED DRAWING
MANUAL CHANGES NOT PERMITTED

Pro E

DO NOT VERIFY INFORMATION BY SCALING DRAWING

NEXT ASSEMBLY

CENTRAL FILES:
UNLESS OTHERWISE SPECIFIED
DIMENSIONS ARE IN INCHES
MACHINE SURFACES
BREAK SHARP EDGES .005/.020

TOLERANCES NON-CUMULATIVE

DECIMAL-INCH		FRACTIONS	
.X	±.100	0°-30'	±1/16
.XX	±.030	30'-72'	±1/8
.XXX	±.005	72'-120'	±1/4
ANGULAR	±0°-15'	OVER 120'	±1/2

PRINCETON PLASMA PHYSICS LABORATORY
PRINCETON UNIVERSITY
NCSX PROJECT

NCSX
NEUTRAL BEAM POSITION

DIV: MECH. ENG.
ENG:
DWN:
CHK:
DATE:
APPROVED
CHK | SUPV

CADD FILE:
NBEAM-ASSY1-5MOD-A

SHEET 1 OF 1
REV 0

PTC Application Manager

Start | S02E10200-1.ASM | S02E10200.DRW | NCSX Workspace | Commonspace

Start Applications

- Login
- Pro/WORKSPACE
- Pro/COMMONSPACE
- Pro/ADMIN
- Pro/LOCATE
- Pro/PREFERENCES
- Pro/ENGINEER
- Exit Pro/INTRALINK
- Preferences
- About...
- Exit

Untitled - Notepad

File Edit Search Help

Have installed, at his site, the same Version and Build of Pro/INTRALINK that we are presently running that points to our Pro/INTRALINK server, with an account in Pro/INTRALINK and authorized (through INTRALINK) to access this data.

Workspace: NCSX

Workspace Objects Display Tools Reports Help

Status Update Check In Refresh Undo Redo Manager Info New Copy Modify Hold

Workspace: NCSX Frame: 1. Empty:

Workspace objects Show Objects: All Table Display: Default

? Type Name

Commonspace Browser

Object Display Bookmarks Tools Reports Help

Refresh Check Out Info BOM

Folders:

- Root Folder
  - Mike's Test Area
  - Rick001
  - Sherm's Test Area

Contents of Folder: Root Folder Table Display: Default

? Type Name

Aladdin Expand... | IomegaW... | Document Scrap 'H...

Zip 100 Plus (F) | Mathcad 6.0

!_llink20 | Media Player

!_PDM | MicroStati...

!_Pro20 | PALS

!_Util | RealPlayer G2

Butch Roberts.m... | Shortcut to PROE.pmw

CD Player | Shortcut to Workload....

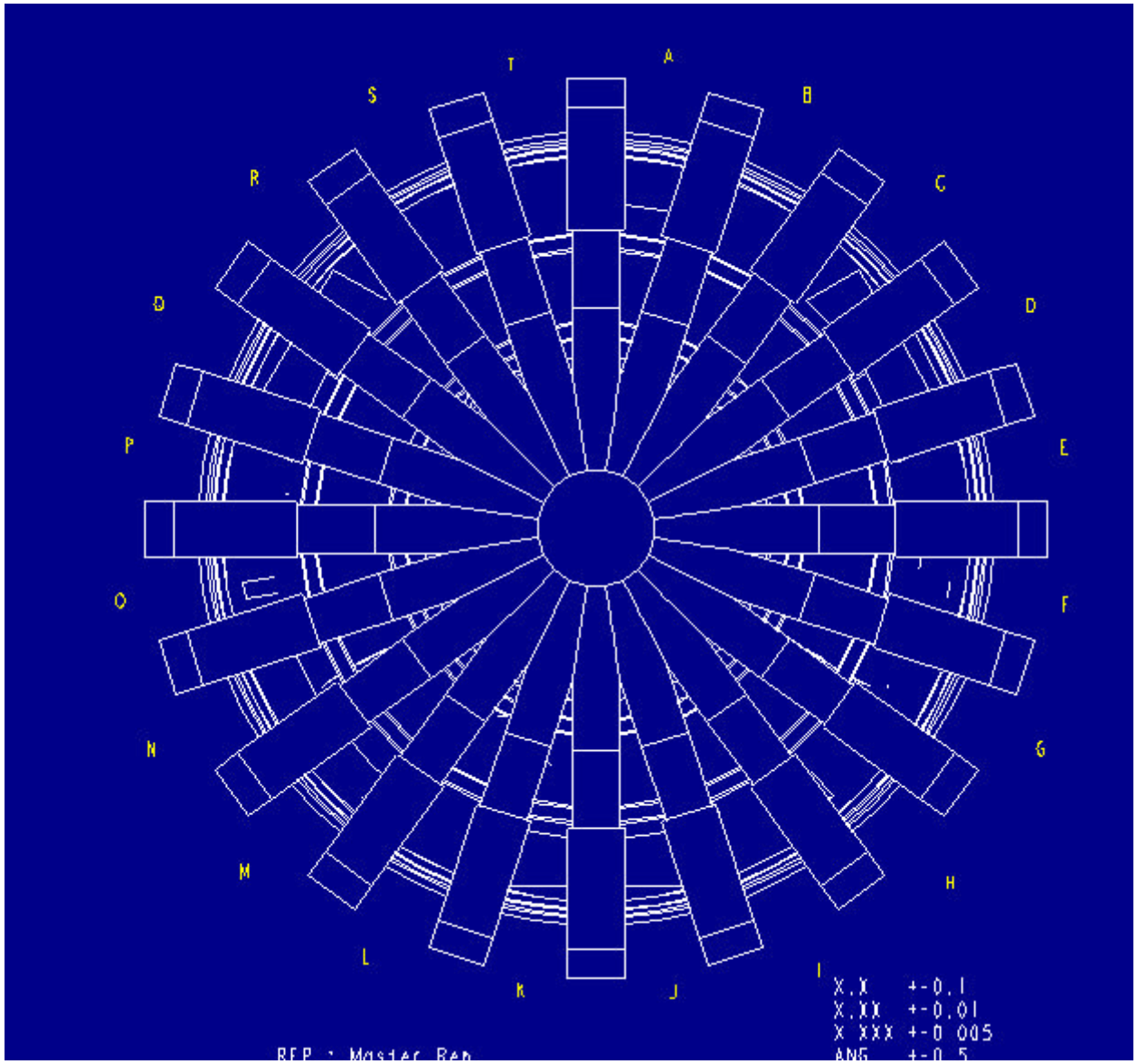
T
A
S
B
R
C
Q
D
P
E
O
F
N
G
M
H
L
I
K
J
X.X +-0.1
X.XX +-0.01
X.XXX +-0.005
ANG +-0.5
REF : Master Rad

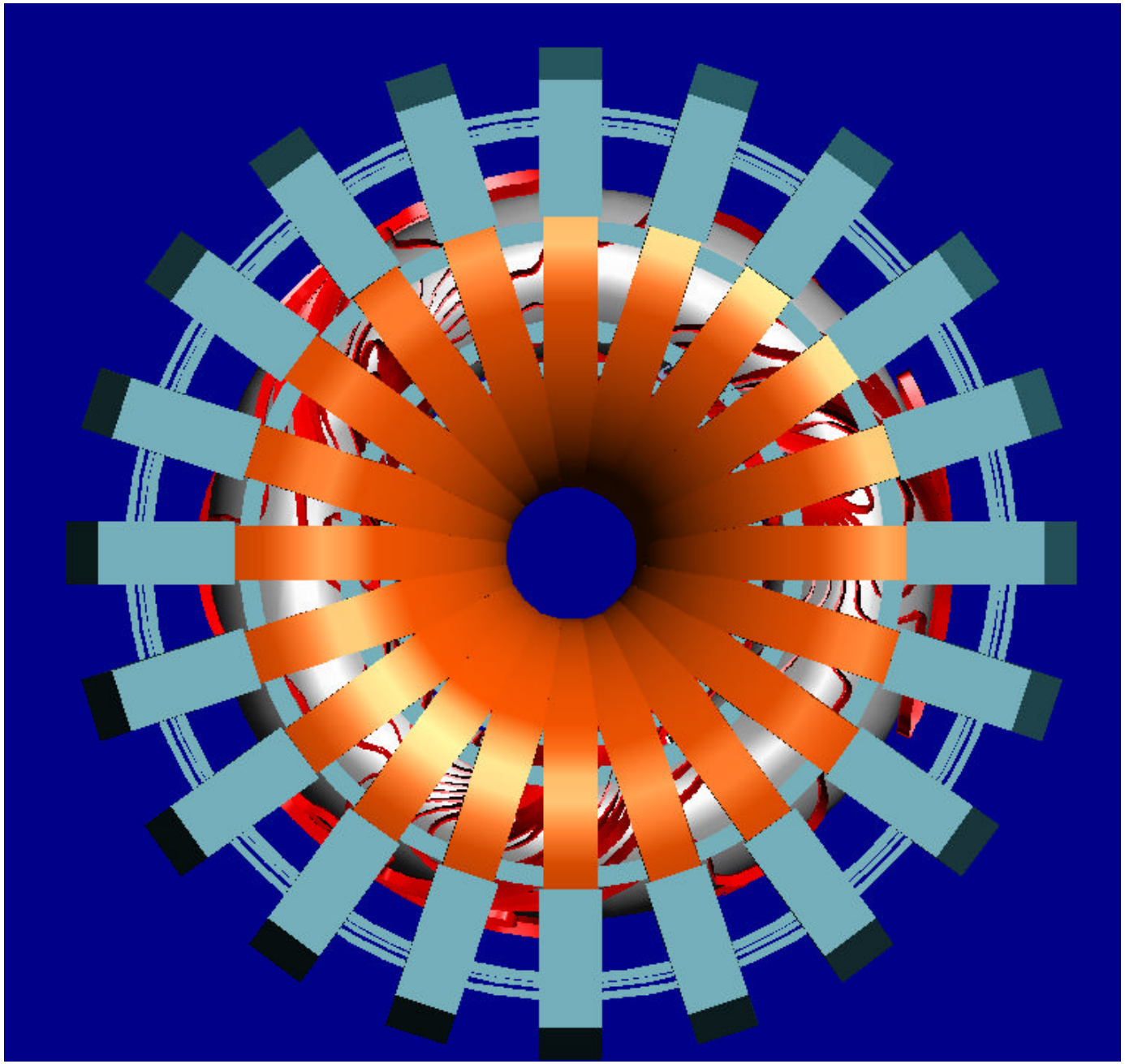

A-9

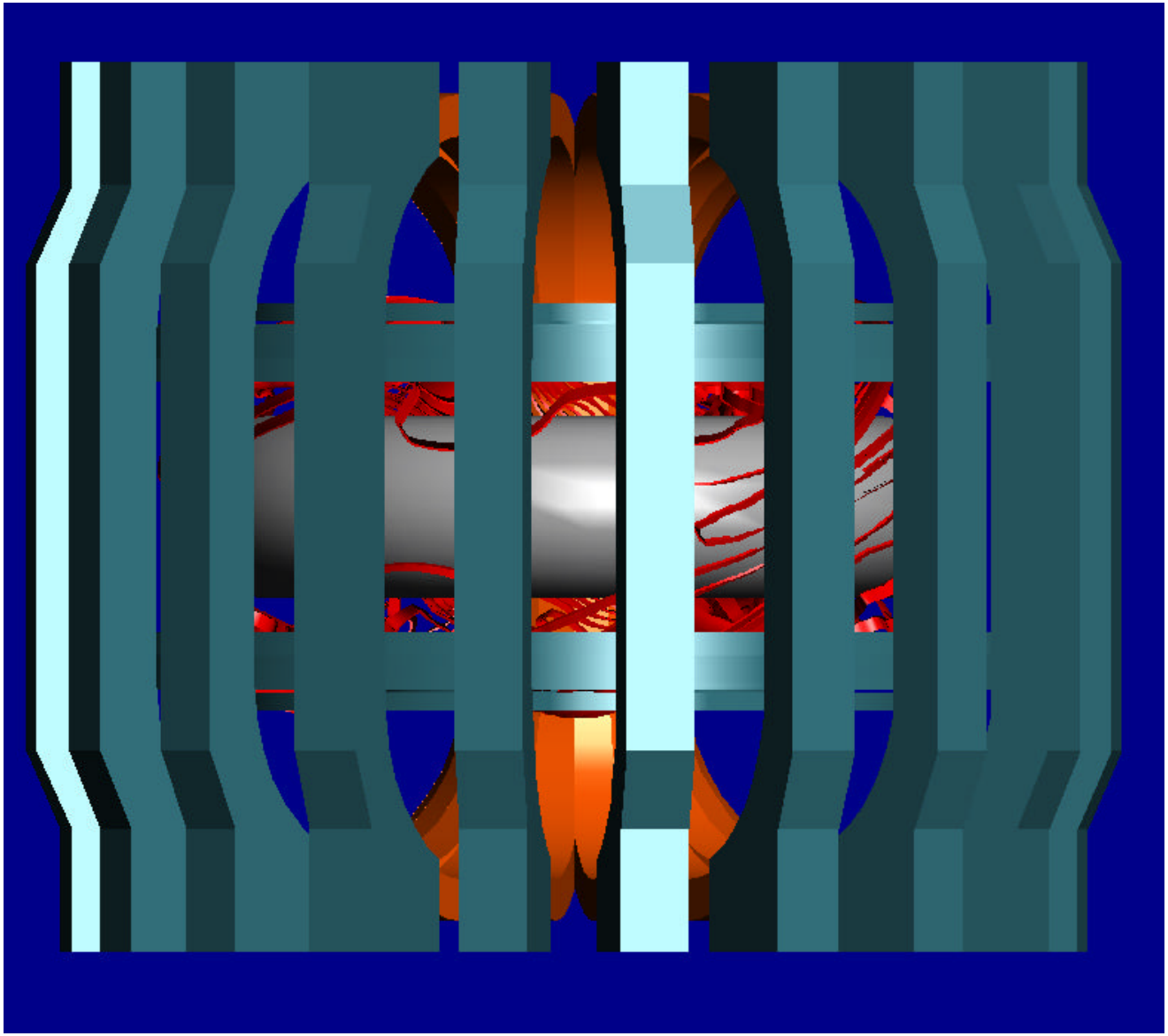

B-27

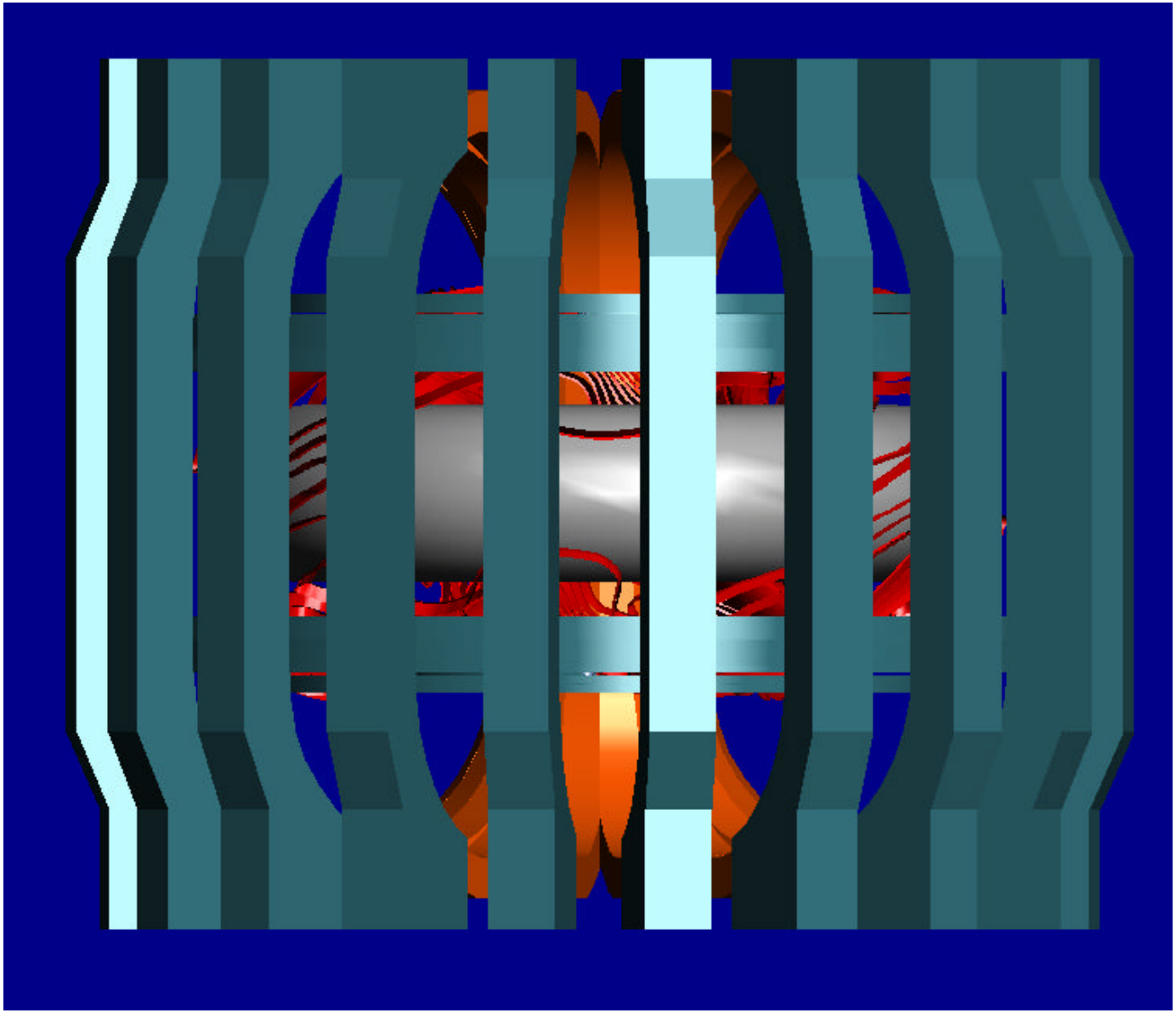

C-45

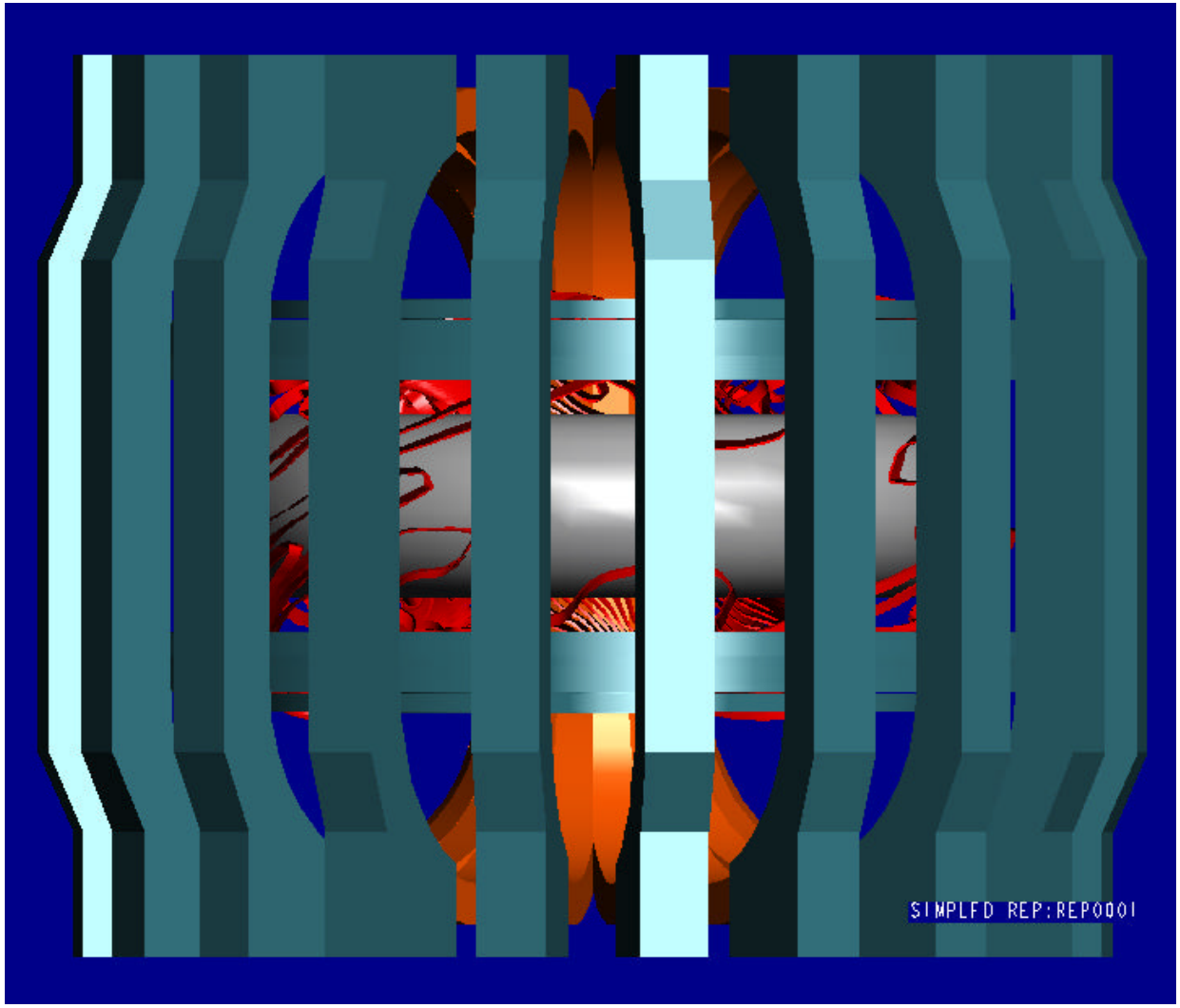

D-63

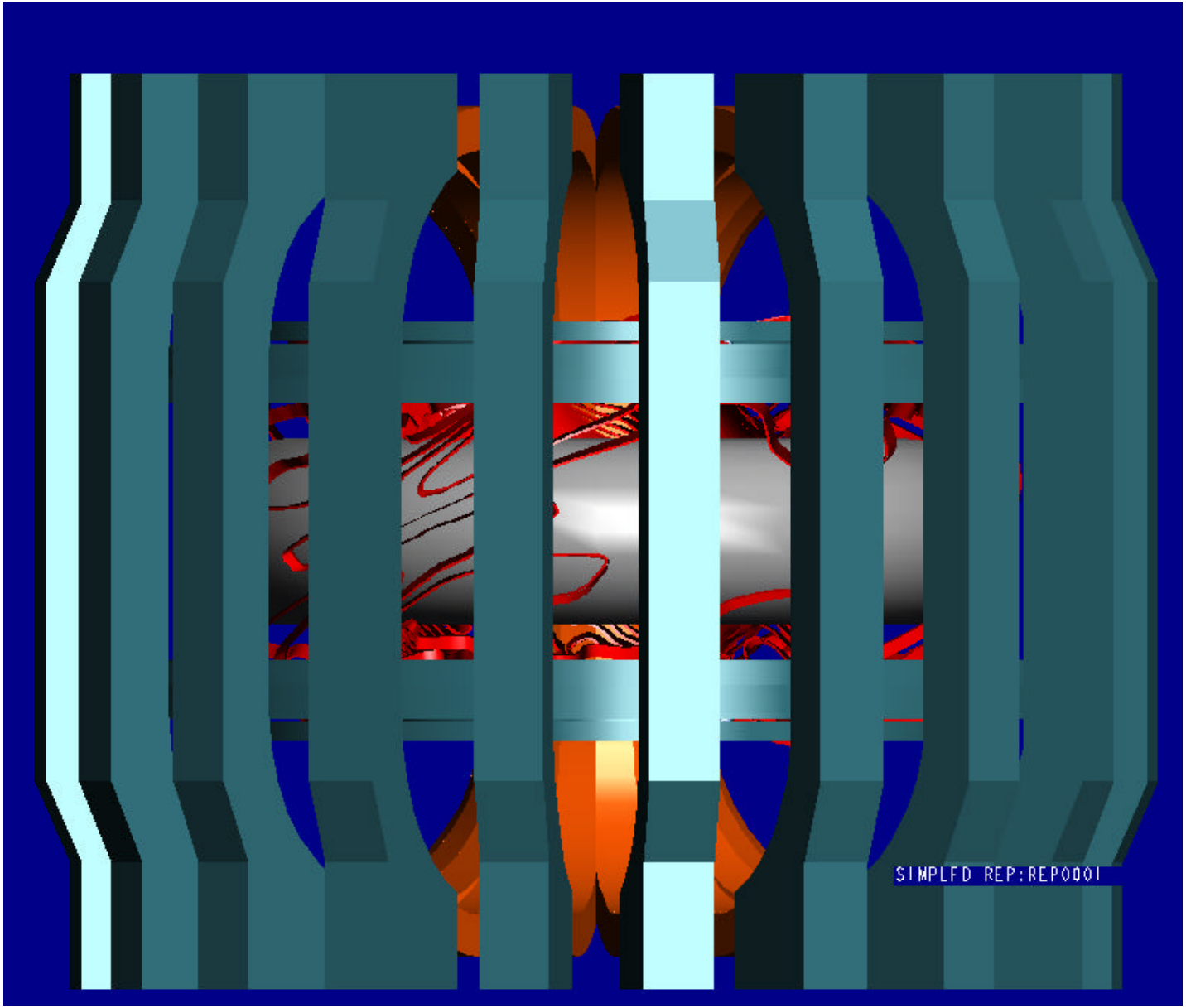

E-81

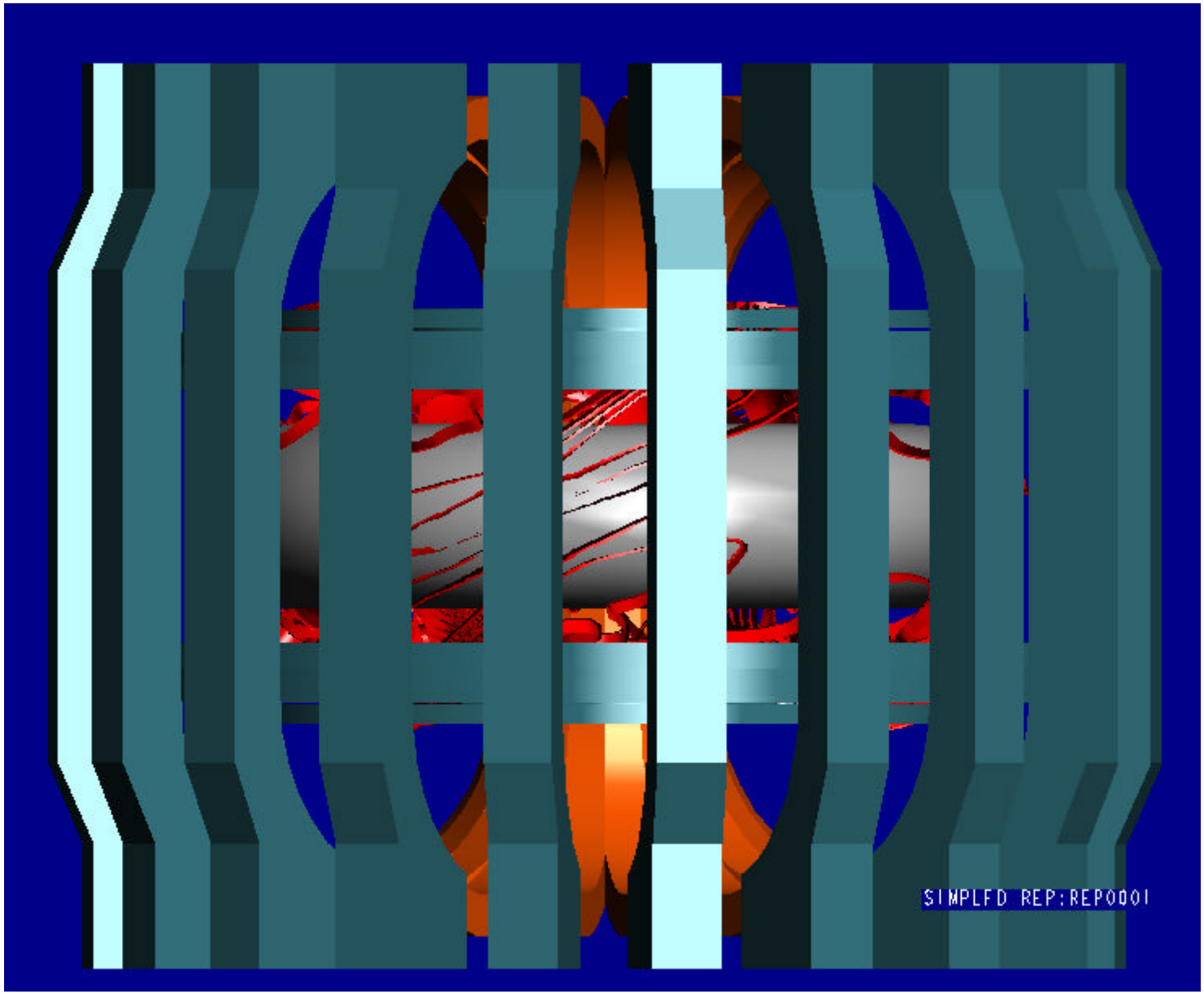

F-99

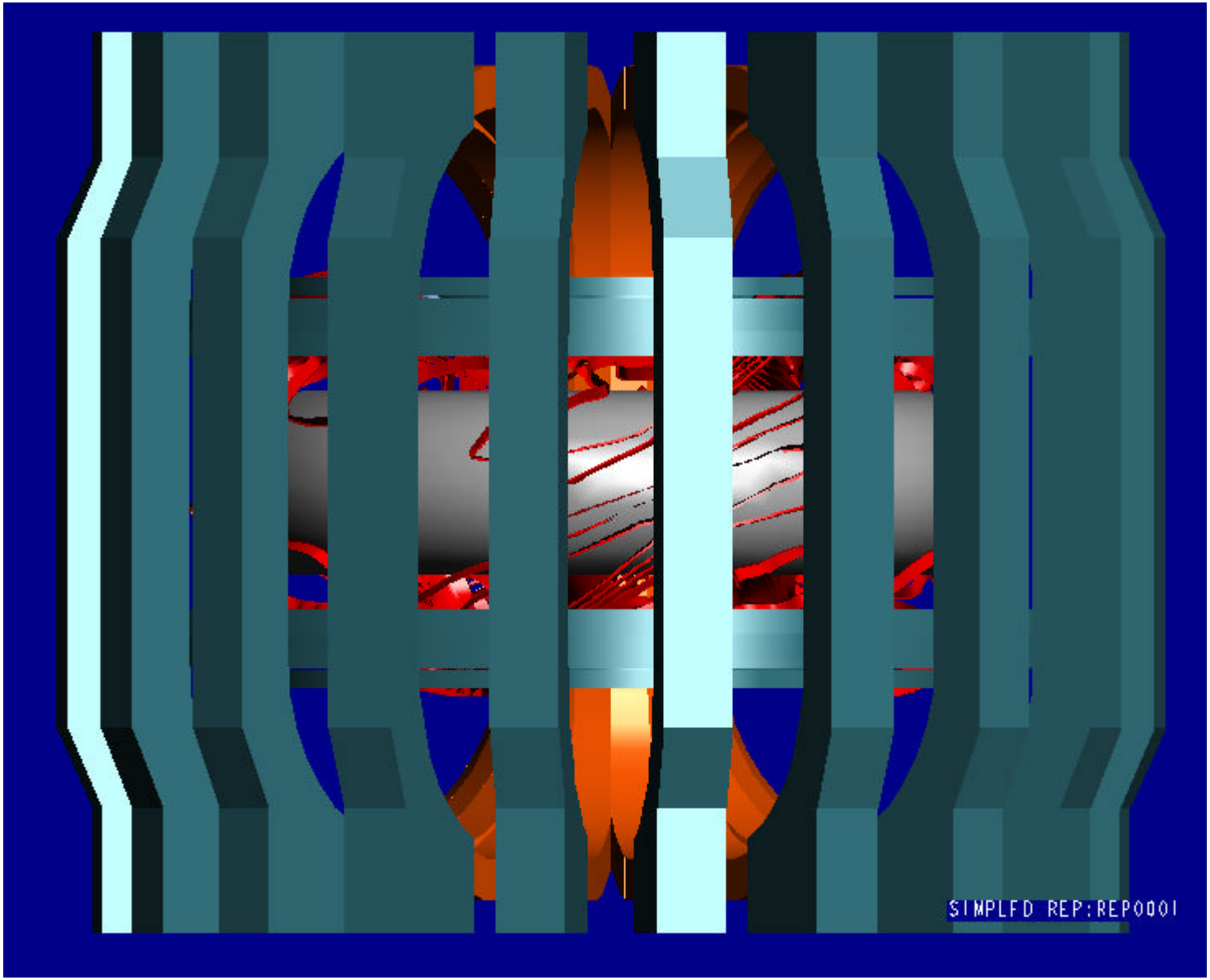

G-117

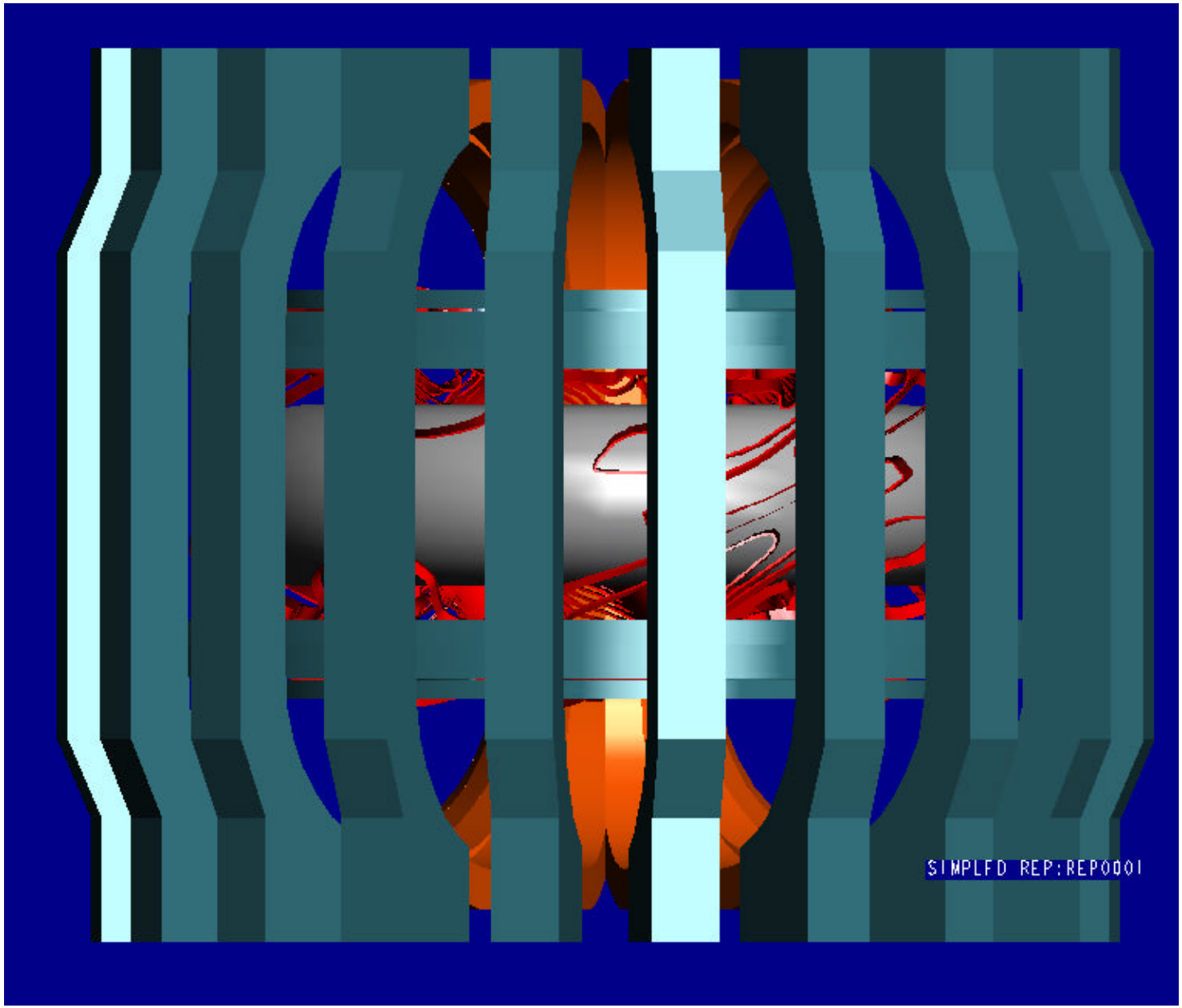

H-135

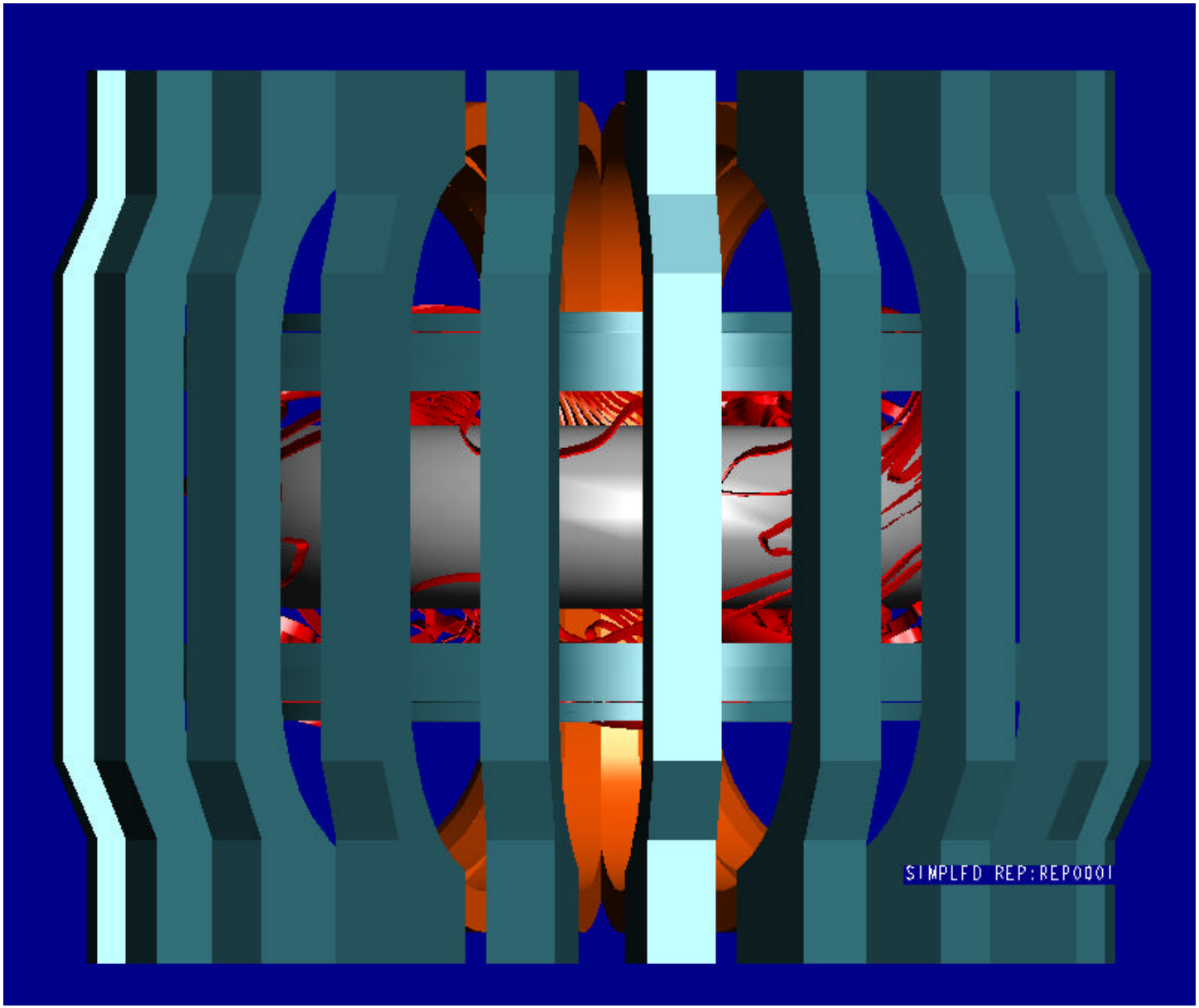

I-153

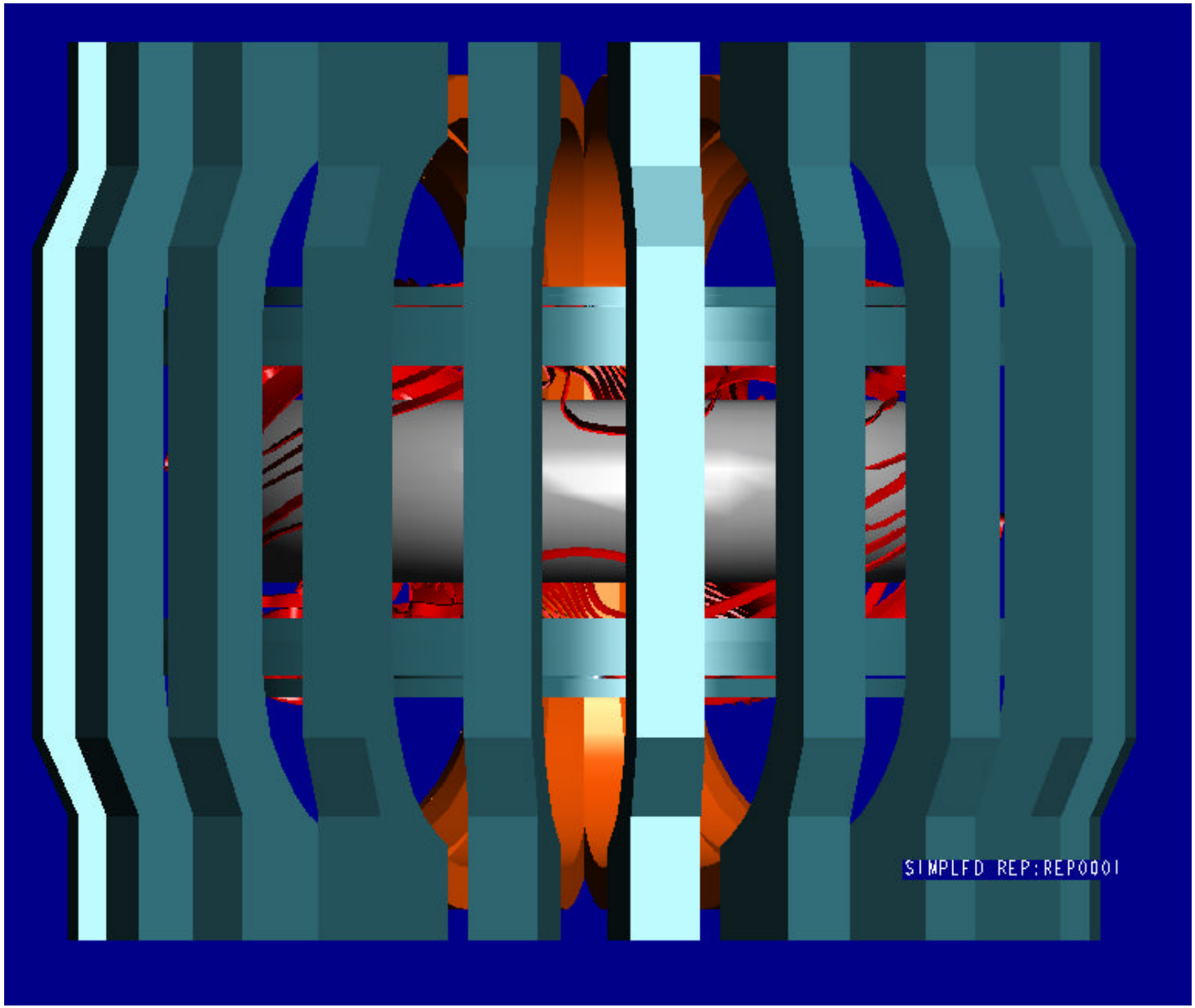

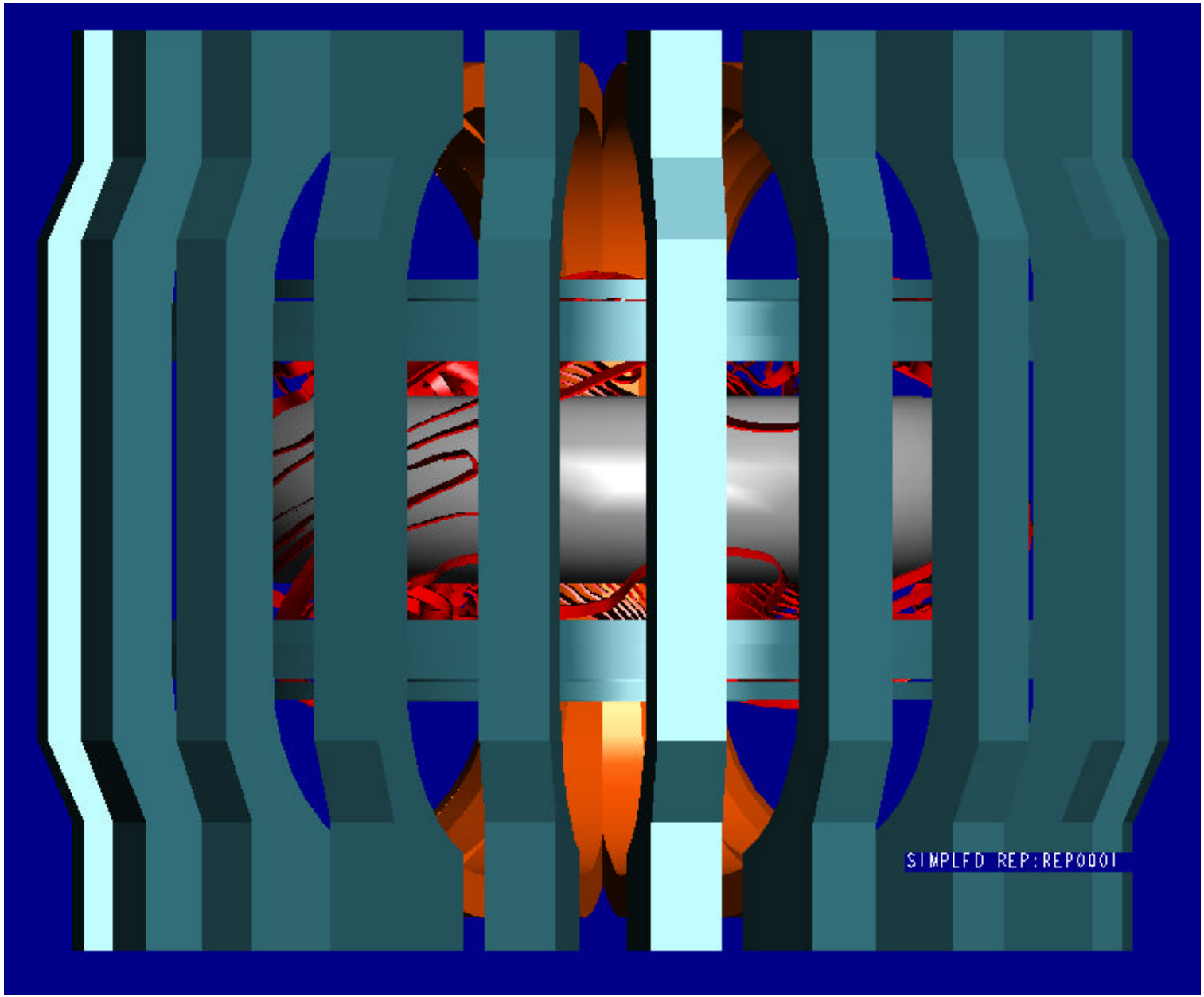
SIMPLFD REP:REP0001
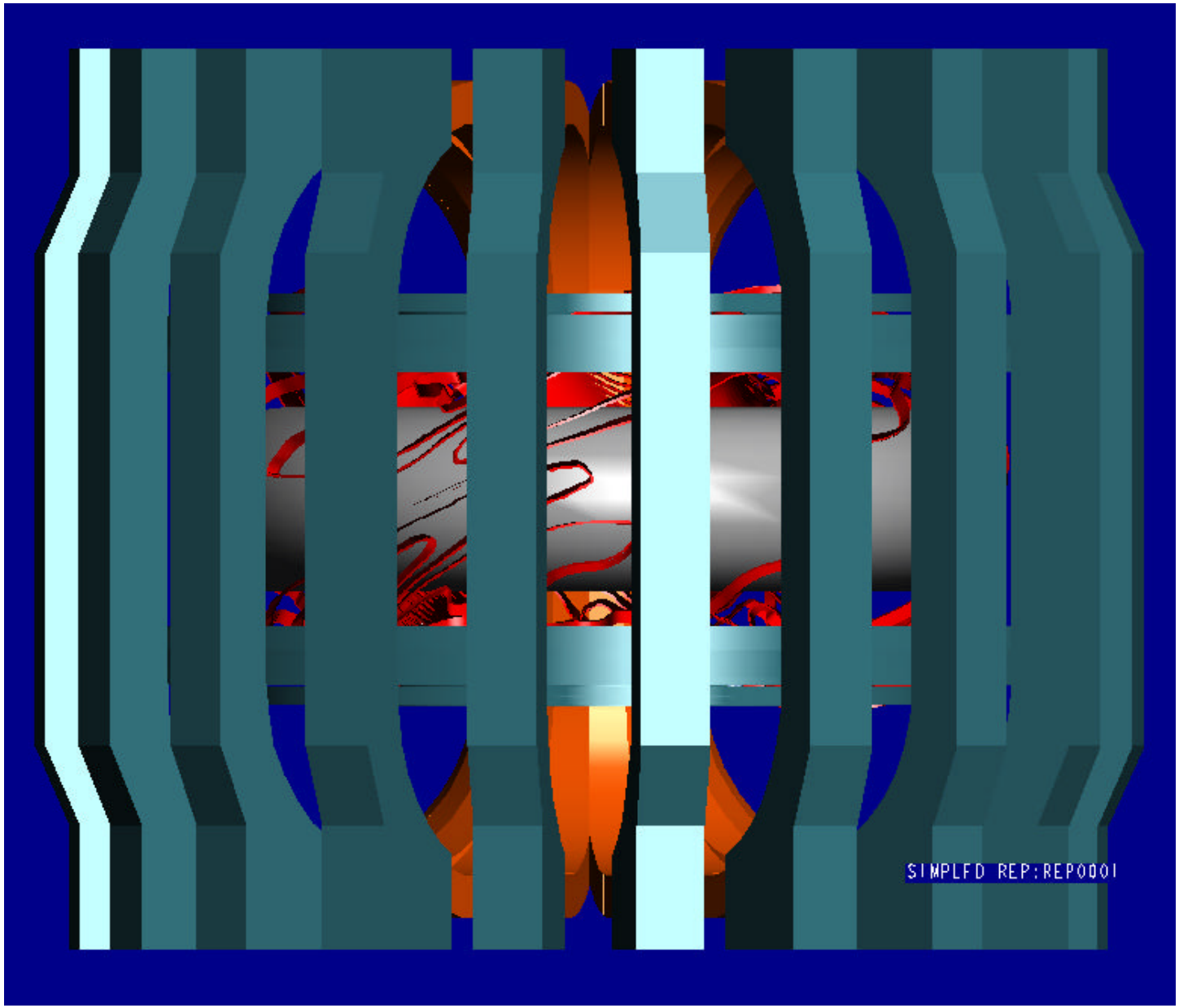
K-189