NCSX VACUUM LINER

DESIGN & FAB

OAK RIDGE,TN

P. L. GORANSON 5/05/99

NCSX VACUUM LINER

PRESENTATION OUTLINE

Requirements

Baseline Concept
- Liner Configuration
- Liner Parameters
- Fabrication Study
  - HSX
  - W7-AS, 7-X
- Material
  - SS
  - Inconel

Design Analysis to date
- Bake out heat heat balance
- Operation heat balance
- Disruption loads
- Stress

Issues & R&D Plans

VACUUM LINER DESIGN REQUIREMENTS/CRITERIA

- ATMOSPHERIC PRESSURE VACUUM BOUNDARY
  Leak tight $<10^{-5}$ t-l/s

- ALL METAL CONSTRUCTION
  magnetic permeability <1.02

- SUPPORT TILES, LIMITERS, NB ARMOR, DIAGNOSTICS
  Permit staged fab & installation

- PROVIDE TOROIDAL ELECTRICAL RESISTANCE
  time constant <10 ms

- PROVIDE RADIAL AND VERTICAL THERMAL EXPANSION
  1 cm radial

- PROVIDE BAKEOUT AT 350 C
  liner traced

- OPERATING TEMPERATURE - TBD

- INTERCEPT PLASMA HEAT

- PROVIDE PORTS
  access for 3 co-inject, 1 counter-inject NB

NCSX VACUUM LINER

LINER OPERATING PARAMETERS - 12 Mw OPERATION

AVERAGE PLASMA FLUX	32 w/cm^2
BAKE OUT TEMPERATURE	350 C
OPERATING TEMPERATURE	100 C (reqd if DOWTHERM used)
TEMPERATURE RISE DURING PULSE 3 sec flat top pulse 1.27 cm liner	21 C
THERMAL LOSS THRU SHELL DURING BAKE OUT 2.54 cm thermal blanket	10.4 kW
THERMAL LOSS THRU SHELL DURING OPERATION 2.54 cm thermal blanket	9.9 kW
THERMAL GROWTH DURING BAKE OUT	1 cm radial

NCSX VACUUM LINER

LINER STATS

BASELINE MATERIAL	316L SERIES STAINLESS STEEL
NOMINAL OUTER RADIUS	1.8 m (70.87”)
INNER R. VARIES BETWEEN	1.05 m - 1.46 m
APPROX. OUTER PERIMETER	11.31 m (445.26”)
MAX HEIGHT	1.28 m
THICKNESS	0.64 cm < T < 1.27 cm
INSIDE SURFACE AREA WITH PORTS	37.5 m^2 (58200 in^2)
ENCLOSED VOLUME	6.18 M^3 (218.4 FT^3)
WEIGHT (1.27 CM THICKNESS) WITHOUT PFC’S	3770 Kg (8300 LBS)

NCSX VACUUM LINER

BASELINE DESIGN AS OF 5/05/99

- ALL WELDED, STRUCTURAL VACUUM LINER
- FABRICATED FROM FLAT, DEVELOPED PATTERNS
- INSTALLED AROUND NCSX SHELL CORE IN THREE PIECES (COMPLETE PERIODS)
    - INTERNALLY WELDED AND LEAK CHECKED BEFORE OUTER SHELL INSTAL.
- TRACING WELDED OR BRAZED ON LINER OUTER WALL
- PFC MOUNTING PROVISIONS BUILT IN ON DAY ONE
    - ONLY LIMITER AND NB ARMOR TILES IN INITIAL OPERATION
- LINER SUPPORTED BY SADDLE COIL SHELL
    - RADIAL EXPANSION LUGS

Vacuum Vessel Configuration

Dimensions in inches

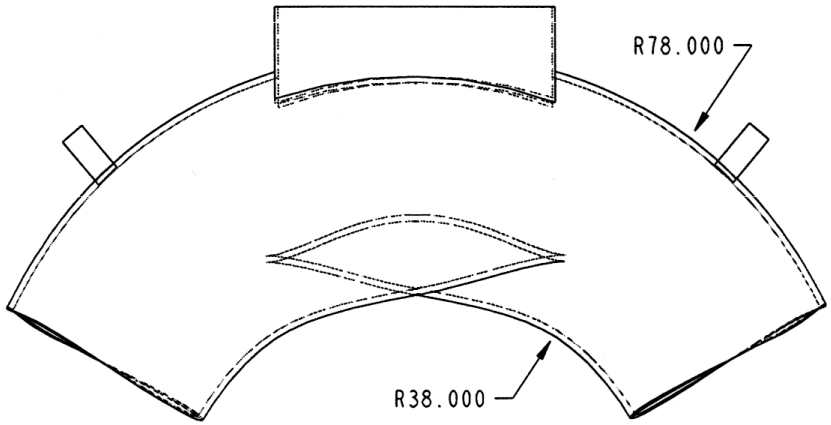

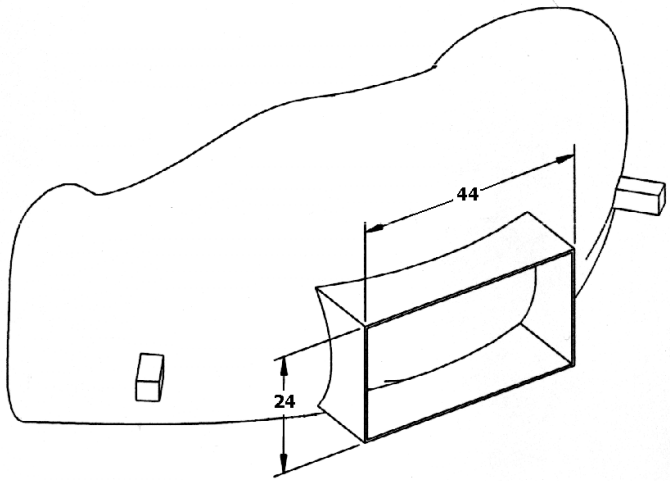

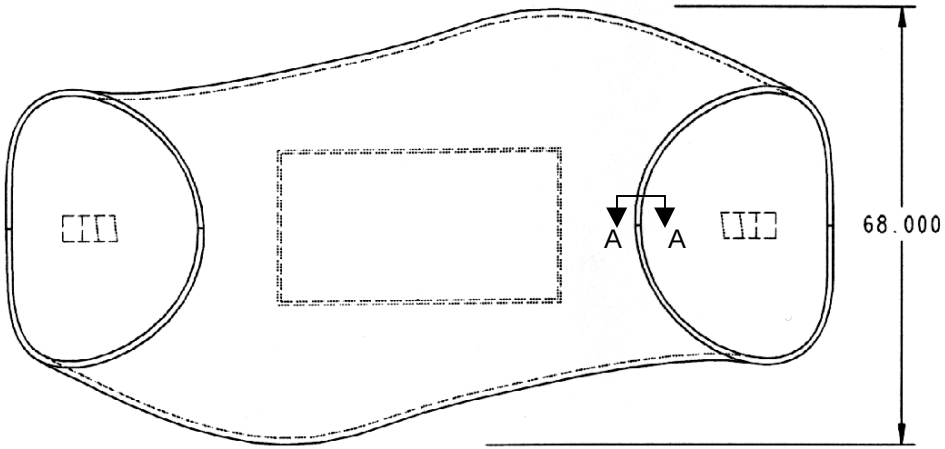

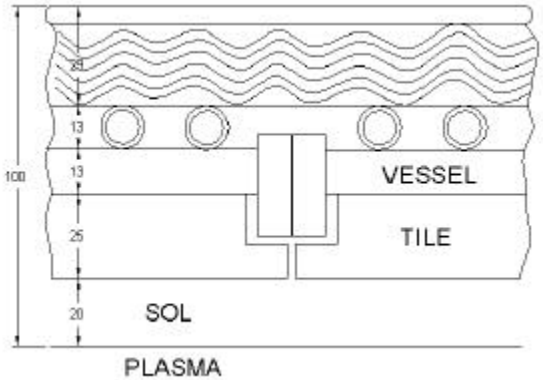

Section A-A

Dimensions in mm

Vacuum Tight Liner Fabrication
Two broad options are available:

- Contour forming to closely conform to plasma
- Baseline: Developed shape to approximate plasma contour

NCSX VACUUM LINER

LINER FAB CONTIN.

- Liner segments could be a developed shape, parts made directly from sheet stock
  - flat patterned
  - brake bent into shape
  - mated with ribs
  - has precedence with WENDELSTEIN W VII - AS

- Developed liner would approximate shape of plasma
  - Series of trapezoids or triangles which approximate shape(prismatic)

- Requires no tooling, can be described mathematically
  - tools are in place
  - drawn full scale on ProE
  - brake bend lines included

- Method is not sensitive to number of machine periods

Vacuum Vessel Design Issues

Material / Magnetic Permeability

Options -

- 316L Stainless Steel
  - Pro - Inexpensive, easy to machine
  - Con - Permeability increase due to cold work, welding
    - Inconel weld filler not compatible with 350-C

- Inconel 625
  - Pro - Better strength, higher resistivity, non-magnetic
  - Con - Higher cost, flange attachment

Status -

- Research of other facilities' design practice in progress

Device	Material	Magnetic Permeability	How Achieved
ATF	1/4-in 304 SS	1.02	Inconel Weld Filler
HSX	5/16-in 304 SS	1.02	Solution Anneal at 1900F, 2Hrs
W VII-AS	1/2-in SS		

Vacuum Vessel Design Issues

HSX Fabrication Experience
(Email from D. Anderson to J. Lyon, 3/2/99)

- Used preform composed of several rough pieces welded together
- Mold also several pieces to allow part removal
- Part was annealed prior to final shot in order to reduce magnetic permeability
- Vendor wanted $425k to build molds and develop process
- UW performed for $200k and lots of labor

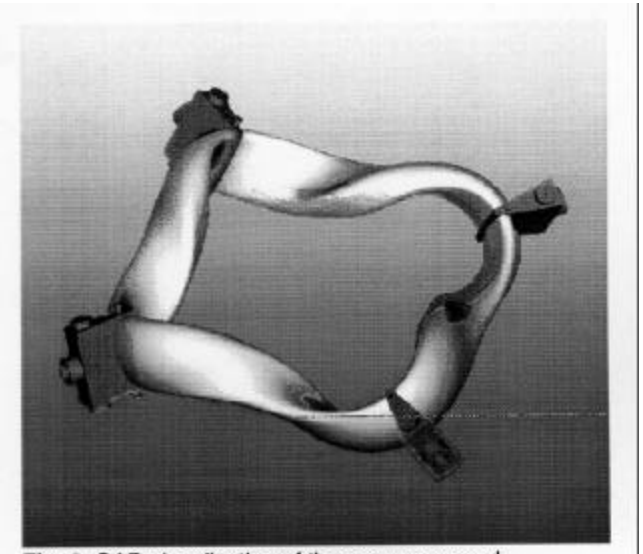

Fig. 2. CAD visualization of the vacuum vessel components.

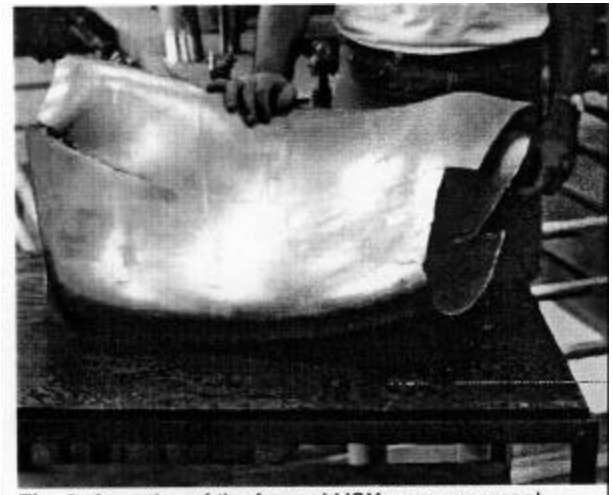

Fig. 3. A section of the formed HSX vacuum vessel.

Vacuum Vessel Design Issues

W 7 - AS/X Fabrication

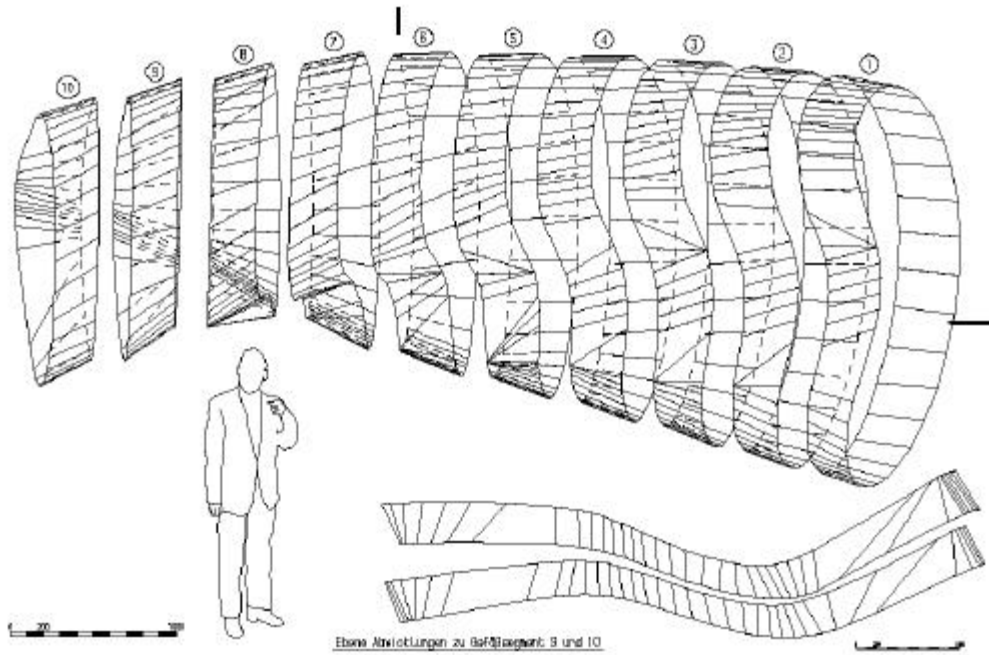

Fig. 5. Design principle of the outer and inner vacuum vessel for the W7-X cryostat.

Summary of letter form Joerg Sapper, WENDELSTEIN7-X, 4/27/99

1) The material for vessel was DIN 1.4311 corresponding to AISI 304 LN.

2) Checked other manufacturing methods :
- explosive forming
- isostatic
- pressure forming
- pressing of large shell elements.

Outcome was that number of required trials presented more expensive and risk than bending method. Also, there is possibility of stepwise adjustment during fabrication with bending method.

3) Exclusively used TIG welding.
- No problem with weld distortion using a multi-layer welding with low heat impact.
- Used steady state geometrical observation system.
- Continuous readjusted welding procedure, changing location and direction of welding.

5) Required and achieved a contour-tolerance of 3.5 mm.
- At segments ends it was 0.5 mm between each of segments.
- Tolerance of module in circumferential direction was better then 0.5 mm.

6) No parts "killed" or re-done. Test portion of one period was built which included all typical difficulties.
- Same being done for W7-X.
- This is most worth-wile procedure.

7) No problems with permeability at all using the above mentioned steel and corresponding welding wire and procedures.

8) Would never use stress relieve procedures for such a vessel.
- Temperature must be beyond 1050 °C ; would get new problems with accuracy.

Summary of letter form Joerg Sapper, WENDELSTEIN7-X, 4/27/99

9) Recommend using same method for any future vessel of similar size.
- HSX was too small and thick for this method.
- Method depends on sheet /thickness ratio.

10) Sources
- Some companies adamantly reject method and some others clearly vote for it.
- Performance depends always on their experience.
- Best experience will be found companies producing water turbines for hydro power plants.
- Sulzer in Switzerland.
- Believe that Chicago Bridge and Iron in the States does same.

NCSX LINER HEAT BALANCE STUDY

Bake Out - Study done to determine effect of insulation thickness and determine heat losses through shell.

Configuration

- Liner bake out at 350 C.
  - shell at room temperature.

- Microtherm insulation around liner protects shell.

- All heat removal done in annulus around exterior of shell.
  - forced N2 convection.
  - inlet gas at 20 C.
  - gas temperature rise 20 C.

Results

- Heat transfer mechanism is adequate.
  - gradient across thickness of shell only about 1 C.
  - temperature rise due to film coef. only 5 C.

- Microtherm insulation can be reduced from 2.5 cm to 1.27 cm, however:
  - there is a price to pay.
    - heat load goes up from 10.4 kW to 20 kW.
    - N2 flow goes up from 924 cfm to 1800 cfm.

NCSX TEMPERATURE PROFILE DURING BAKE OUT - Case 1. During heat up, gap between liner and insulation.

All dimensions in cm. Temperatures are C.

Bakeout Tb= 350 deltaT= 325

ASSUME: Cooling gas Tp= 20

350 C BAKE OUT

N2 cooling gas inlet temperature 20 C

First cut guess at microtherm outer temperature = 88 C.

Aluminum Bronze Shell

Re= (1/Ao)(Li/Ki+Ln/Kn+Ls/K

Li= insulation thickness

Ln= 1

Ls= 13.2

Ao= 1

At= 375000

Q= deltaT/Re

Ki= 0.0002 W/cmK

Kn= 0.0003 W/cmK

Ks= 0.36 W/cmK

Vsn= 1.142 Density

Cpn= 1040 Spec. heat

d=2.5

vk=1.563e-5 Kinematic visc.

Ac=0.586 m^2 Passage area

Pr=.713 Prandtl no.

Li microtherm thickness	**Re thermal resistance**	**Q** W/cm^2	**Qt** W total	**Ti-n** drop	**Tn-s** drop	**Ts-p** drop	**Ti-n** interface temp	**Tn-s** interface temp	**Ts-p** interface temp	**N2** temp rise (GIVEN)	**N2** flow m^3/s	**N2** flow CFM	Re	hc film coef w/cm^2K	Tsf across film K
2.54	14828	0.02192	8219	250	75	0.80	100	25.80	25	20	0.35	733	1889	0.0048	4.59
2	12407	0.02620	9823	235	89	0.96	115	25.96	25	20	0.41	876	2258	0.0055	4.75
1.27	9133	0.03558	13344	203	121	1.30	147	26.30	25	20	0.56	1190	3067	0.0070	5.05

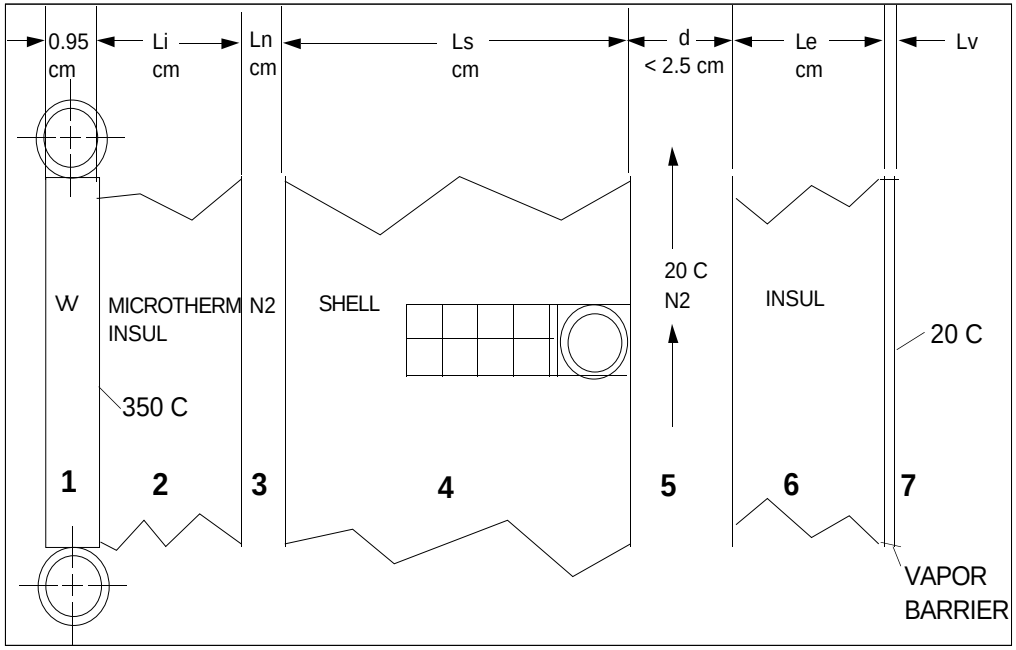

BAKE OUT 5/3/99

Heat Load 10.4 Kw

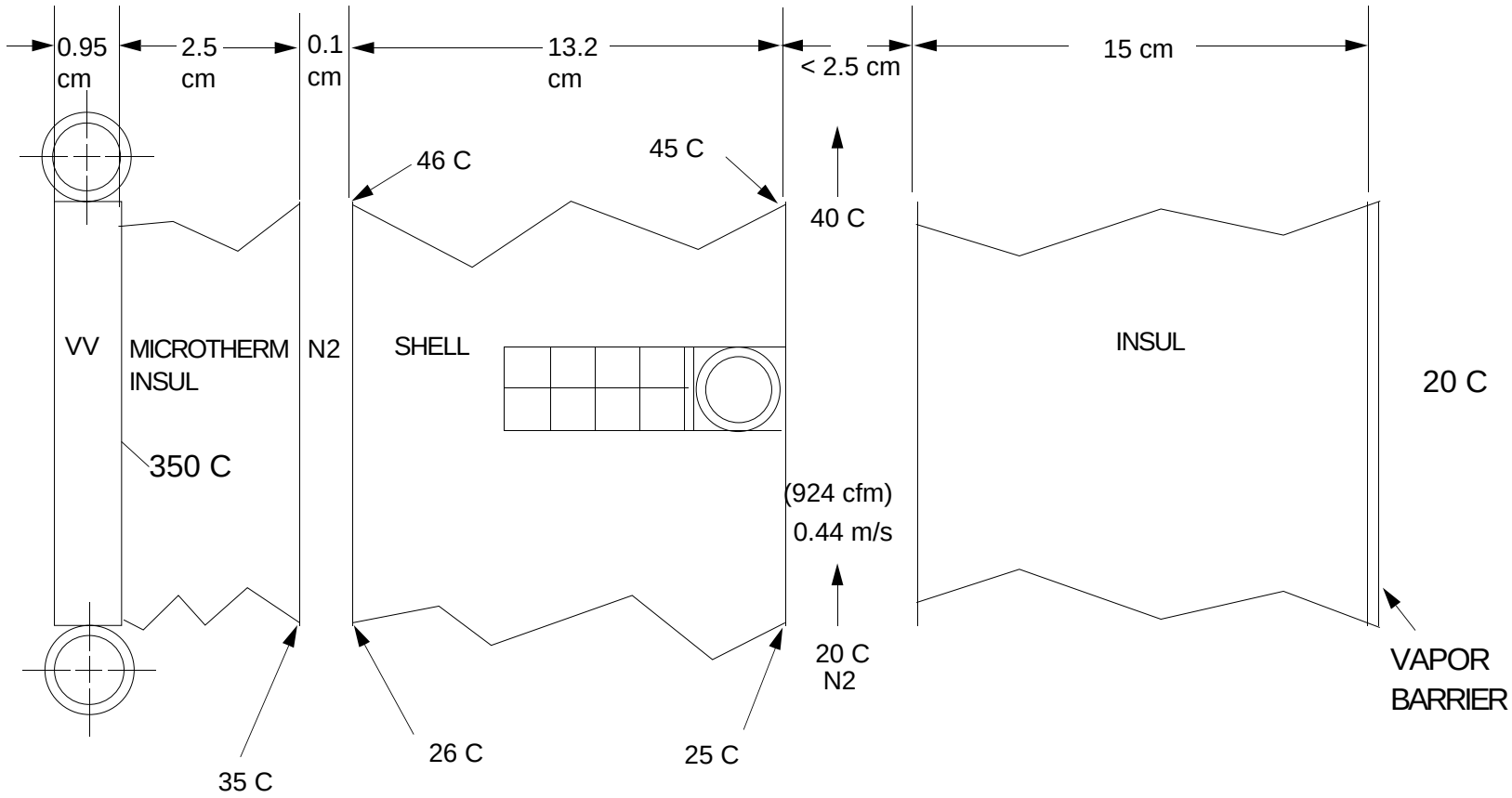

BAKE OUT 5/3/99

Heat Load 20 Kw

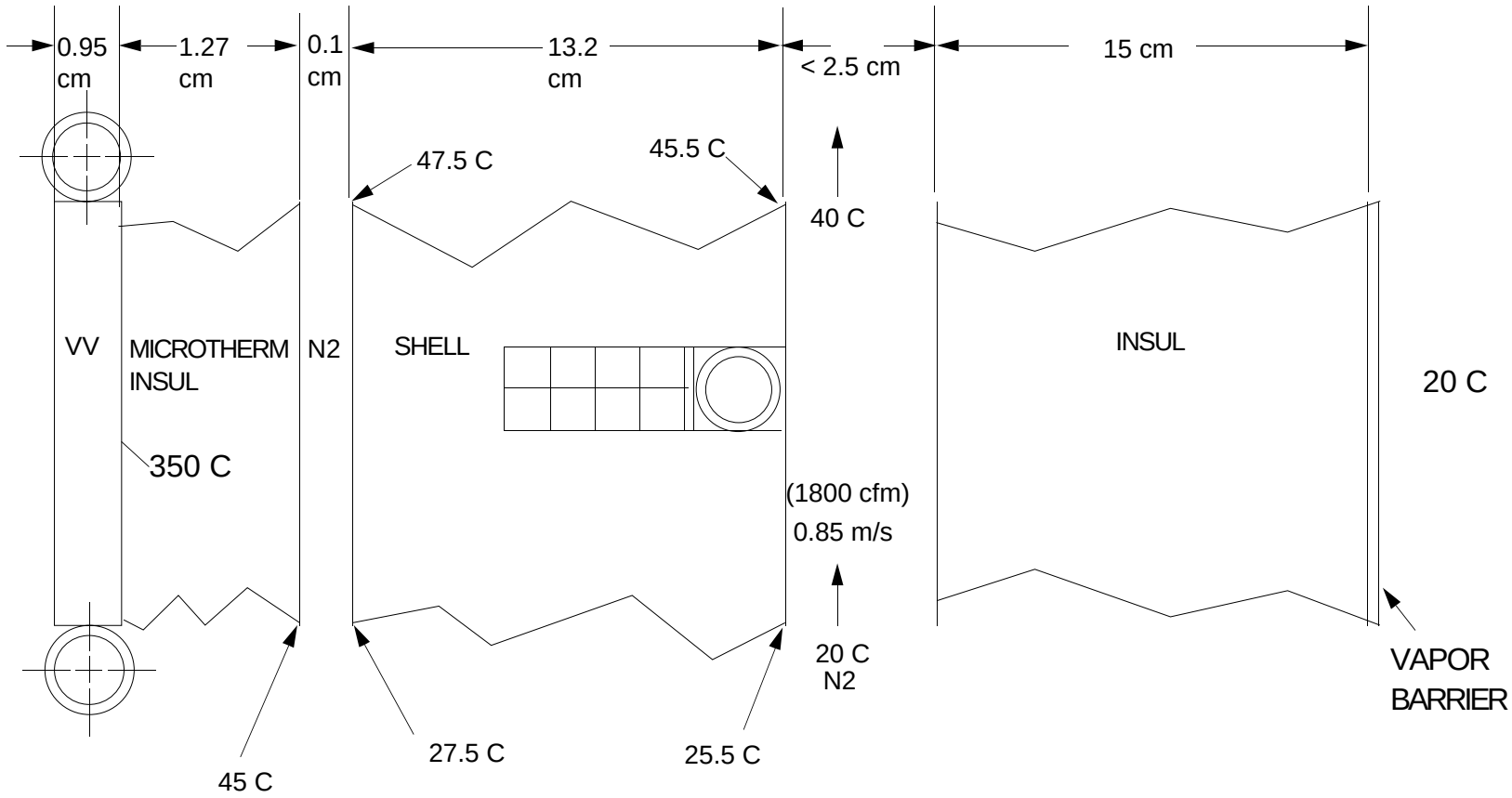

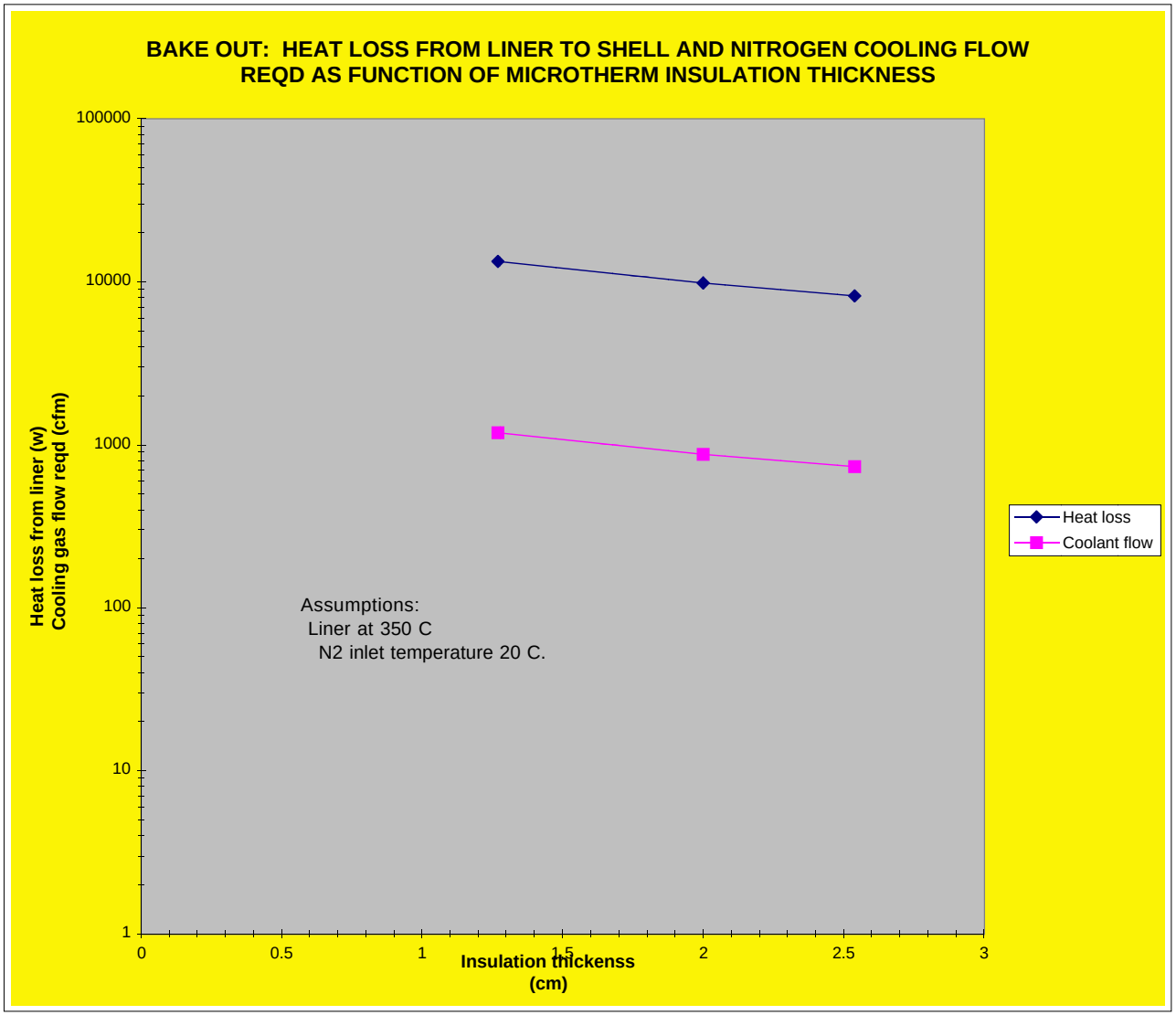
BAKE OUT: HEAT LOSS FROM LINER TO SHELL AND NITROGEN COOLING FLOW
REQD AS FUNCTION OF MICROTHERM INSULATION THICKNESS
Heat loss from liner (w)
Cooling gas flow reqd (cfm)
100000
10000
1000
100
10
1
0
0.5
1
1.5
2
2.5
3
Insulation thickenss
(cm)
Assumptions:
Liner at 350 C
N2 inlet temperature 20 C.
Heat loss
Coolant flow

Conclusions

- N2 gas flow must be turbulent
  - annulus < 2.5 cm
  - velocity in the range of 0.44 m/s to 0.85 m/s, depending on insulation thickness.

- Laminar flow would result in high, ~ 190 C rise in shell.

NCSX LINER HEAT BALANCE STUDY

OPERATION - Study done to determine effect of insulation thickness and determine heat losses through shell.

Configuration

- Liner assumed at 100 C.
  - Use of Dowtherm requires high temperature to reduce viscosity.
- Shell at 100 K.
- Microtherm insulation around liner limits heat loss into shell.
- A minimum of 15 cm of insulation around shell exterior.
  - Prevent icing
- All heat removal done in annulus around exterior of shell.
  - Two possibles:

    forced N2 convection.
    pool boiling

NCSX LINER HEAT BALANCE STUDY

OPERATION CONTINUED

Results

- Microtherm insulation can be reduced from 2.5 cm to 1.27 cm, however:
  - There is a price to pay.
    - Heat load goes up from 9.9 kW to 20 kW.
    - LN2 consumption goes up from 3.7 l/min to 6.6 l/min.

- LN2 consumption may be reduced by lowering liner operation temperature:
  - Issue
    - Coolant medium could not be Dowtherm.
    - Steam could be used for bake out but could cause icing during subzero operation if water not completely cleared from lines.
    - Room temperature operation results in only 26% reduction of LN2 Consumption.

NCSX VACUUM LINER

LINER FAB CONTIN.

CONTOURED LINER COULD BE FORMED BY:

- Pressing
- Explosive forming

SHARE COMMON DISADVANTAGES:

- Require expensive forms or dies, a minimum of 12-16 on a three period machine
  - must be removable from dies
- Job is done twice:
  - make dies
  - form panel skins
- components must still be assembled by welding panels together

NCSX VACUUM LINER

LINER MATERIAL OPTIONS - SS vs Inconel

• Stainless steel

Advantages:

- lower cost (6 - 8 fold)
- easier to machine

Potential issues:

- permeability of welds could be a problem

• Inconel

Advantages:

- stress relieving may be done on carbon steel fixture
- permeability not issue
- higher resistivity

Potential issues:

- CF flg/inconel port interface welds must be limited to 150 C during takeout
  - insulation must be kept well back
  - CF interface may have to have active cooling
- brackets, tile studs, tracing, etc. would have to also be inconel

NCSX VACUUM LINER

ISSUES/CONCERNS

Material/Permeability concerns

- SS - permeability in welds can be high
  - inco rod eliminates permeability but can not bake to 350 C
  - stress relieving too risky

- Inconel - eliminates permeability concerns
  - more costly
  - complicates installation of ports, brackets, PFCs

Operation Temperature

- Determines choice of coolant medium

350 C bake out

- Methodology, medium
- Dimensional stability of liner

Weld distortion

- Bad experience with ATF
- Close control of welding procedures essential
- Resolve during R&D phase

Forming

- Experience lacking, issues not identified
- Resolve during R&D phase

NCSX VACUUM LINER
VACUUM LINER R & D GOALS

IN HOUSE

Develop and prove methodology before going outside for prototypes.

1. FLAT PATTERN DEVELOPMENT
- determine segmentation (number of facets reqd)
- develop software models
- determine trade off between trapazoidal and triangular brake bending

2. CONFIRM MODELS
- fabricate partial scale prototype segments

3. PREPARE PROTOTYPE PROCUREMENT PACKAGE
- determine format best suited to vendor (software, plot points, or full scale templates)

OUTSIDE

Fabricate stainless steel prototype full size liner segments, with coolant lines, and weld into sub-assemblies.

1. DETERMINE ACCURACY
- show liner can be held to $\pm$ 0.5 cm

2. MINIMIZE WELD DISTORTION
- determine distortion resulting from welding
- determine fixturing required

3. PERMEABILITY STUDY
- measure permeability of liner and welds
- viability and necessity of material switch to inconel

NCSX VACUUM LINER

VACUUM LINER

4. BRACKET COSTS
- determine cost of prototyping segments and refine vacuum liner estimate

5. VENDOR EVALUATION
- determine suitability of vendor for sole source liner procurement

NCSX TEMPERATURE PROFILE DURING OPERATION

All dimensions in cm. Temperatures are K.

ASSUME:

Liner maintained at 20 C.

N2 cooling gas inlet temperature 100 K.

Aluminum Bronze Shell

Shell Tb= 100 deltaTl= 193

Liner Tp= 293 deltaTe= 178

GIVEN exterior Te= 278 (to prevent icing)

Rel= (1/Ao)(Li/Ki+Ln/Kn+Ls/Ks)

Re2= (1/Ao)(Li2/Ki)

Li1= liner insul thickness

Li2= outside insul thickness

Ls= 13.2

Liner gap Ln= 0

Ki= 0.0002 W/cmK

Kn= 0.0003 W/cmK

Ks= 0.36 W/cmK

Vsn= 1.142 density Kg/m^3

Cpn= 1040 J/Kg-K

Ao= 1

At= 375000

Li1 microtherm thickness	**Li2** microtherm thickness	**Re1 thermal resistance**	**Re2 thermal resistance**	**Q1** W/cm^2	**Q2**	**Qt** W total	**Ti-n** drop	**Tn-s** drop	**Ts-p** drop	**Ti-n** interface temp	**Tn-s** interface temp	**Ts-p** interface temp	***he** (REQUIRED) w/cm^2-C	**N2** consumption l/min
1.27	15	5732	67265	0.03367	0.00265	14	192	0	1.23	101.23	101.23	100	0.00017642	5.07
2	15	9005	67265	0.02143	0.00265	8	192	0	0.79	100.79	100.79	100	0.00017642	2.99
2.54	15	11427	67265	0.01689	0.00265	6	192	0	0.62	100.62	100.62	100	0.00017642	2.36

* Corresponds to laminar flow

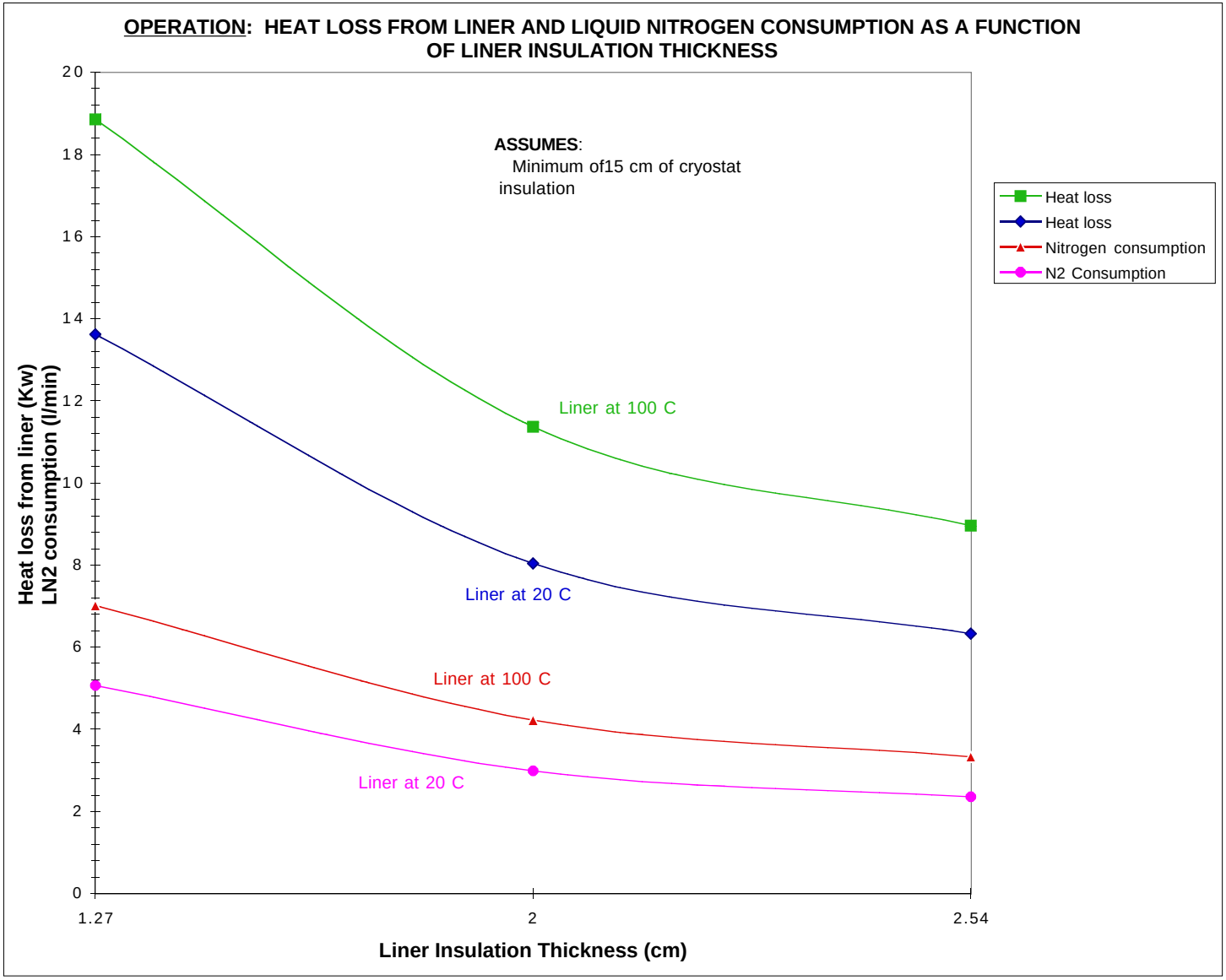
OPERATION: HEAT LOSS FROM LINER AND LIQUID NITROGEN CONSUMPTION AS A FUNCTION OF LINER INSULATION THICKNESS
ASSUMES:
Minimum of15 cm of cryostat insulation
Heat loss
Heat loss
Nitrogen consumption
N2 Consumption
Liner at 100 C
Liner at 20 C
Liner at 100 C
Liner at 20 C
Heat loss from liner (Kw)
LN2 consumption (l/min)
0
2
4
6
8
10
12
14
16
18
20
1.27
2
2.54
Liner Insulation Thickness (cm)

NCSX TEMPERATURE PROFILE DURING OPERATION

All dimensions in cm. Temperatures are K.

ASSUME:

Liner maintained at 100 C.

N2 cooling gas inlet temperature 100 K.

Aluminum Bronze Shell

Shell Tb= 100 deltaTl= 273

Liner Tp= 373 deltaTe= 178

GIVEN exterior Te= 278 (to prevent icing)

Rel= (1/Ao)(Li/Ki+Ln/Kn+Ls/Ks)

Re2= (1/Ao)(Li2/Ki)

Li1= liner insul thickness

Li2= outside insul thickness

Ls= 13.2

Ln= 0

Ki= 0.0002 W/cmK

Kn= 0.0003 W/cmK

Ks= 0.36 W/cmK

Vsn= 1.142 density Kg/m^3

Cpn= 1040 J/Kg-K

Ao= 1

At= 375000

Li1 microtherm thickness	**Li2** microtherm thickness	**Re1 thermal resistance**	**Re2 thermal resistance**	**Q1** W/cm^2	**Q2**	**Qt** Kw total	**Ti-n** drop	**Tn-s** drop	**Ts-p** drop	**Ti-n** interface temp	**Tn-s** interface temp	**Ts-p** interface temp	***he** (REQUIRED) w/cm^2-C	**N2** consumption l/min
1.27	15	5732	67265	0.04763	0.00265	19	271	0	1.75	101.75	101.75	100	0.00017642	7.01
2	15	9005	67265	0.03032	0.00265	11	272	0	1.11	101.11	101.11	100	0.00017642	4.23
2.54	15	11427	67265	0.02389	0.00265	9	272	0	0.88	100.88	100.88	100	0.00017642	3.33

* Corresponds to laminar flow

COIL COOL-DOWN AFTER SHOT 5/5/99

One dimen conduction of heat from copper thru G-10 insul into aluminum bronze.

Lumped mass. H = k/L

Tf=196*EXP(-t/(3600*1.037*L))+77

L insul thickness,

t time, sec

Final temperature of copper after pulse

L(inch)	t(sec)								
	0	60	120	180	240	300	360	420	540
0.02	273.00	164.75	116.29	94.59	84.88	80.53	78.58	77.71	77.14
0.03	273.00	191.71	144.13	116.29	99.99	90.46	84.88	81.61	78.58
0.04	273.00	208.15	164.75	135.72	116.29	103.29	94.59	88.77	82.27

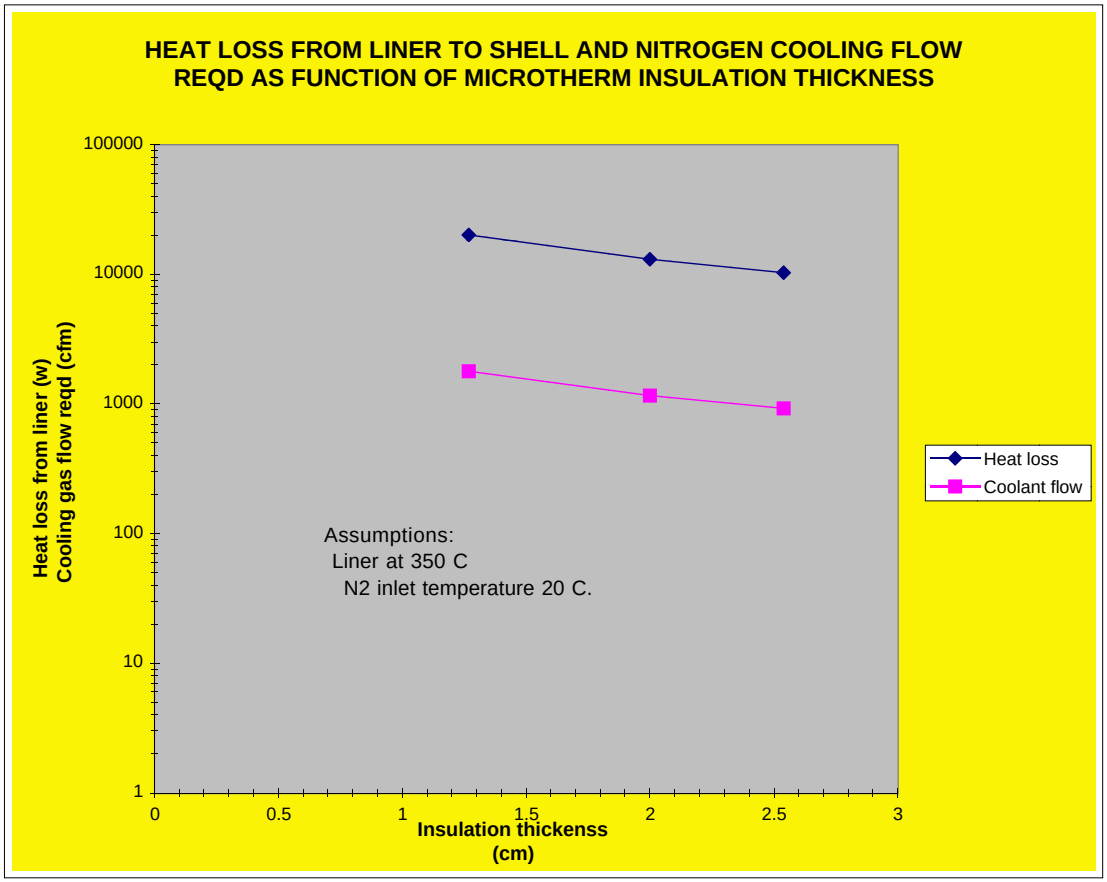
HEAT LOSS FROM LINER TO SHELL AND NITROGEN COOLING FLOW REQD AS FUNCTION OF MICROTHERM INSULATION THICKNESS
Heat loss from liner (w)
Cooling gas flow reqd (cfm)
100000
10000
1000
100
10
1
0
0.5
1
1.5
2
2.5
3
Insulation thickenss (cm)
Assumptions:
Liner at 350 C
N2 inlet temperature 20 C.
Heat loss
Coolant flow

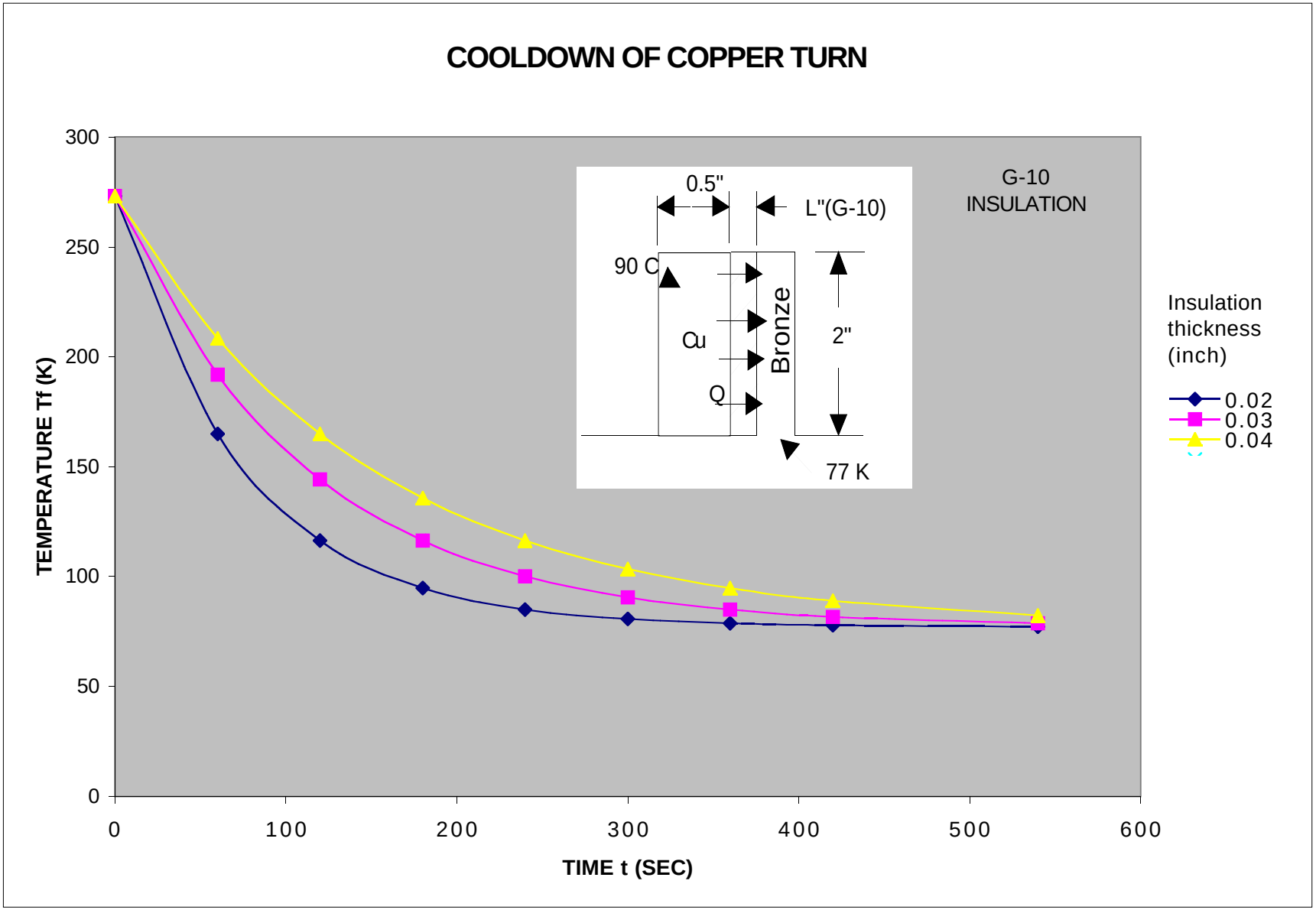
COOLDOWN OF COPPER TURN
TEMPERATURE Tf (K)
300
250
200
150
100
50
0
0
100
200
300
400
500
600
TIME t (SEC)
0.5"
L"(G-10)
90 C
Cu
Q
Bronze
2"
77 K
G-10
INSULATION
Insulation
thickness
(inch)
0.02
0.03
0.04

BAKE OUT 5/3/99

Heat Load 20 Kw

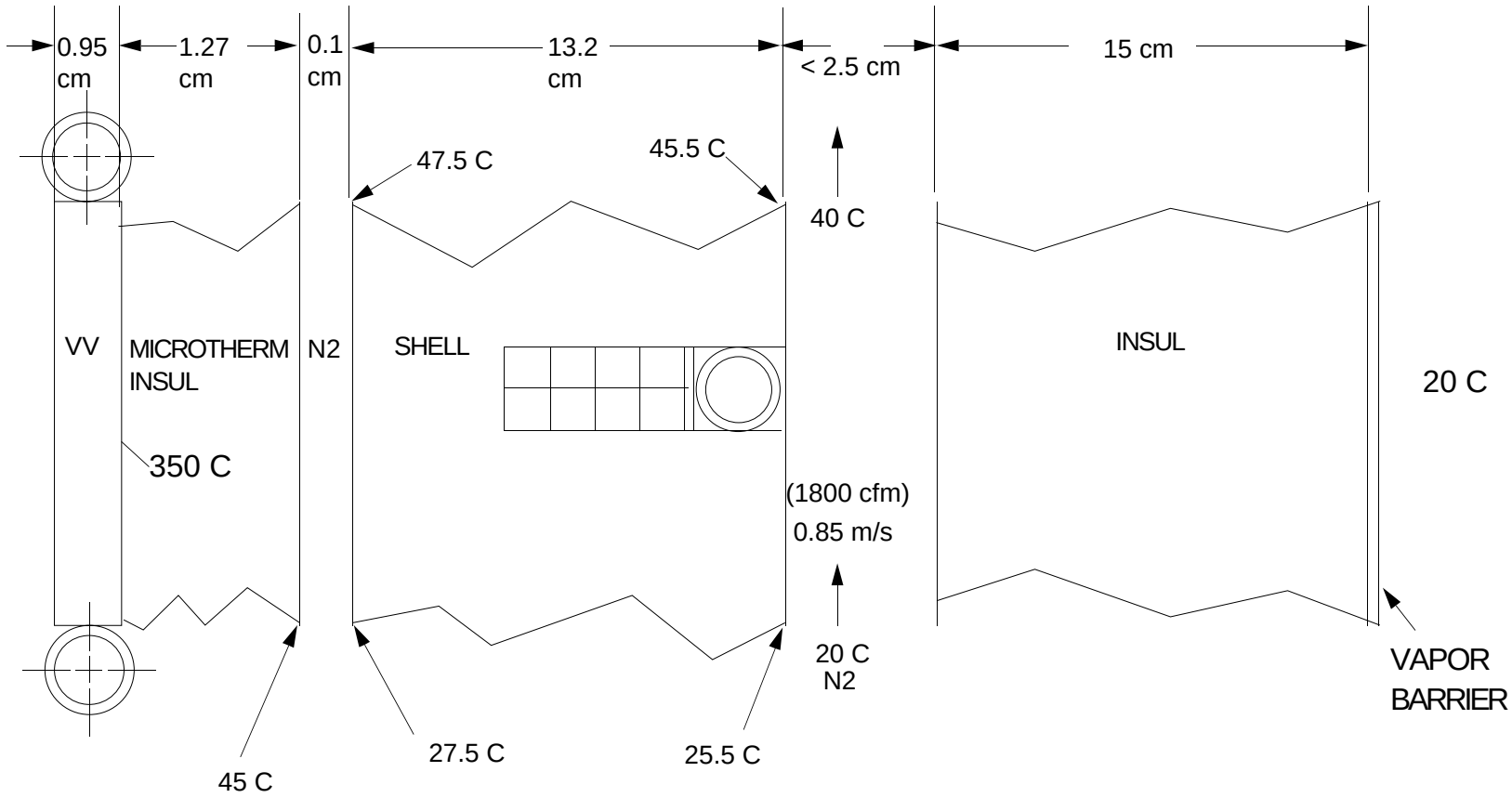

NCSX TEMPERATURE PROFILE DURING BAKE OUT - Case 2. Liner fully expanded, gap between shell and insulation almost closed.

All dimensions in cm. Temperatures are C.

Bakeout 350 deltaT= 325

ASSUME: Cooling gas Tp= 20

350 C BAKE OUT

N2 cooling gas inlet temperature 20 C

First cut guess at microtherm outer temp = 88 C.

Aluminum Bronze Shell

Re= (1/Ao)(Li/Ki+Ln/Kn+Ls/Ks)

Li= insulation thickness

Ln= 0.1

Ls= 13.2 Ao= 1 Vsn= 1.142

At= 375000 Cpn= 1040

Q= deltaT/Re

Ki= 0.000223 W/cmK d=2.5

Kn= 0.000294 W/cmK vk=1.563e-5 Kinematic visc.

Ks= 0.36 W/cmK Ac=0.586 m^2 Passage area

Pr=.713 Prandtl no.
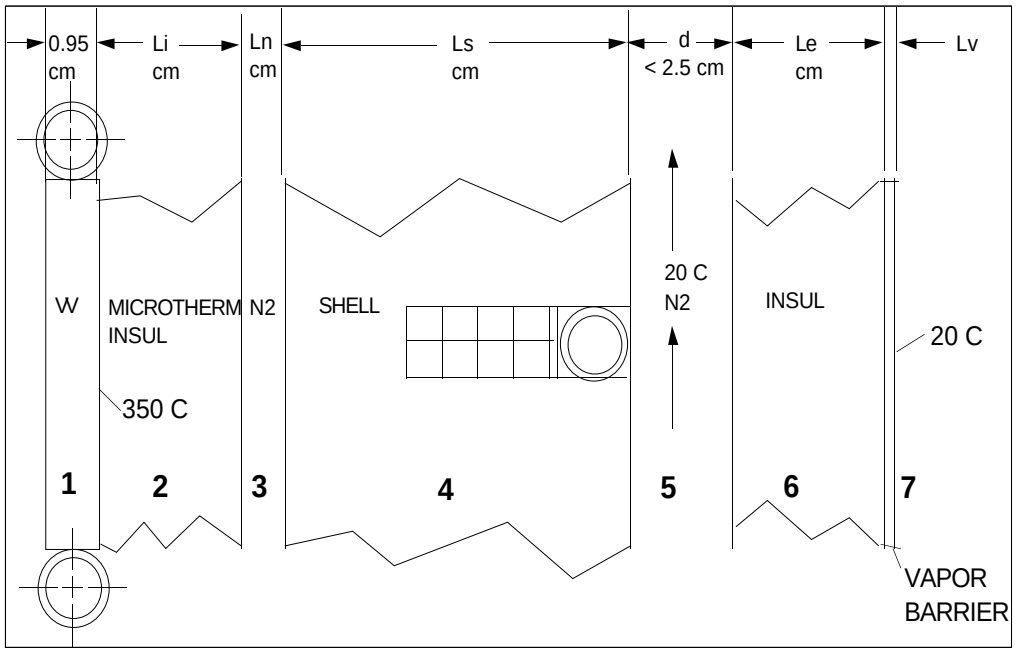
Li microtherm thickness	**Re** **thermal resistance**	**Q** W/cm^2	**Qt** W total	**Ti-n** drop	**Tn-s** drop	**Ts-p** drop	**Ti-n** interface temp	**Tn-s** interface temp	**Ts-p** interface temp	**N2** temp rise (GIVEN)	**N2** flow m^3/s	**N2** flow CFM	Re	hc film coef w/cm^2K	Tsf across film K
2.54	11767	0.02762	10357	315	9	1.01	35	26.01	25	20	0.44	924	2380	0.0058	4.80
2	9345	0.03478	13041	312	12	1.28	38	26.28	25	20	0.55	1163	2997	0.0069	5.03
1.27	6072	0.05353	20072	305	18	1.96	45	26.96	25	20	0.85	1790	4613	0.0098	5.48