NCSX

WBS 1 Torus systems
R&D plan details

Mike Cole, Paul Goranson, Brad Nelson, Dave Williamson

NCSX Project Meeting
PPPL
March 31, 1999

R&D for WBS 1

- R&D is needed to resolve feasibility issues and optimize fabrication processes for

- Saddle coil windings and structure

  - Behavior of braided conductor in rigid slot during thermal and magnetic cycling,
  - Insulating, winding and potting of conductor
  - Machining of grooves in shell structure, automation of CAD/CAM process
  - Assembly of shell structure around vacuum vessel
  - Welding of cooling tube or closure plate in groove

- Vacuum vessel

  - Checkout of software to create flat development patterns for vessel
  - Break-forming and welding of vessel sections within geometric tolerance and magnetic permeability requirements

R&D for WBS 1

- Early R&D has greatest pay-off for design improvements and cost savings
- Plan is based on three phases of work for each subsystem
  - Simple, in-house tests for specific issues (e.g. simple conductor stiffness test)
  - Integrated prototype fabrication and tests by vendor (full scale winding)
  - Follow-on production of final set of components by same vendor, if possible

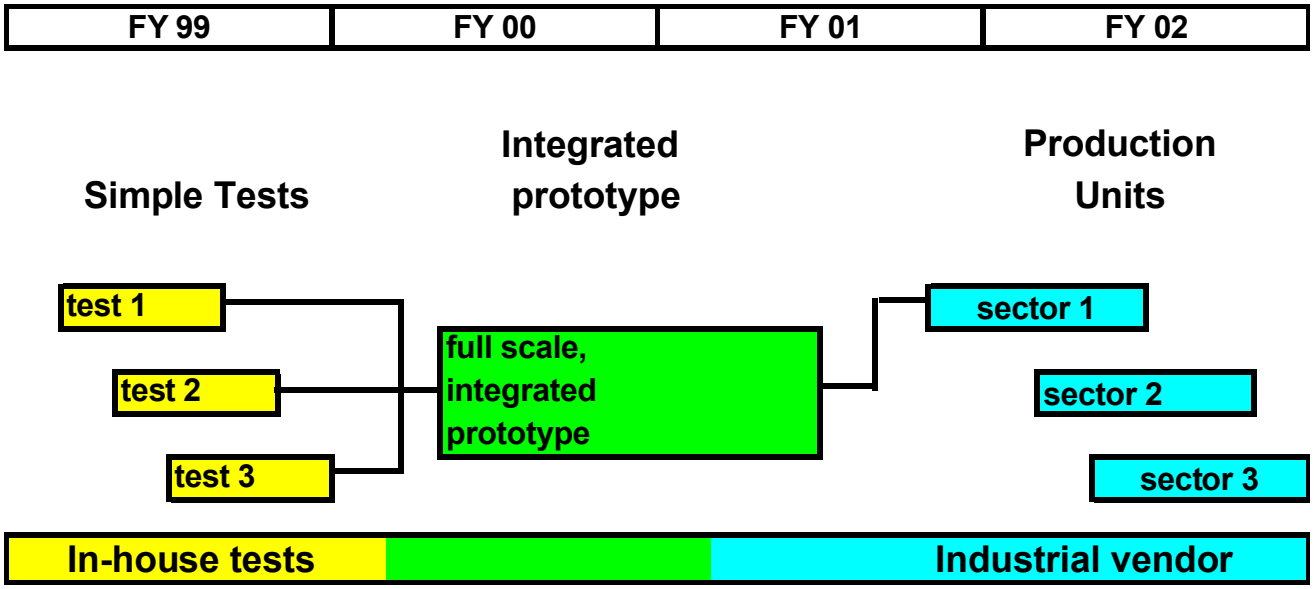

R&D Plan for Saddle Coil Windings

- In-house, simple tests make use of existing High Temperature SC test facility

1. Behavior of braided conductor in rigid slot during thermal and magnetic cycling

   What is effective stiffness of conductor?
   How long does it take to cool down between shots?
   How well does insulation system hold up to thermal cycles?

2. Insulating, winding and potting of conductor in simple coil shape

   How difficult is it to wind conductor into narrow slot?
   Can epoxy be excluded from cable during potting?
   Are crossovers and joggles a problem?

3. Welding of cooling tube or other closure in groove

- Integrated test will integrate prototype coil winding with prototype shell segment

R&D Plan for Saddle Coil Windings, Phase 1 Cable Test

Goal

Establish stress-strain behavior of cable in rigid slot

Method

Build test fixture to accommodate cable for compression tests

Cost

Preliminary estimate is $36k

Schedule

10 weeks from start

Cable Test Fixture

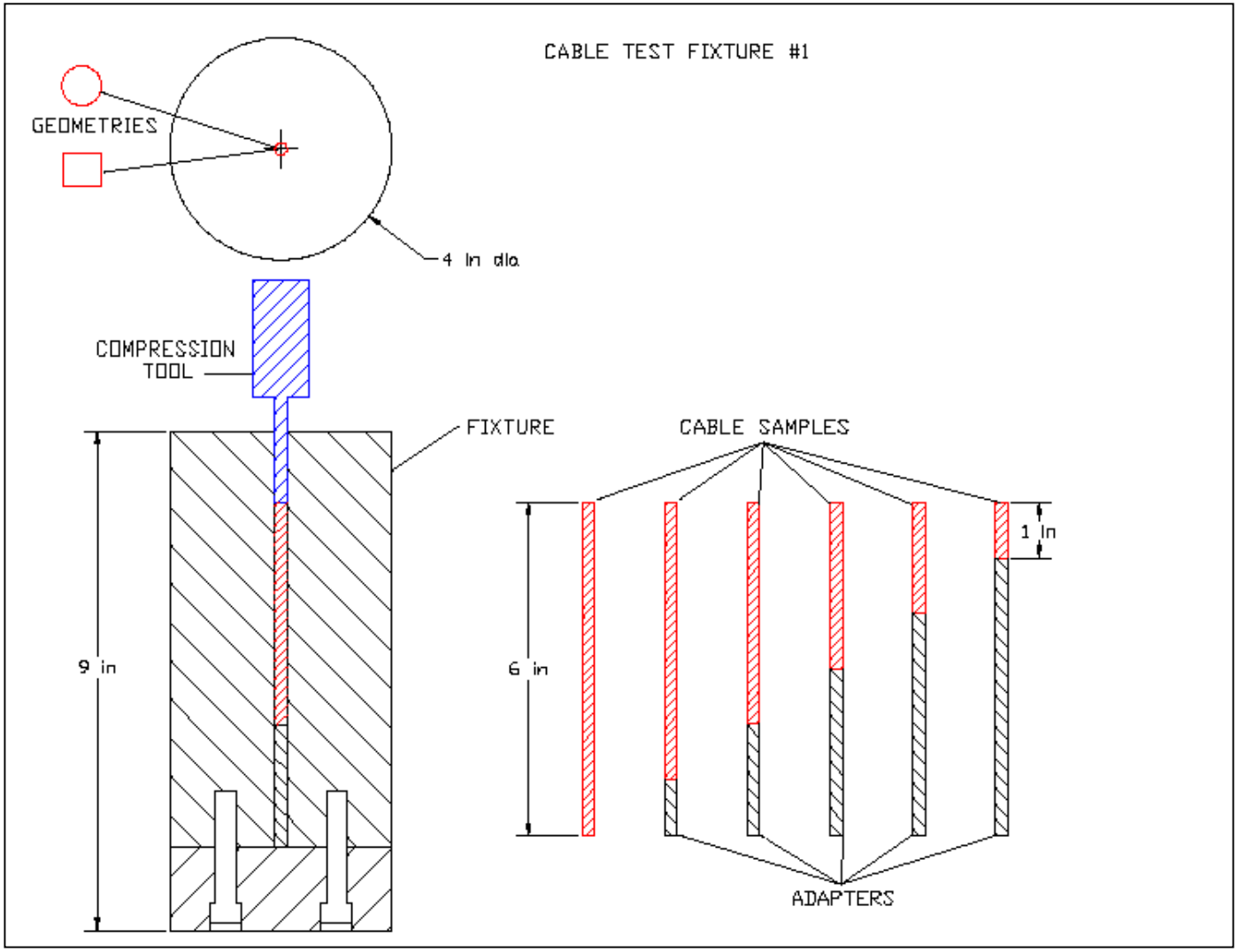

R&D Plan for Saddle Coil Windings, Phase 1 Coil Test

Goal

Investigate winding of cable in narrow slot,
Determine behavior of coil winding during thermal cycles
Determine cooldown of cable between cycles

Method

Build small racetrack coil
Use existing facility to operate coil at temperature and current

Cost

Preliminary estimate is ~$130k

Schedule

13 weeks after receipt of cable and other material

Phase 1 Coil Test

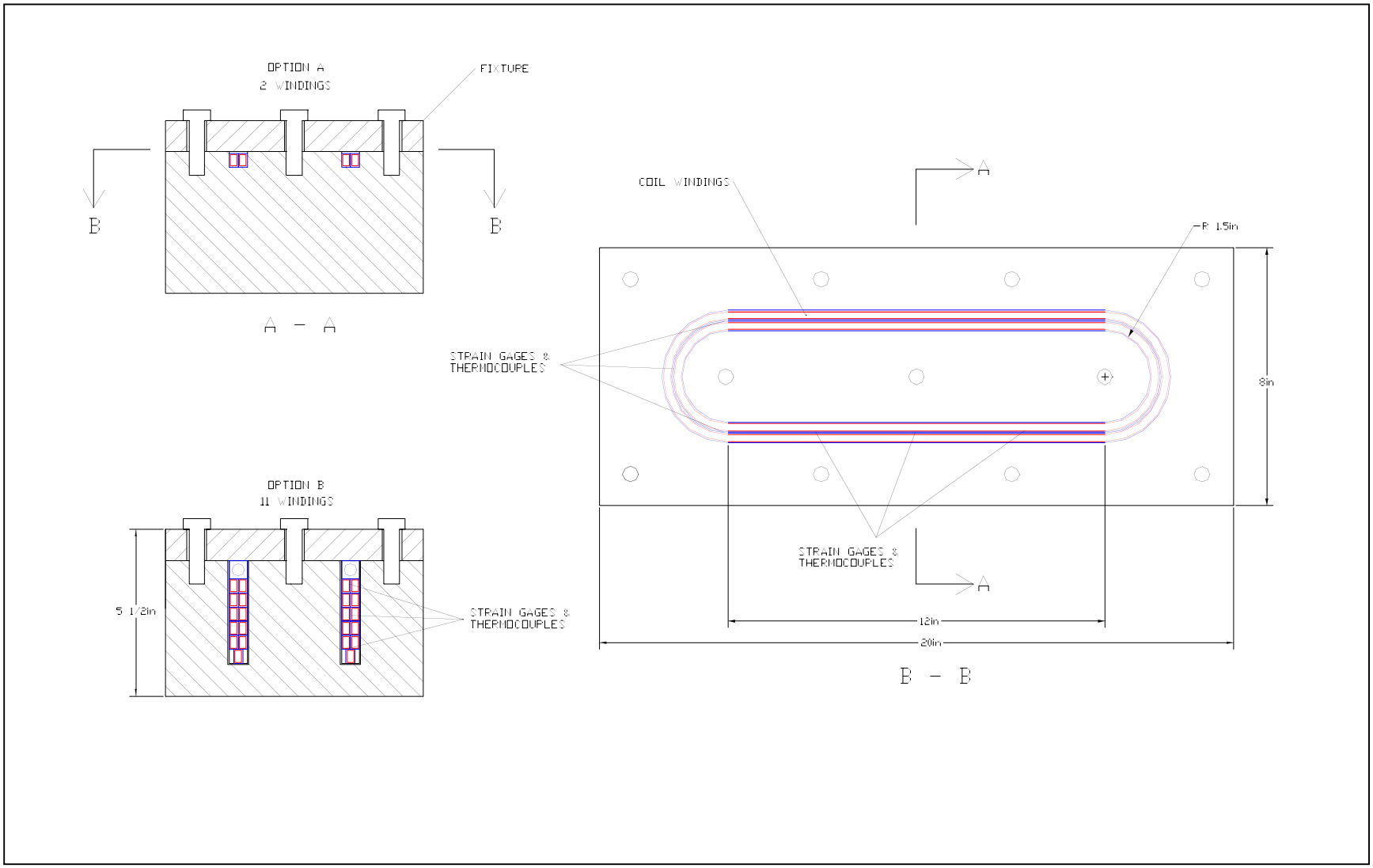

R&D Plan for Saddle Coil Structure

- Specific R&D will depend on shell concept

- Generic R&D includes

  - Fabricate subscale parts using rapid prototyping (eg stereolithography)
  - Demonstrate method to transmit winding groove geometry from Pro-E CAD model to CNC machining system by fabrication of sub-scale part

  - Demonstration of groove geometry measurement

- Full scale prototype will be machined for use in prototype winding integration test

R&D Plan for Vacuum Vessel

- Primary issue is accurate fabrication of vessel using break-forming technique

- Simple tests in-house (or with vendor) include:

  Develop software to create flat patterns
  Break bend sub-scale parts to verify software that creates flat patterns

- Full scale tests with vendor include:

  Break bend 2 full scale parts
  Weld 2 parts together

- Prototype tests with vendor may include, if needed:

  Break bend parts for partial full scale sector (1/6 of total)
  Weld parts together
  Verify measurement technique

R&D Budget, Summary

task ID	Description	Start	End	subtotal	contingency %	contingency $k	total $k			
									FY99	
									FY00	
									FY99 and FY00	
	Winding R&D									
1.1	Cable stiffness	Apr-99	1-Jul-99	29.2	25%	7.3	36.5	299.5	staged test, includes square later	90.4
1.2	winding pack fab	Apr-99	1-Jun-99	30.3	50%	15.2	45.5			
1.3	thermal/mechanical tests	Jun-99	1-Dec-99	56.6	50%	28.3	84.9		insulation, cooldown, heatup, etc.	
1.4	winding prototype coil	Jun-00	Jun-01	88.4	50%	44.2	132.6		wound into 2.4 assembly	
	Shell R&D									
2.1	CAD machining	Apr-99	1-May-99	22.2	50%	11.1	33.3	251.7	as part of task 1.2	0.0
2.2	Machining single winding cavity			34	50%	17.0	51.0		contour machining	
2.3a	Welding cooling tube/ closure	Apr-99	1-Oct-99	18	50%	9.0	27.0		phase 1	
2.3b	strength test of closure	Oct-99	1-Nov-99	13.6	50%	6.8	20.4			
2.4	full scale prototype	Oct-99	Jun-00	80	50%	40.0	120.0		3 partial pieces bolted together	
	Vacuum Vessel R&D									
3.1	flat dev software w/fab test	Apr-99	Jun-99	20.2	50%	10.1	30.3	222.2		30.3
3.2	1/4 scale, partial model	Oct-99	Oct-00	34.4	50%	17.2	51.6			
3.3	full scale, partial mockup	Jun-00	Jun-01	93.5	50%	46.8	140.3			
	Measurement R&D			306						
	Geometry									
	Magnetic field									
	General R&D									
4.1	stereolithography models	Apr-99	Jun-01	22.6	10%	2.3	24.9	32.4		5.0
4.2	tools, eg Severin gage	Apr-99	Jun-01	5	50%	2.5	7.5			
	Total						798.2			125.7