WBS 14 - Helical Coils and Structure

David Williamson

NCSX Project Meeting
May 5-6, 1999
ORNL

Outline:

- Design Basis / Requirements
- Proposed Concept
- Performance Evaluation
- Cost Update
- Issues / R&D Plans

Design Basis / Requirements

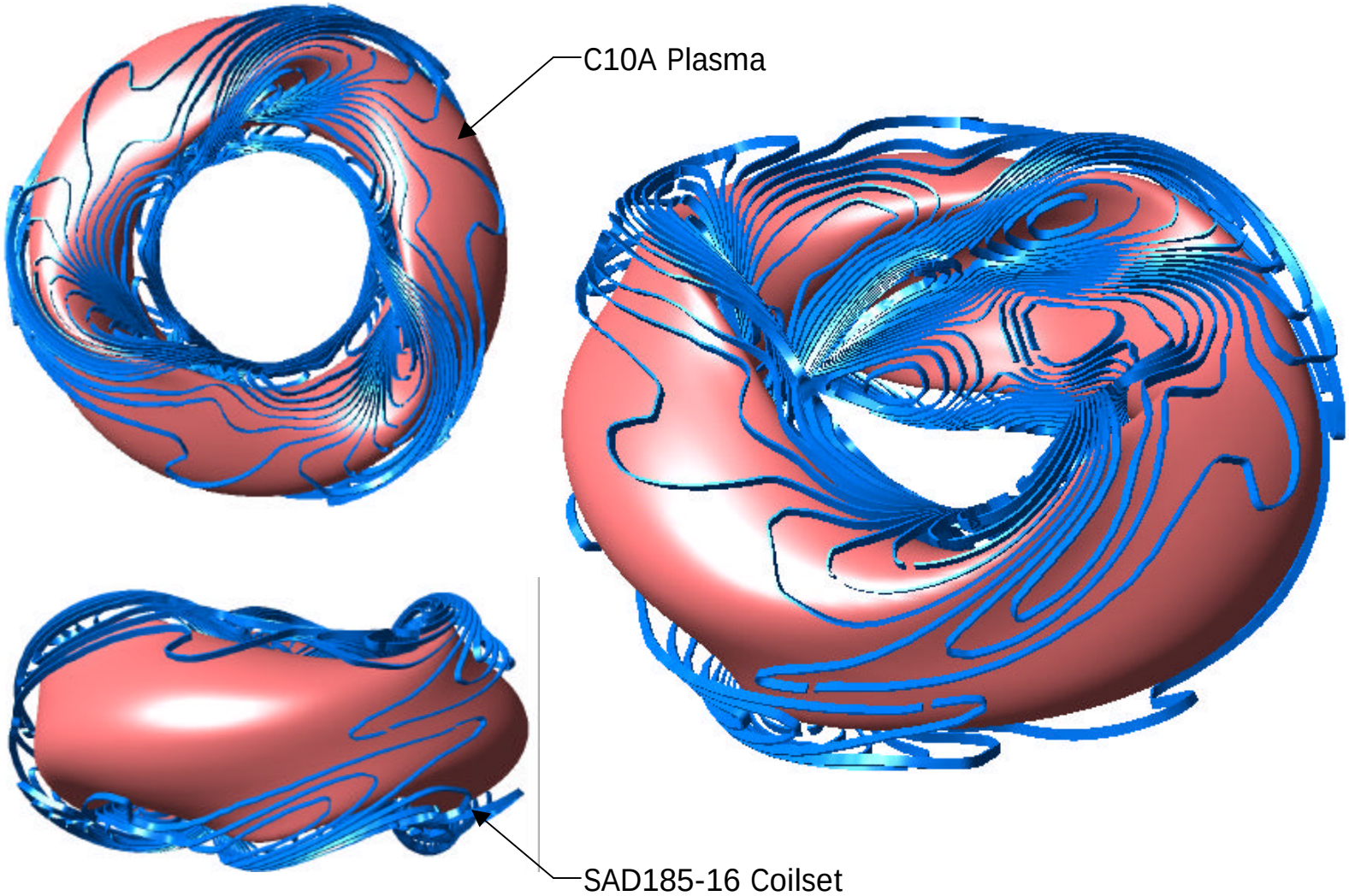

Design Basis / Requirements

Helical Coils

Parameters:

Plasma Configuration	C10 - 2T
Coil Configuration	SAD185-16
# Coils / Half Period	13
Dist from Plasma to Coil	18-cm
Current / Coil	84-kA
Min Coil C/L Spacing	23-mm
Nominal Coil Dimensions	18 x 70-mm
# Turns / Coil	10
Min Coil Bend Radius	8-mm
Shortest Coil Length (1-turn)	0.4-m
Longest Coil Length (1-turn)	16.7-m
Total Length of Conductor	4080-m
Total Weight of 78 Coils	6000-lb

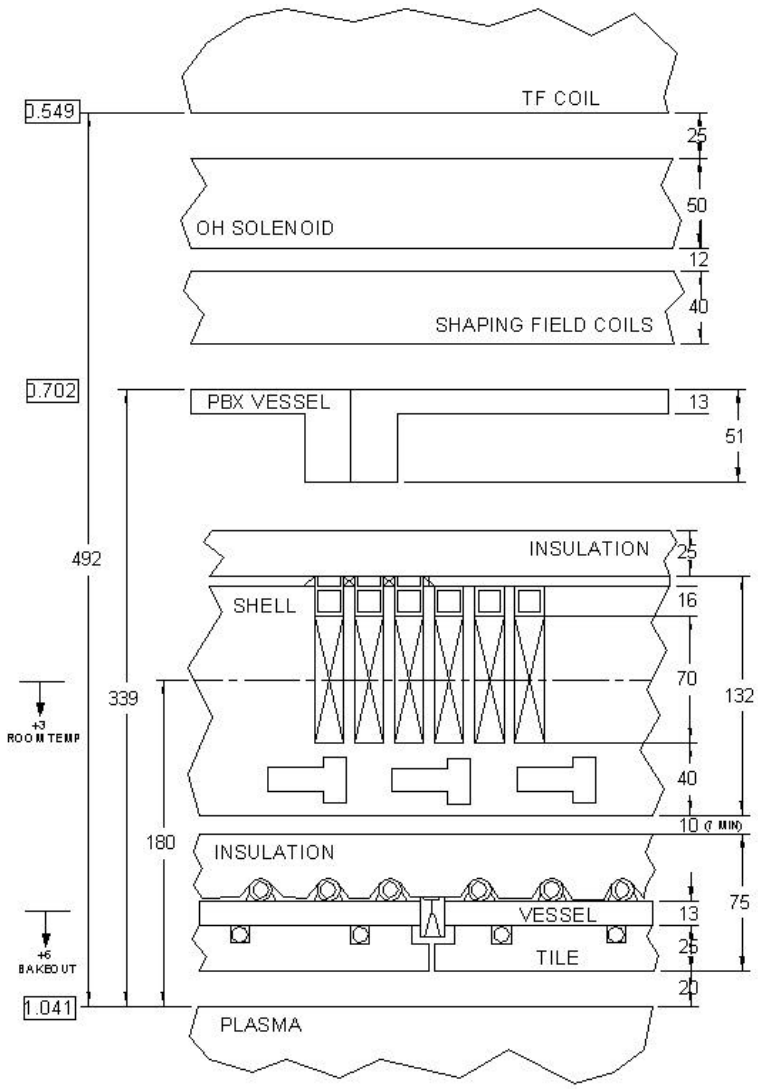

INBOARD SECTION AT OP. TEMP

Design Basis / Requirements

Support Structure

Geometry:

- Inner surface conforms to vessel (R=1.5-m, a=0.45-m)

- Outer surface provides accurate slots for coil winding
  (Coil centroid position within 1.5-mm, 0.060-in)

- Outer structure fits within PBX-M TF Coils

Temperature:

- Operating temperature = 80 - 350K (up to 80C at bake-out)

Electrical:

- Eddy current time constant < 10-ms (segmentation TBD)

Strength:

- Withstand local EM pressures up to 3-ksi

Weight:

- Entire stellarator core < 50,000 lb

Proposed Concept

- Plasma-Shaped Vacuum Vessel
- Inner Structural Shell ("apple core")
- Outer Structural Shell
- Saddle Coils Wound on Outside of Shell
- Fiberglass cryostat

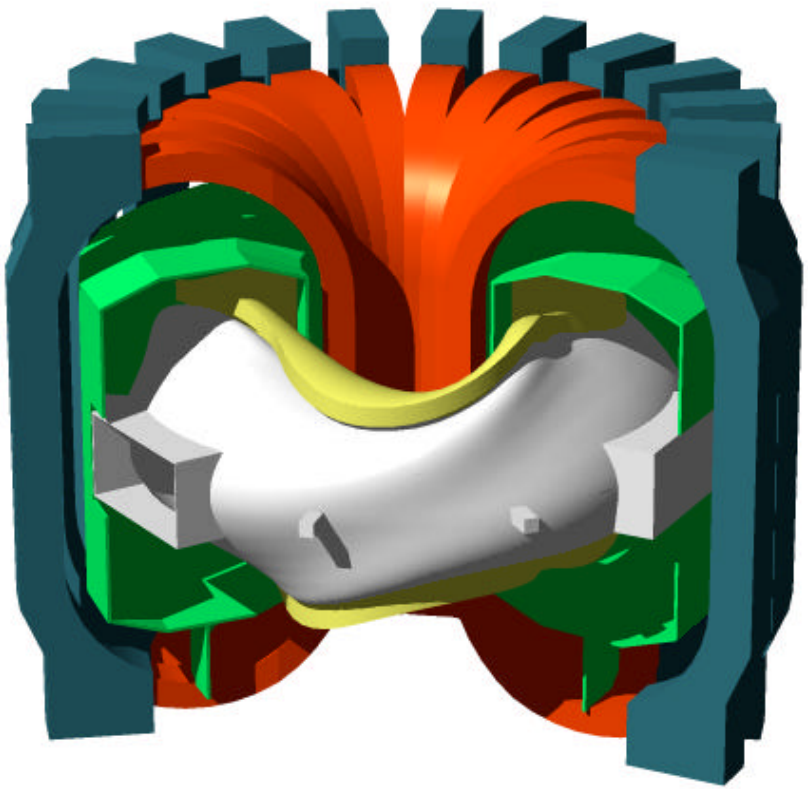

Stellarator Core Component	Weight (ton)
PFCs	1.4
Vacuum Vessel	3.0
Supporting Structure	38.1
Helical Coils	3.0
Cryostat	3.2
Total	48.7

Proposed Concept

General Arrangement

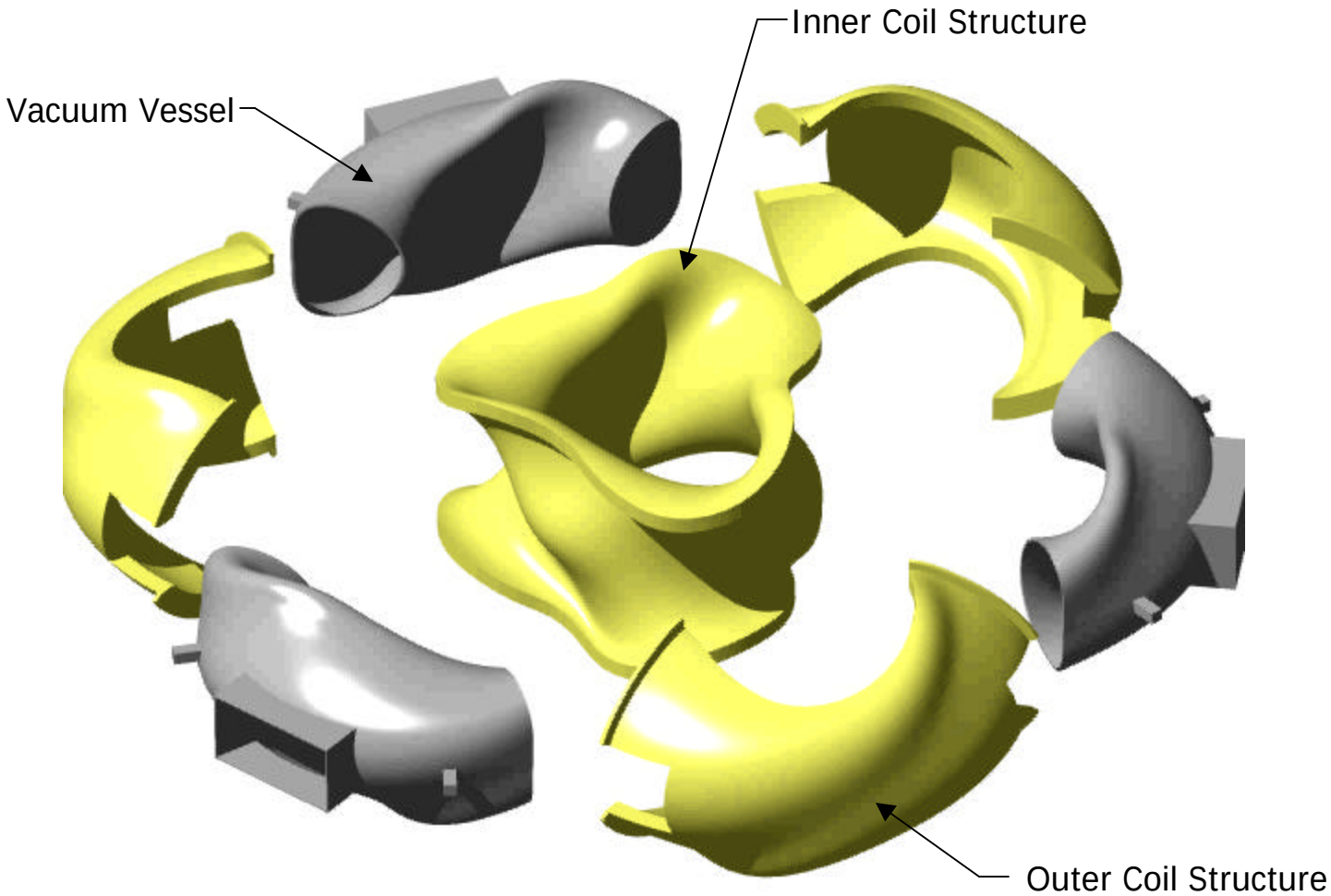

Proposed Concept

Design Features

Element	Options	Preference
Material (Shell)	• Stainless Steel • Aluminum • Bronze	Nickel Aluminum Bronze (NAB)
Poloidal Segmentation	• Mid-plane • Top/Bottom	Top/Bottom
Toroidal Segmentation	• 24 (Wedges) • 120 (Plates/Wedges)	24 Wedge Segments
Assembly	• Bolting	Bolting
Coil Construction & Leads	• Flexible Sq Conductor	Flexible Sq Conductor
Slot Closure	• Welded Cover Plate • Cooling Line Plug • Compacted Fill/Epoxy	Cooling Line Plug
Cooling/ Insulation	• LN Cooling • PBX Vessel / Cryostat	LN Cooling Line + Fiberglass Enclosure

Proposed Concept

Material Selection

Nickel-Aluminum-Bronze, UNS C95800, has good strength and thermal conductivity, a CTE like copper, high electrical resistivity, and good casting/machining properties

Magnetic permeability of shop samples was uniform in as-cast, cold-rolled, and welded condition, although somewhat higher than handbook values

Material	UTS, MPa	YS, Mpa	CTE, um/mK	K, W/mK	rho, nohm-m	Mag perm	Machining Parameters
Aluminum	124	55	24	180	37	---	0.625 ", 15 "/min
Copper	338	217	17	386	17	---	---
Glass-Filled Epoxy	67	60	33	0.74	---	---	---
Nickel-Al-Bronze	585	240	16	36	243	1.05	0.500 ", 10 "/min
Stainless Steel	517	213	17	14	720	1.02	0.250 ", 5 "/min

Proposed Concept

Toroidal Segmentation

- Segmentation changed from 40 to 8 segments per period
- Higher number of segments dramatically increases:
    - Number of casting patterns
    - Machining set-ups and cost
    - Number and accuracy of assembly fixtures

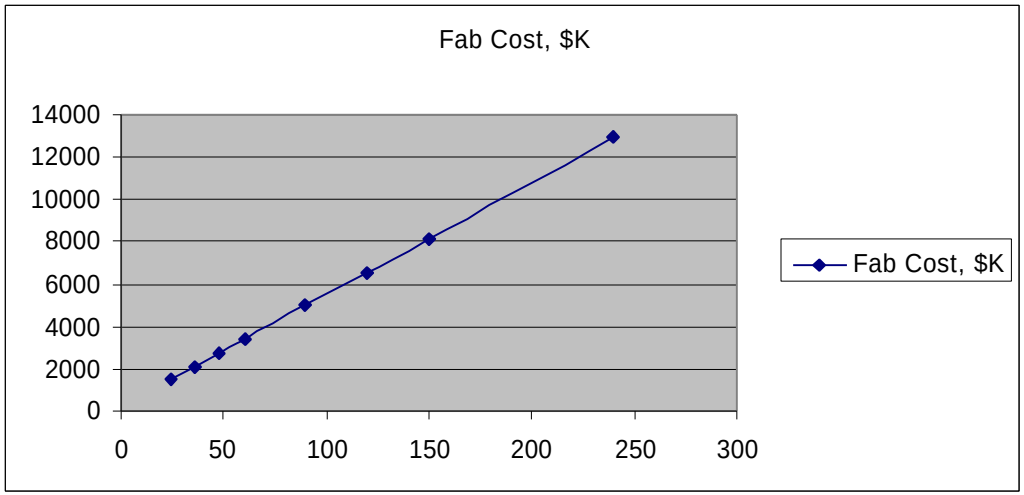

Toroidal Segmentation (3/30 Mtg)

120 Wedge Segments

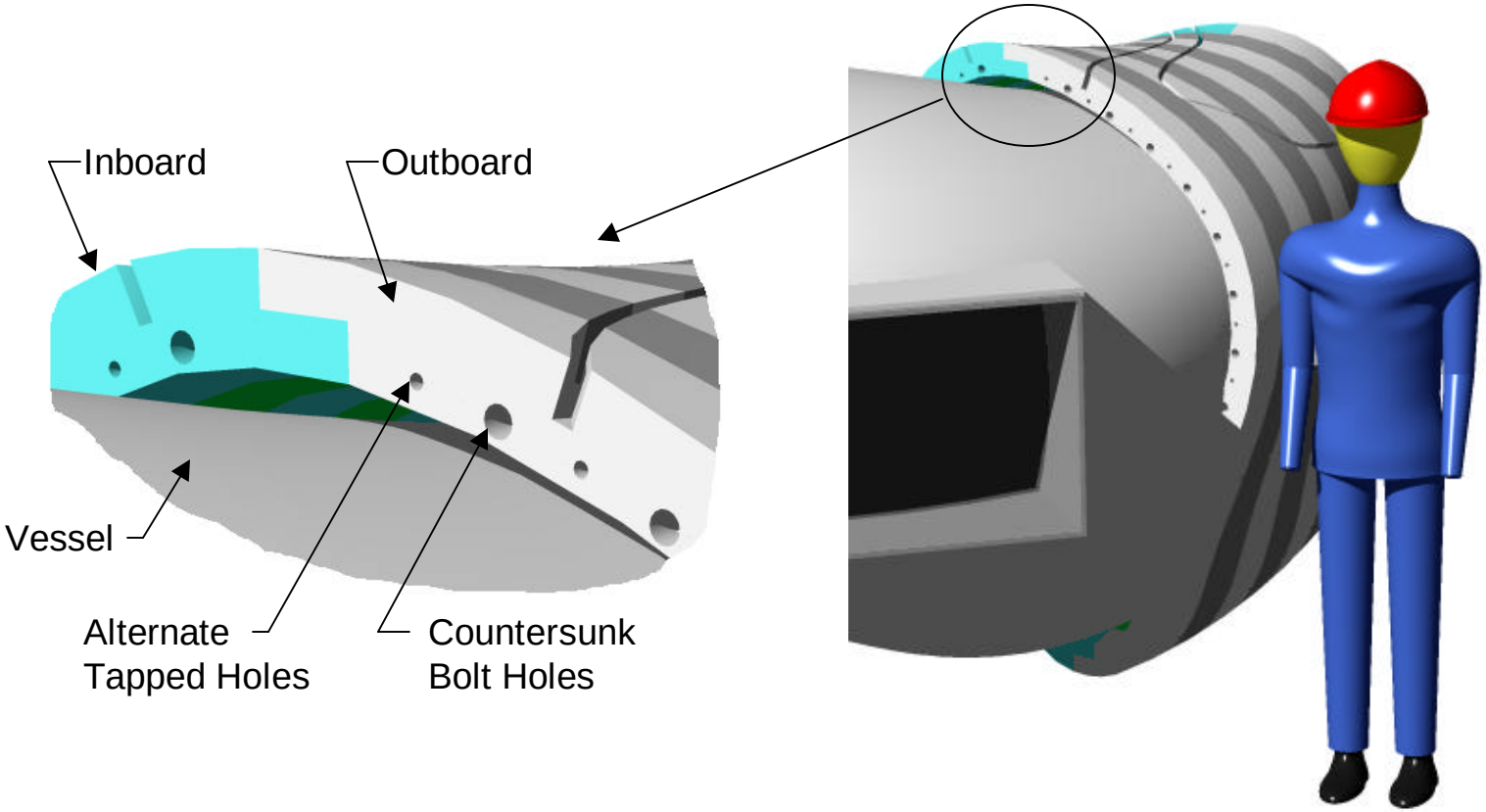

Toroidal Segmentation (3/30 Mtg)

120 Wedge Segments

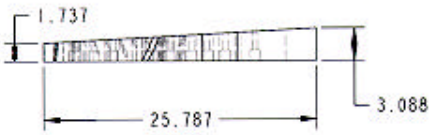

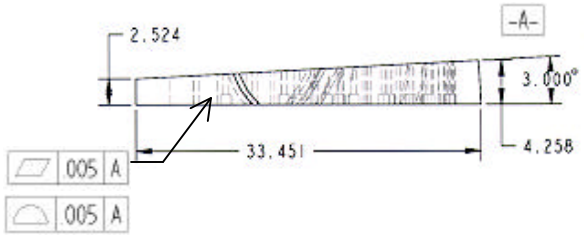

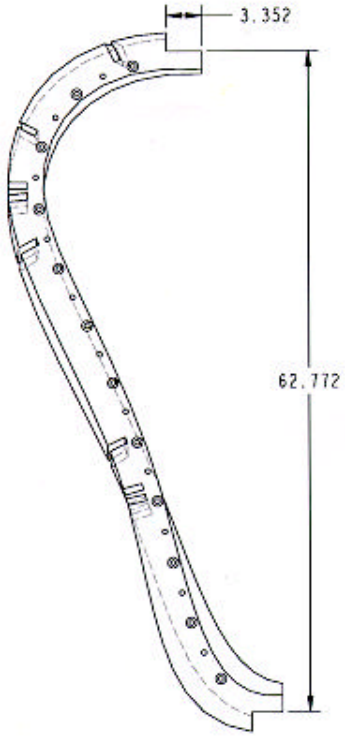

Inboard

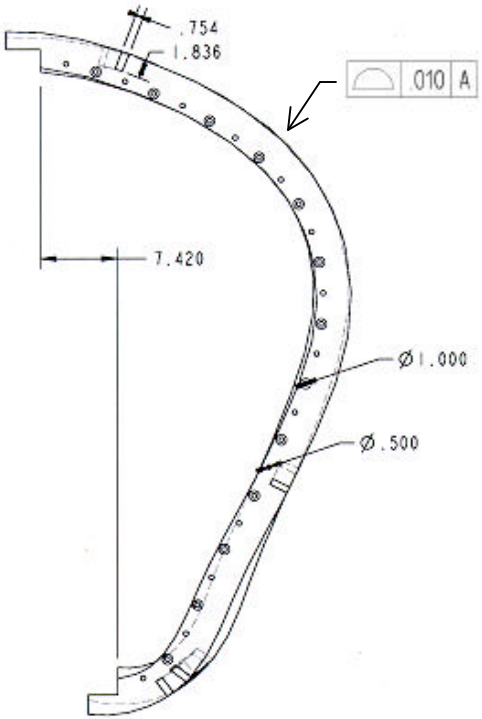

Outboard

Proposed Concept

24 Wedge Segments

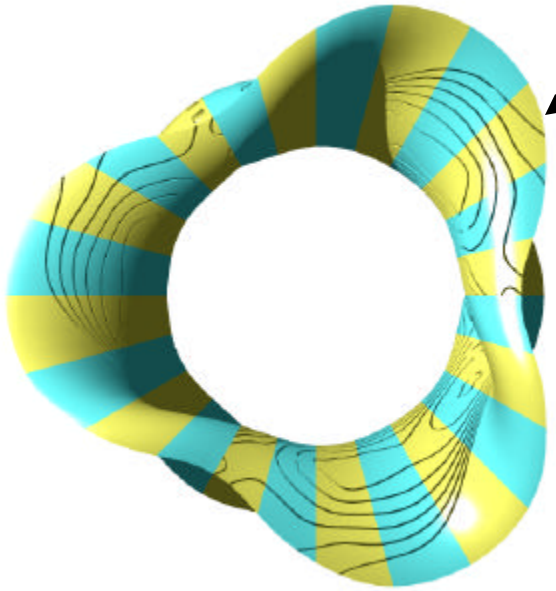

Inboard Structure

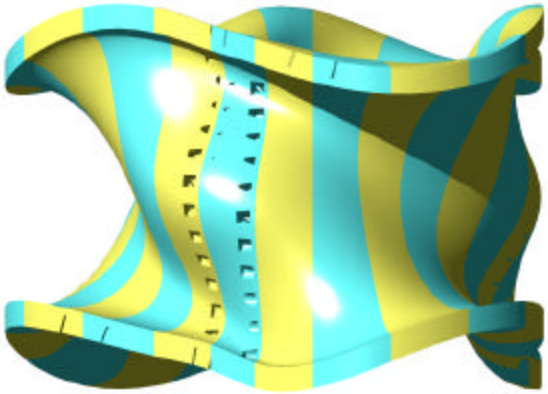

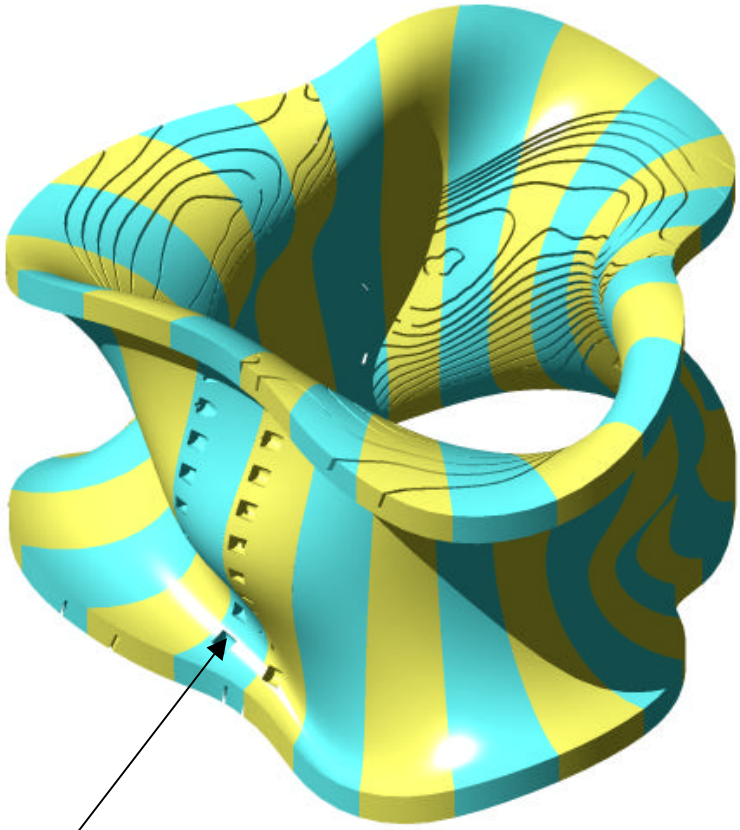

Wedge Attachment
(1-in dia bolts, 3-in spacing)

Proposed Concept

24 Wedge Segments

HELICAL COIL SUPPORT
INNER WEDGE SEG-A (TYP 6)
MATL = UNS C95800 NAB
AS-CAST WEIGHT = 1084-LB

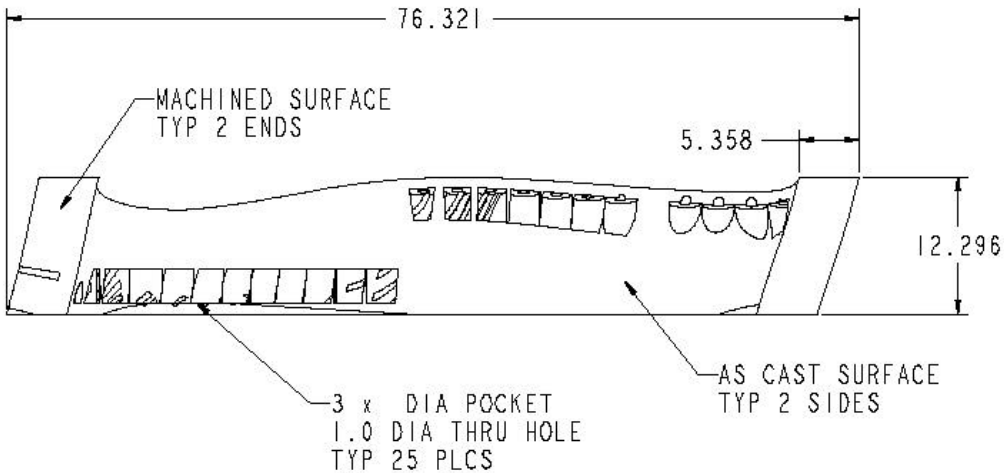

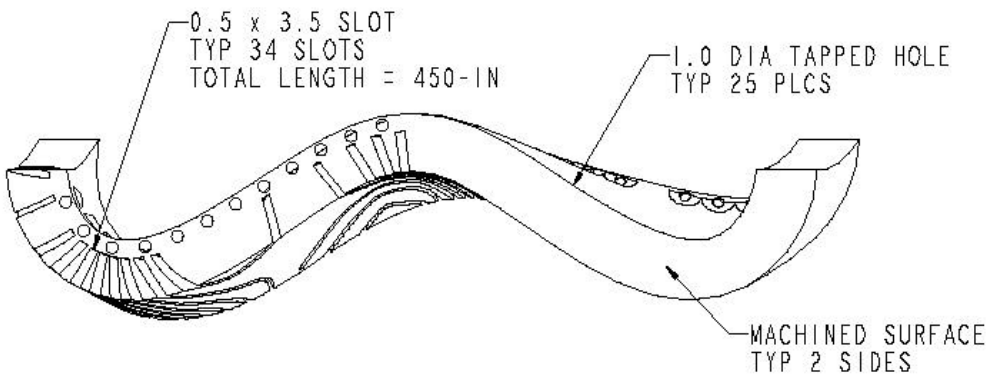

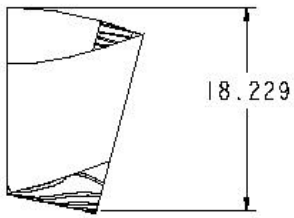

Proposed Concept

24 Wedge Segments

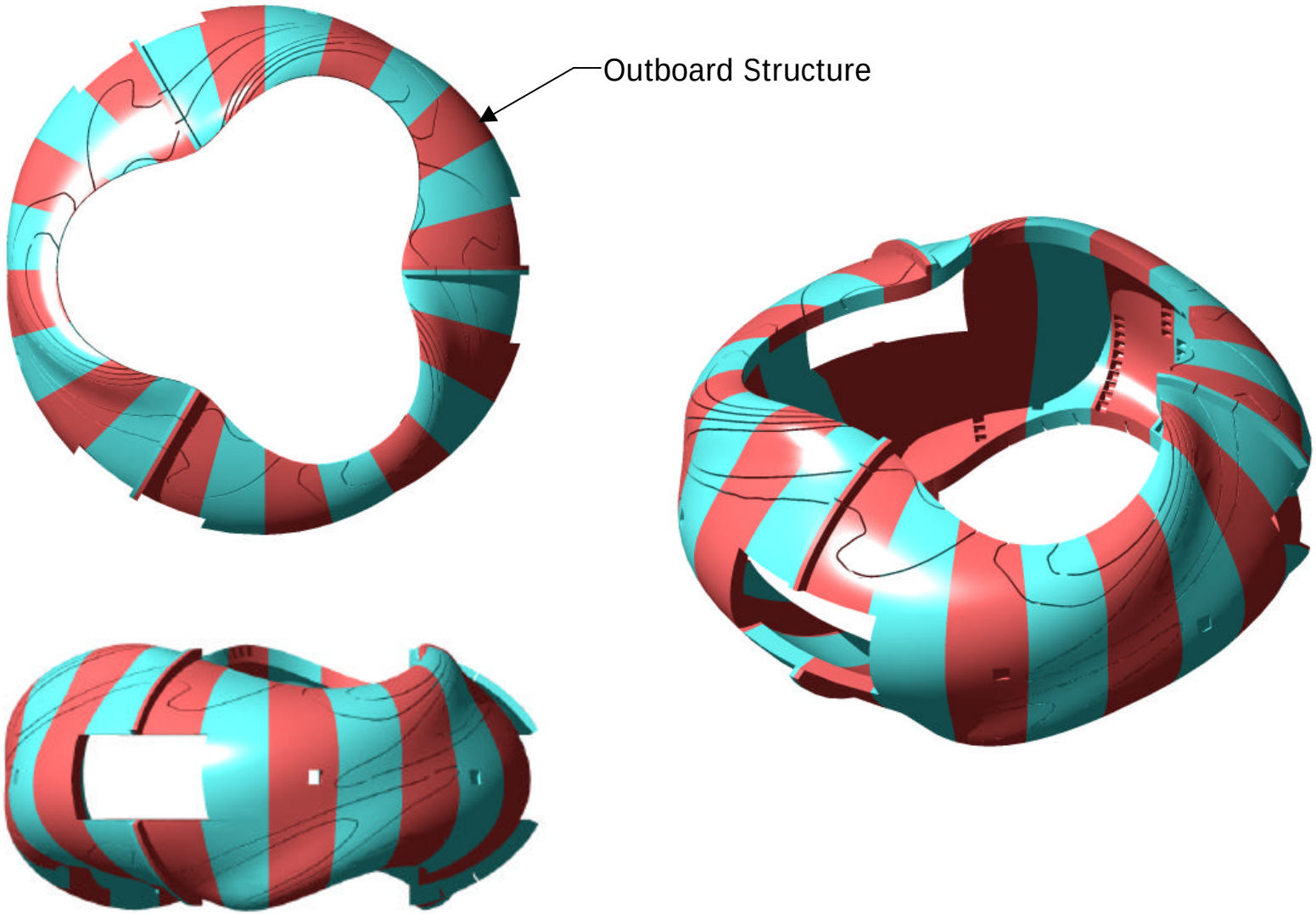

Proposed Concept

24 Wedge Segments

Toroidal Segmentation Option #2

24 Wedge Segments

HELICAL COIL SUPPORT
OUTER WEDGE SEG-C (TYP 6)
MATL = UNS C95800 NAB
AS-CAST WEIGHT = 2136-LB

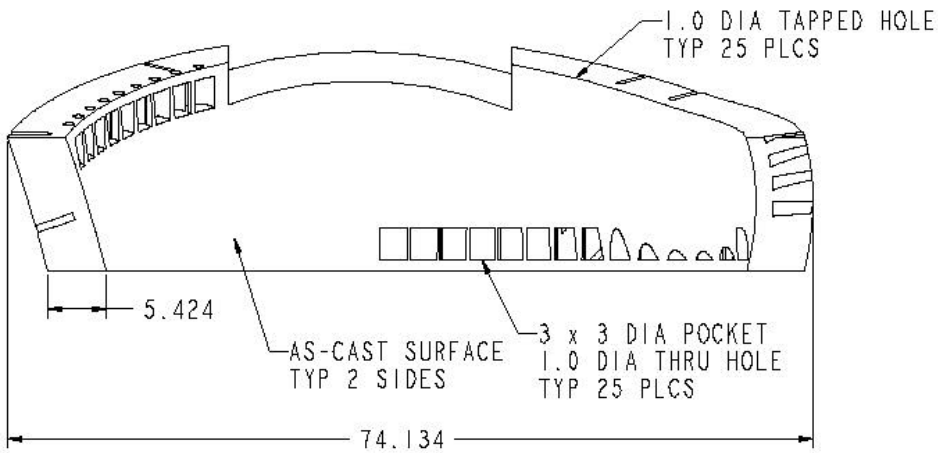

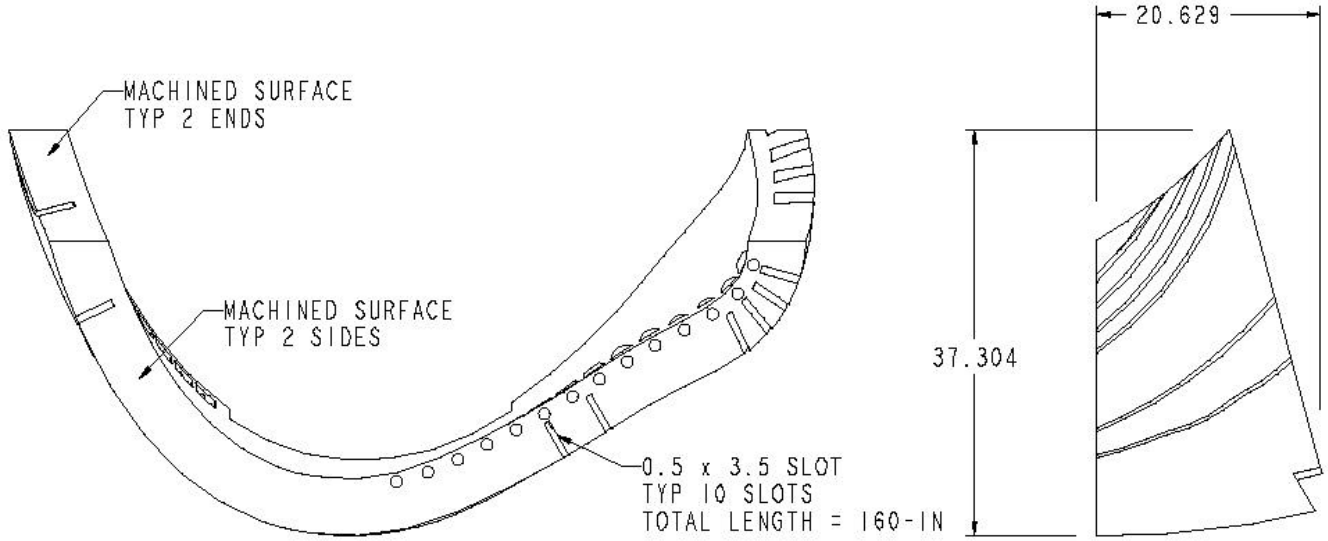

Proposed Concept

Assembly

Inboard/outboard wedges attached by pocketed bolts
- Pockets formed in casting
- Machined through hole and back spot-face
- Left/right pockets give fewer patterns
- Feasible for up to 1-in dia bolt with 3-in spacing

Inner/outer subassemblies attached by pins at top and bottom
- Shop recommends flat and perpendicular surfaces on wedge ends for alignment

Outboard subassemblies attached by bolted flanges
- Three port locations have the fewest coil crossings

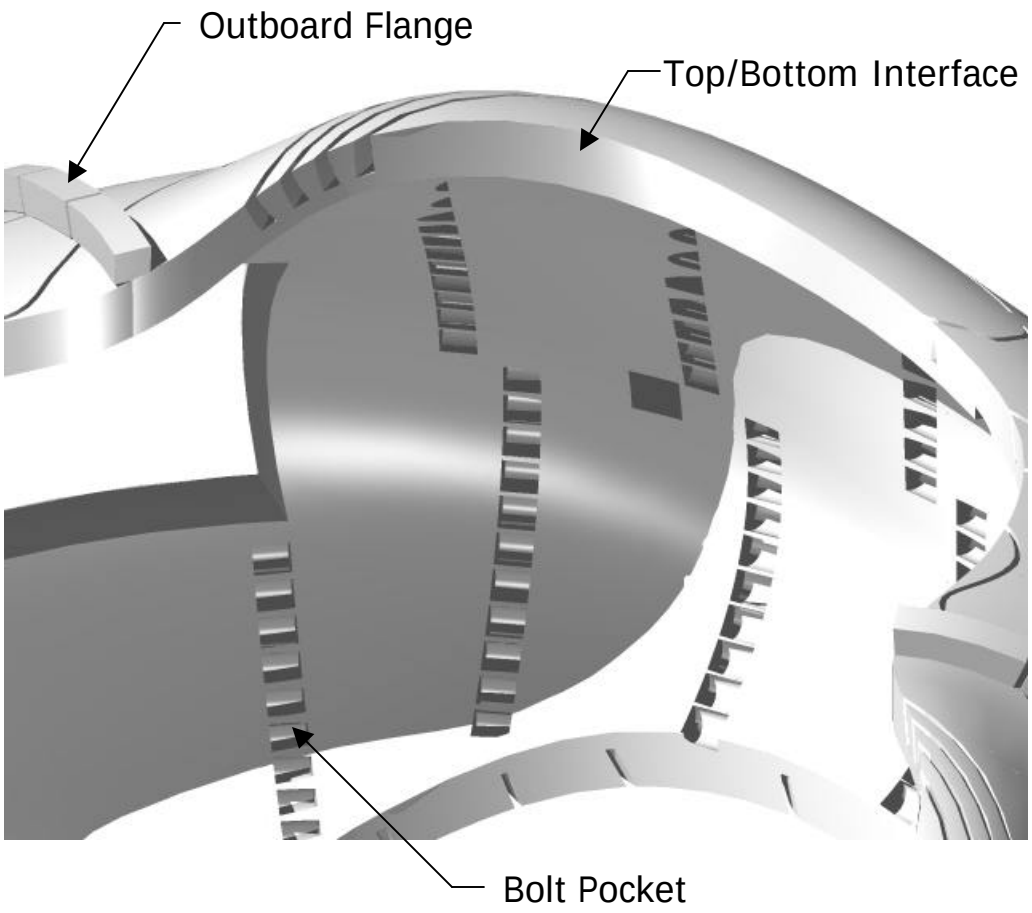

Proposed Concept

Coil Construction

Flexible Conductor, Multiple Turns

Procure as stranded copper wire (5-20 mil dia), rectangular shape, extruded polymer jacket

Prepare for winding with half-lapped Kapton tape and half-lapped glass cloth

Epoxy encapsulate between the turns using room temperature curing resin

Copper strands remain loose to accommodate thermal strain during pulse

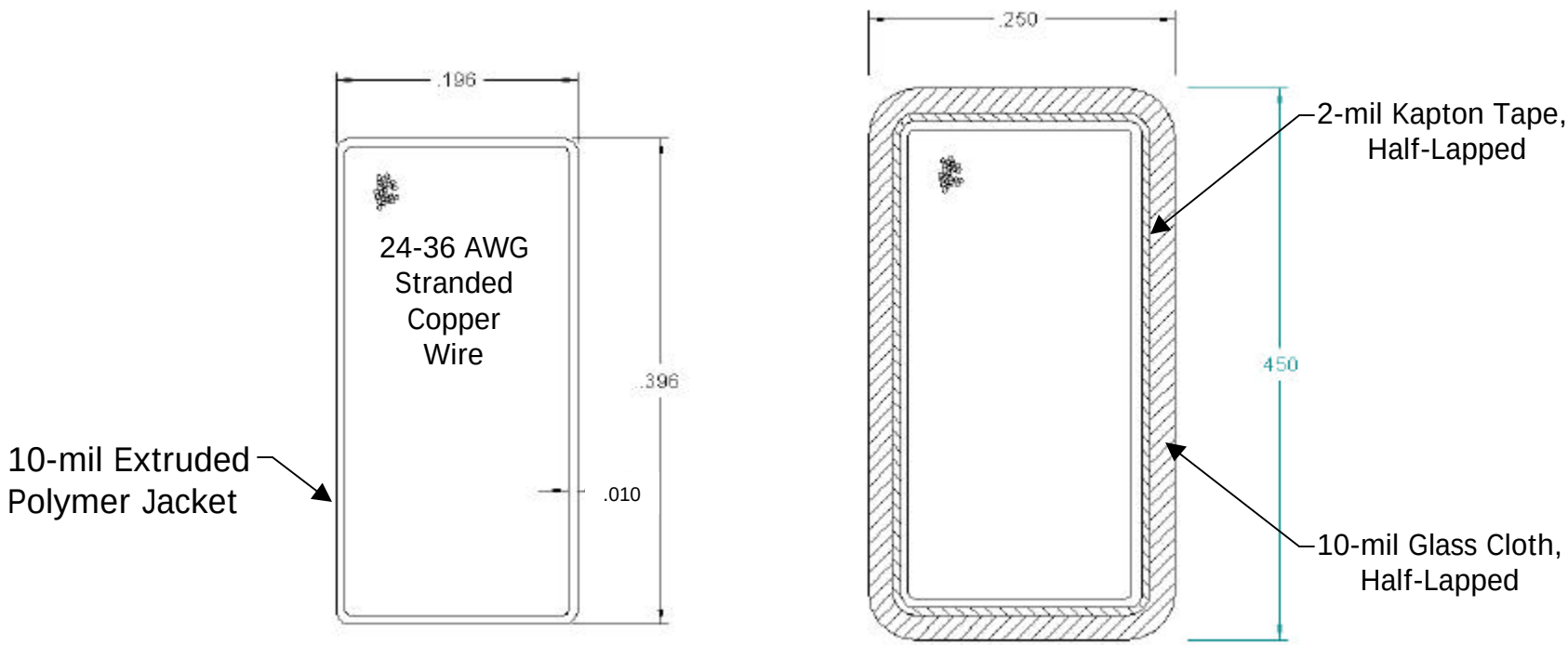

Proposed Concept

Coil Leads

- Two pancake windings in a full-radius groove
- Pancake-to-pancake transition occurs in a pocket in the bottom of the groove
- Layer-to-layer transitions are adjacent
- Leads transition to coaxial configuration

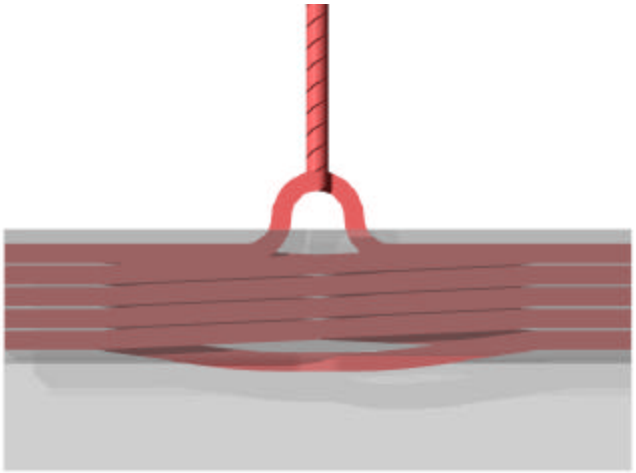

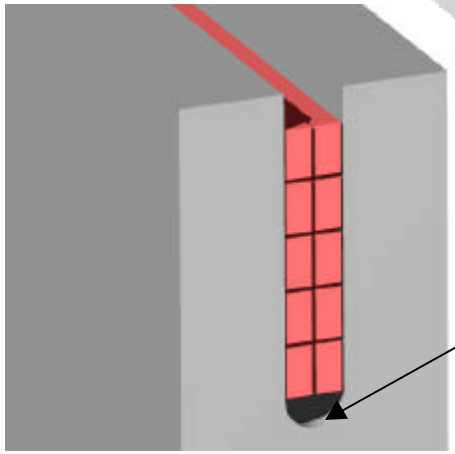

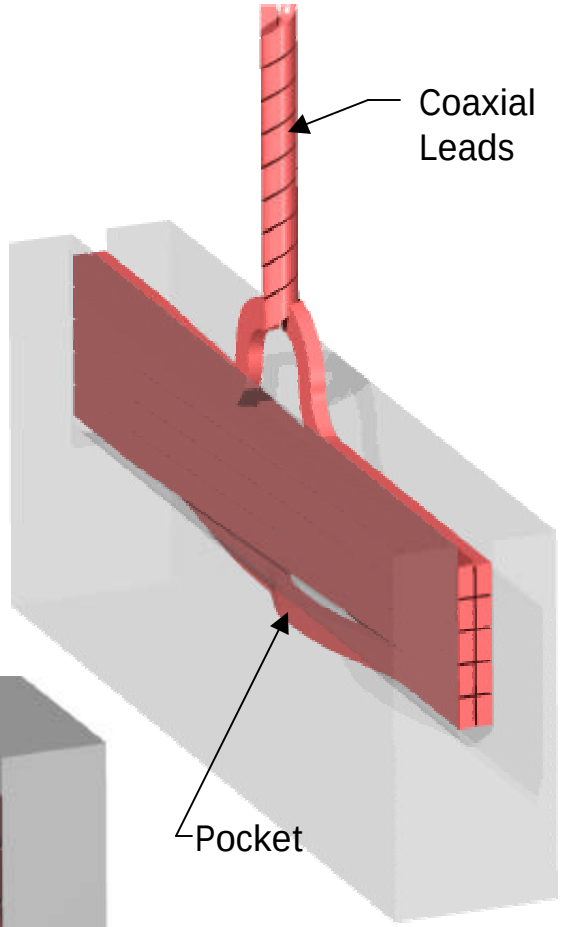

Proposed Concept

Coil Leads

- Inboard mid-plane connection (bean x-section)

- Two coils per lead (self+mirror)

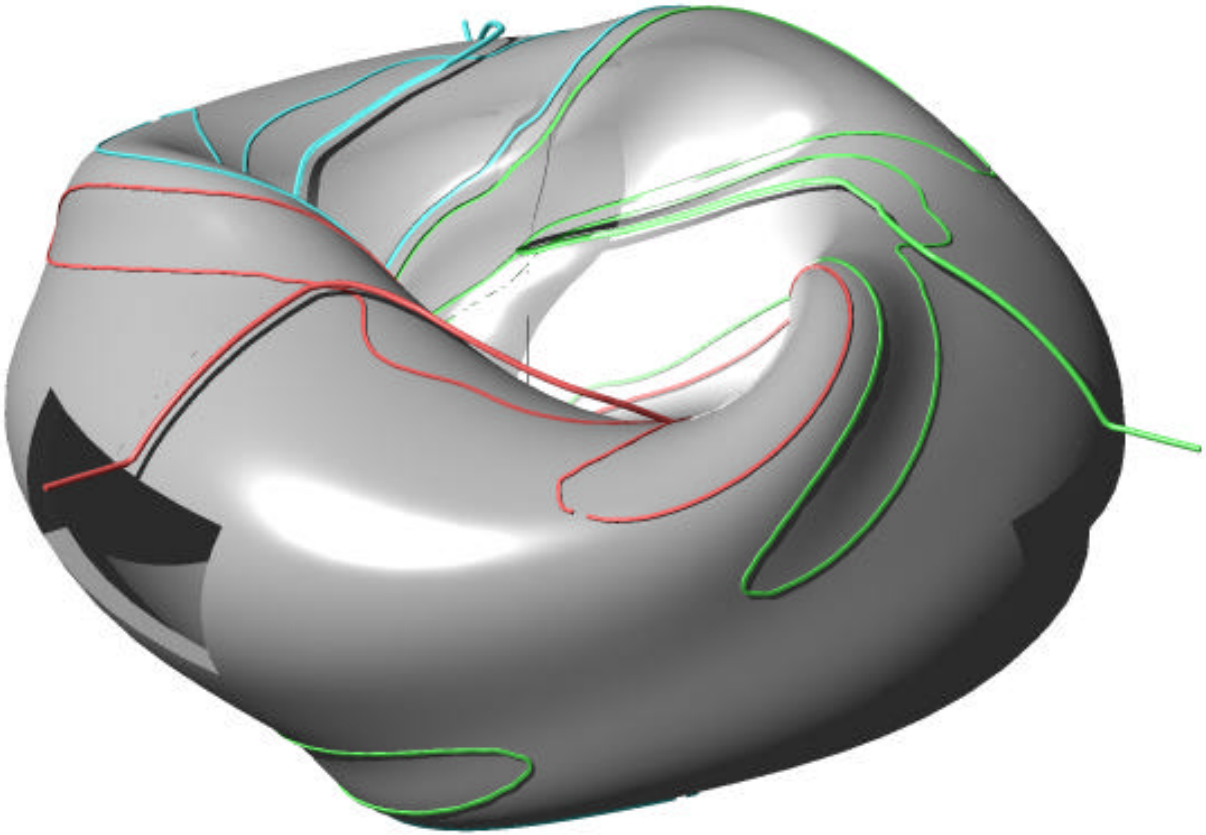

Proposed Concept

Coil Leads

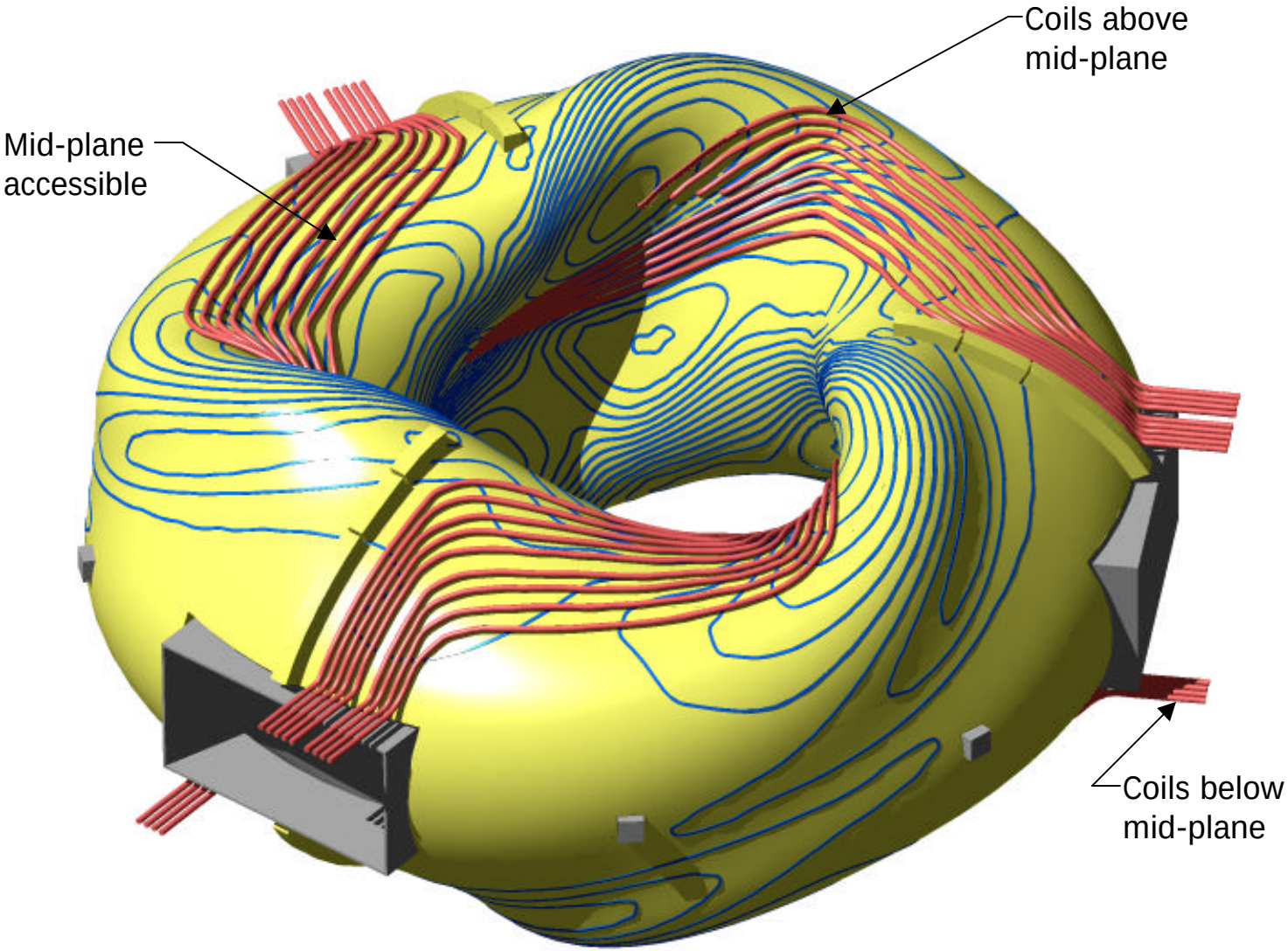

Proposed Concept

Coil Leads

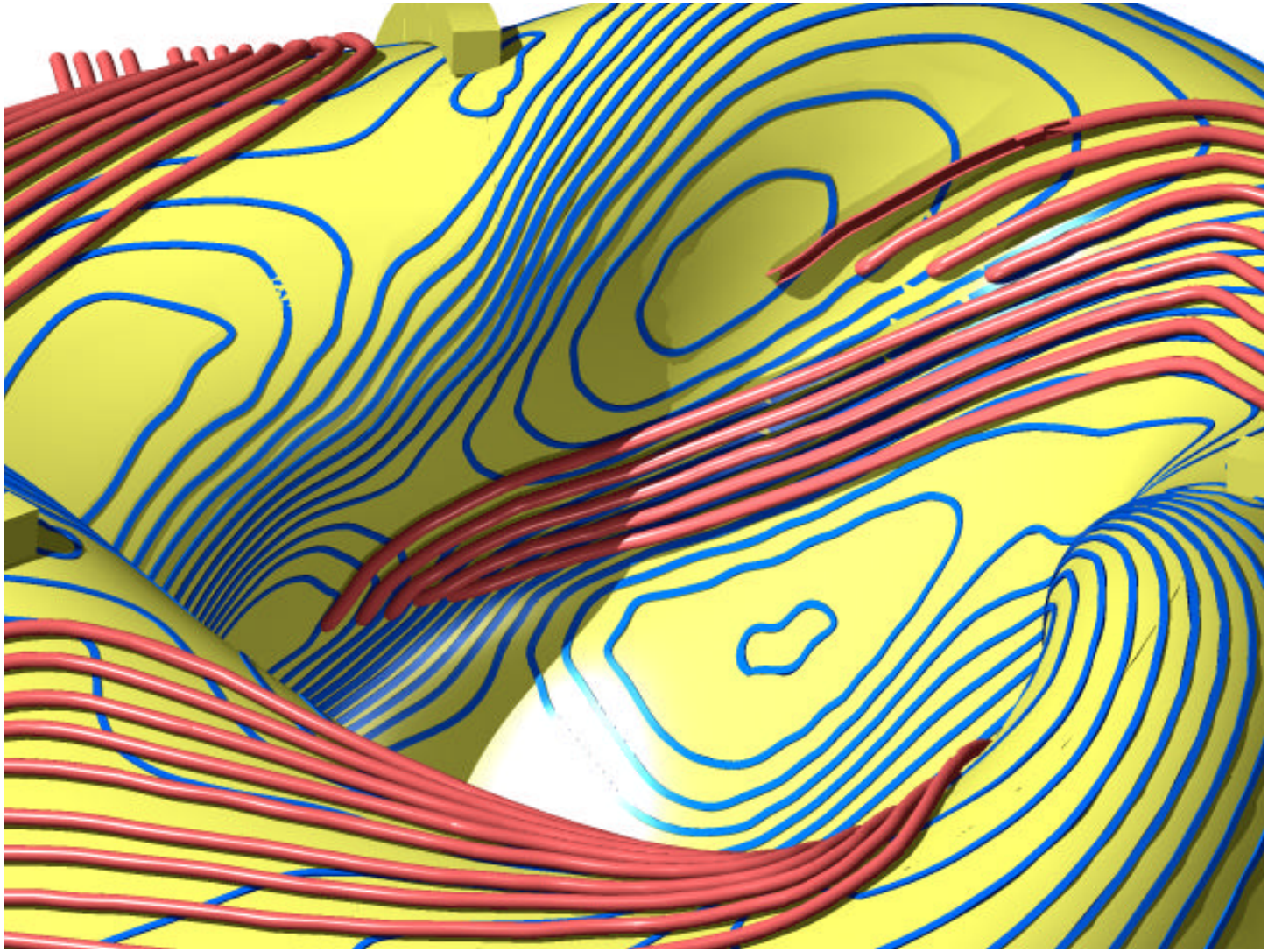

Proposed Concept

Coil Slot Closure

Use existing cooling tube as a plug by welding to shell

Lengths of heavy-wall tube may require pre-forming

Use solid rod if cooling function not needed

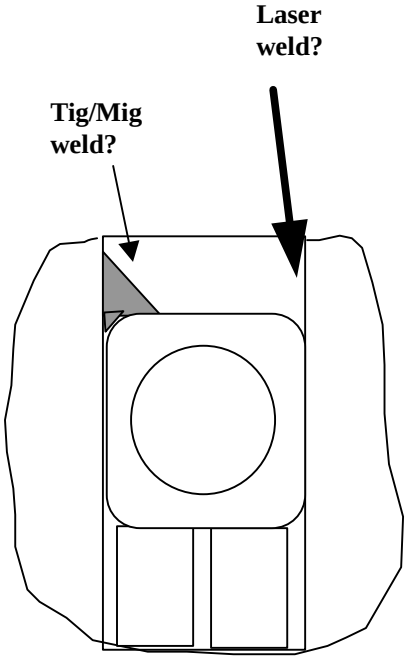

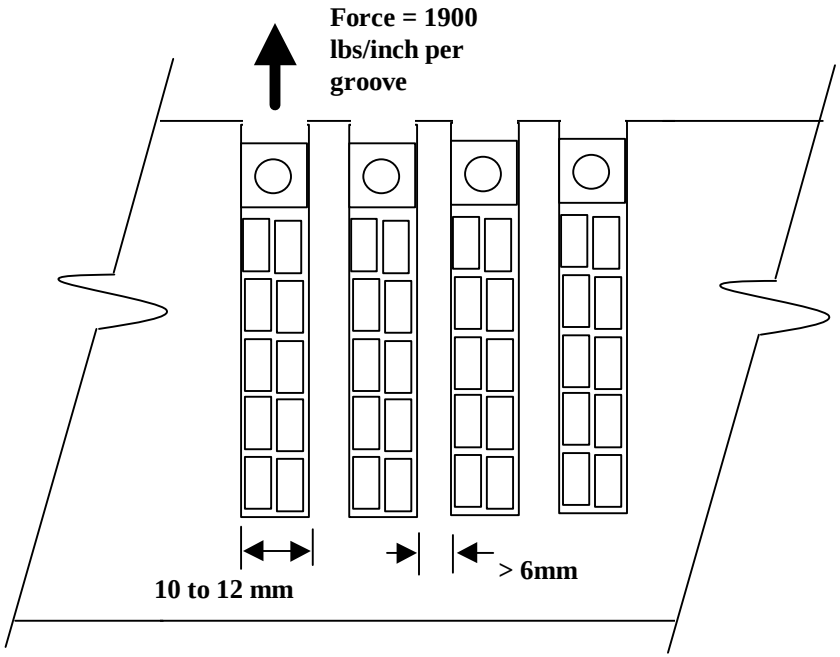

Proposed Concept

Cooling/Insulation

- Cryogenic boundary provided by fiberglass enclosure
- Enclosure may conform to shell or be more generic in shape
- Nitrogen gas flow within prevents frost, cools shell during bake-out
- Flexible connection to vessel ports (100-350C) required

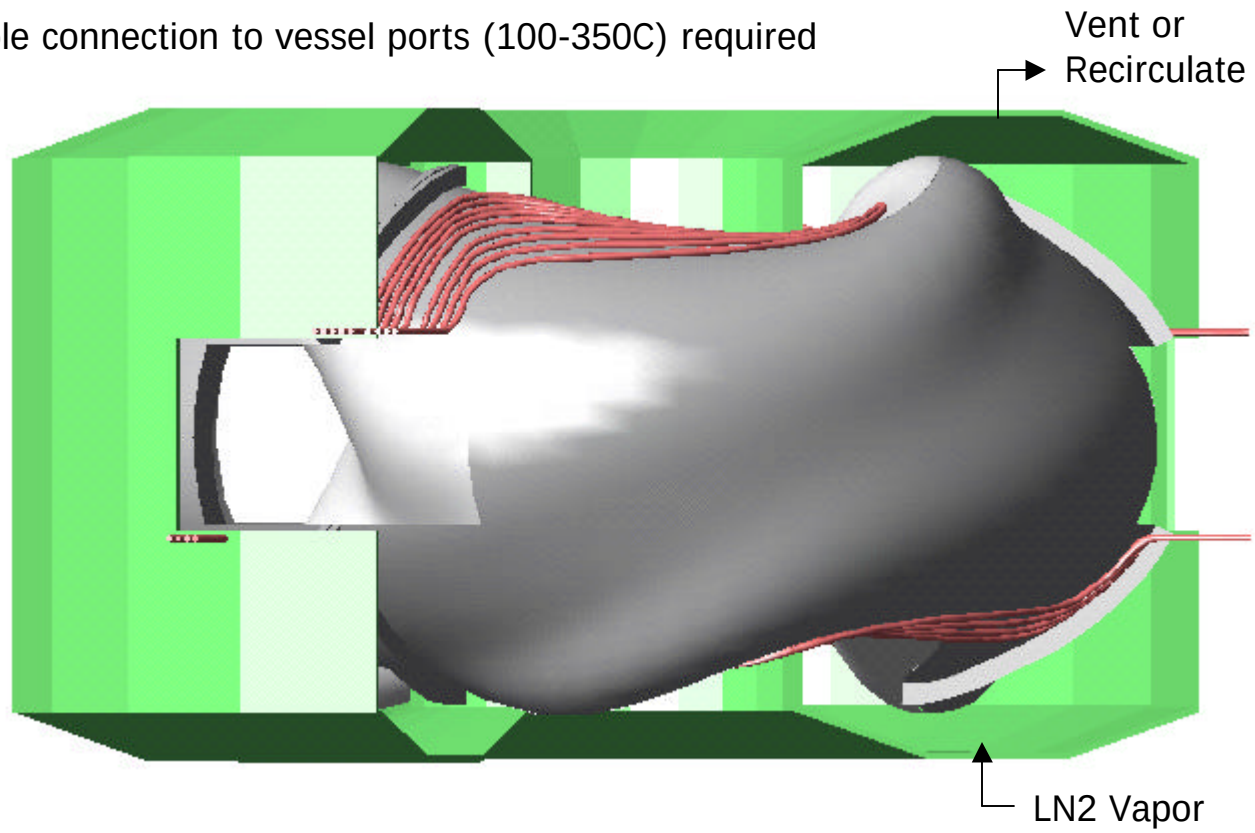

Performance Evaluation

Helical Coils

- 18 x 70-mm winding pack, ~18-kA/cm2 at 2T
- Approx 1-s ESW pulse length, 80-130K temperature rise
- Cool-down in <10-min

Structure

- 8 segments/period give ~35-ms longest time constant
- Maximum coil EM load at 2T is ~1900-lb/in
- EM loads calculated using ANSYS are in good agreement (~10%)
- Maximum bolt load due to EM is 52-kN (shear), 34-kN (axial)
- Combined EM/thermal bolt loading TBD, may need additional space

Cryostat

- Thermal analysis in progress

Performance Evaluation

Coil Cool-Down After Pulse

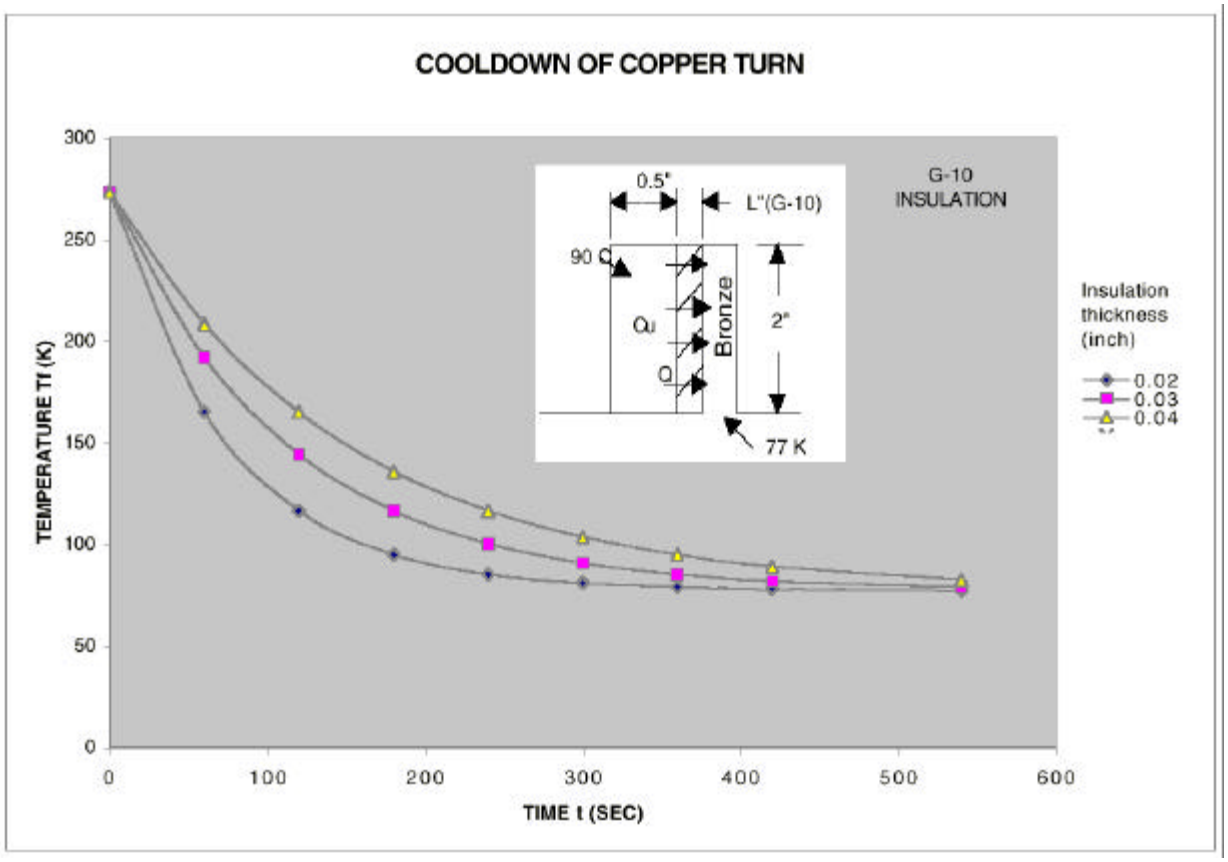

Performance Evaluation

EM Force Calculation Results Comparison

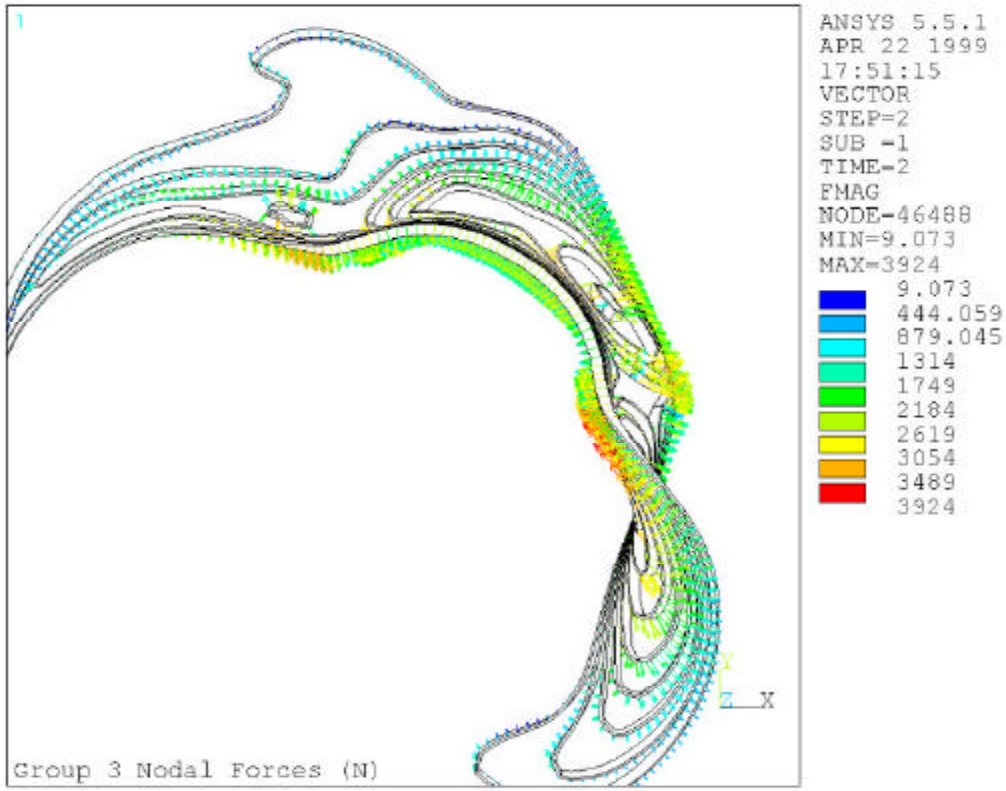

Force Vectors (ANSYS)

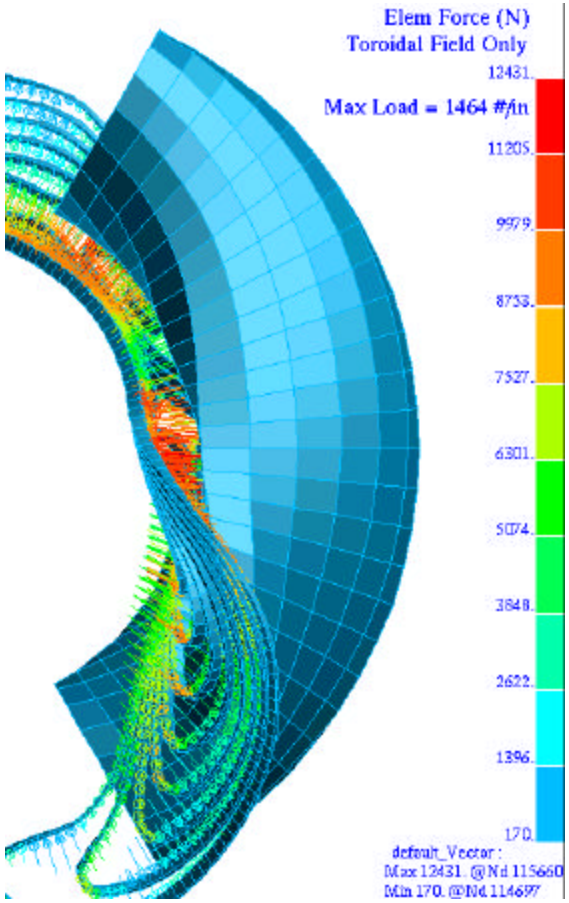

Force Vectors (MAGFOR)

Performance Evaluation

EM Force Calculation Results Comparison

ANSYS Results

FX results differ, but FR=1732-kN (MAGFOR) compares favorably with FR=1554-kN (ANSYS)

Case	FX	FY	FZ
Saddle Group #3	95733	-1730100	-101780
Saddle Group #4	95736	1730100	101760
Saddle Groups #3,4	191470	20	-21
Groups #3,4, 1-Period Trim	778114	-2778	~~24965~~
All Saddles, #1-6	-2	13	-66
All Saddles, 1-Period Trim	-767370	-2050	-880
All Saddles, 1-Period Trim, Z<=0	-375150	1768500	-1273200
All Saddles, 1-Period Trim, Z>=0	-373150	-1770500	1272300

+/- 93.2-kN

+/- 1141-kN

- 415-kN

+/- 1564-kN

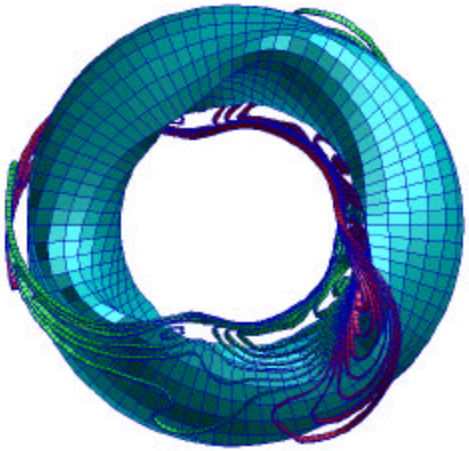

Saddles #3, 4

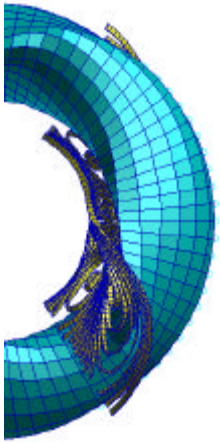

Trimmed to 1-Period

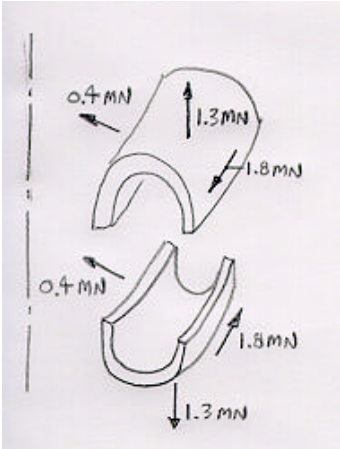

Top/Bottom

Support Structure Bolt Load Estimate

- Max force = 52-kN (shear), 34-kN (axial)
- Larger bolt diam required inboard
- Outboard bolt spacing can be increased

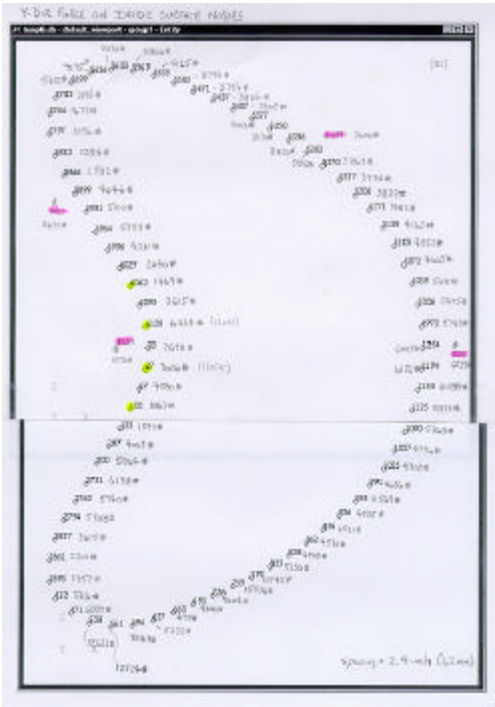

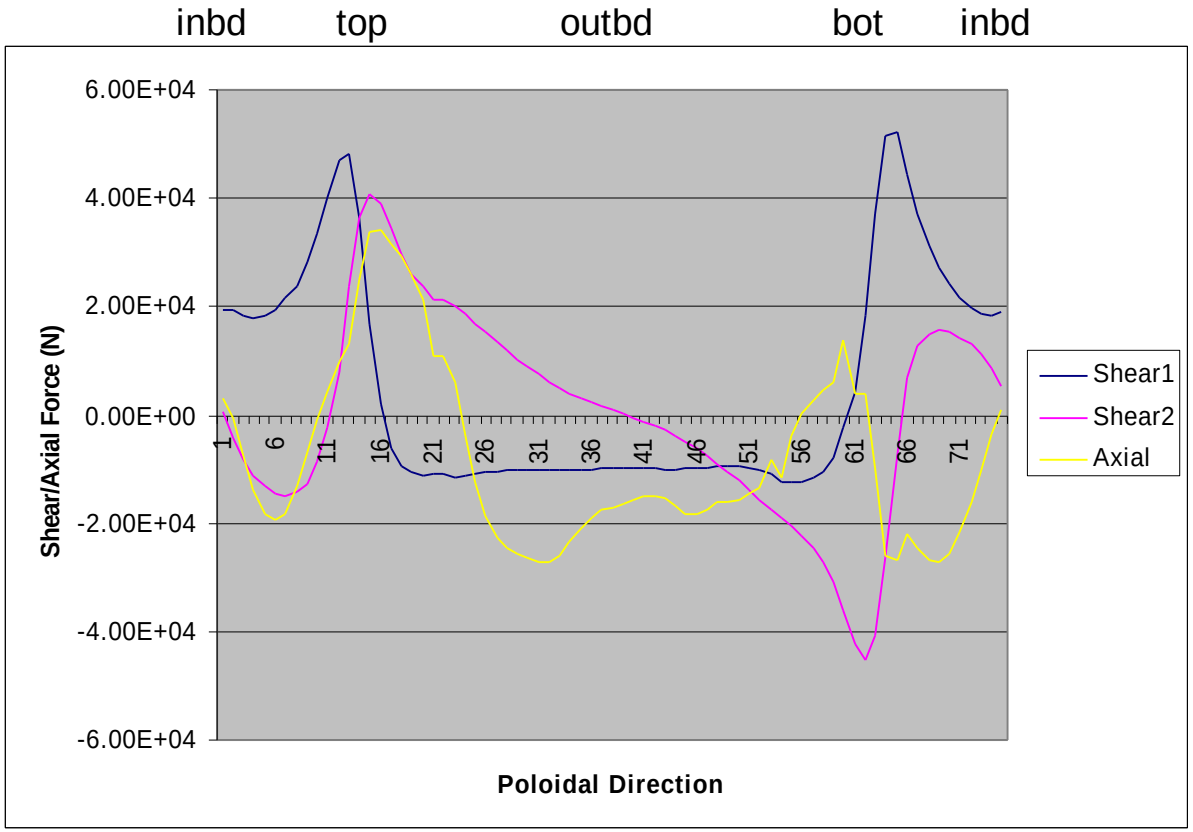

Alternate Bolting Arrangement

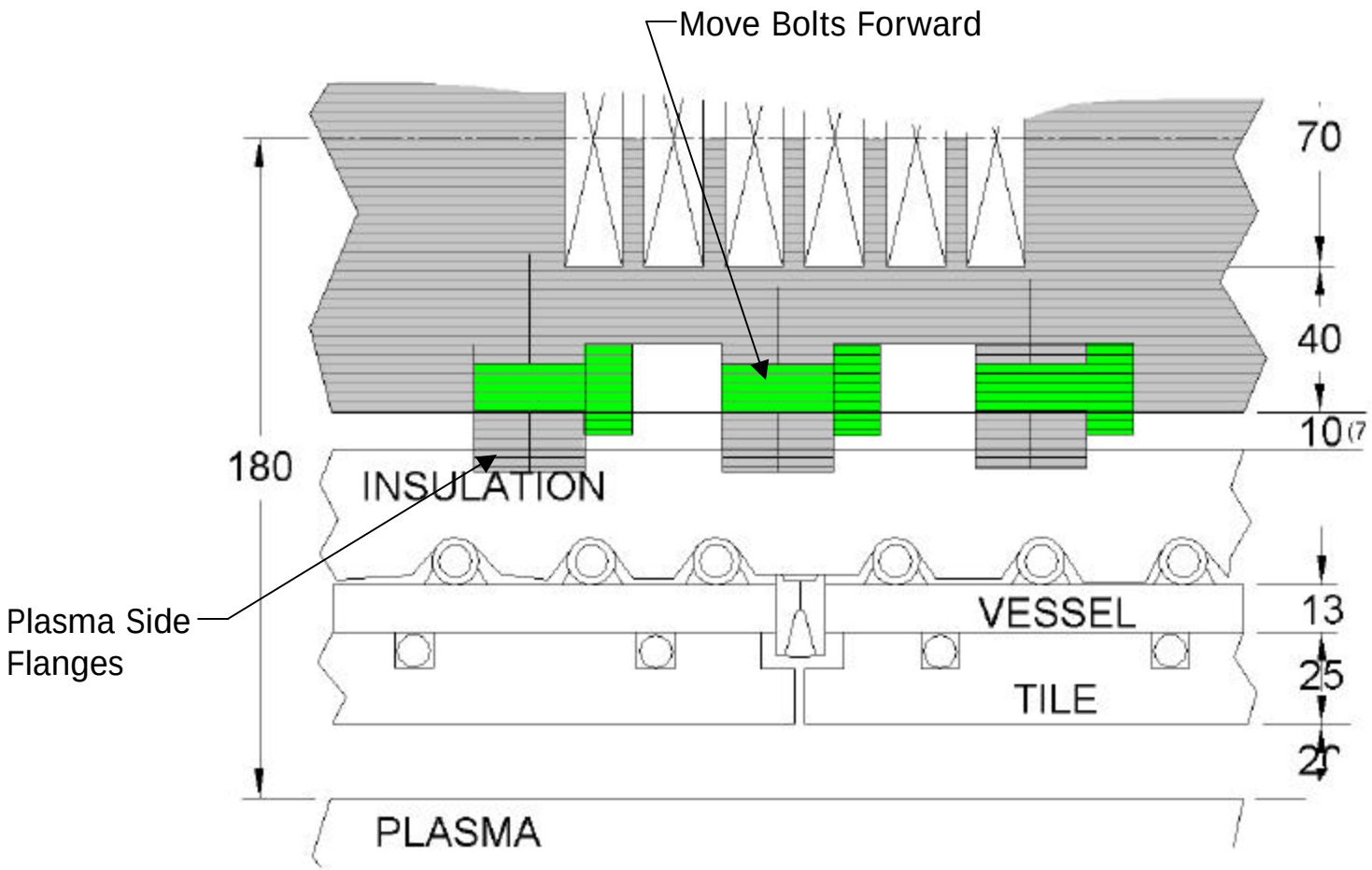

Cost Update

Preliminary results, pending additional information from Y12 General Manufacturing

Case	Option-2C	Eng Study 4/99
Plasma	C10	C10
Coil Set	SAD185.8	SAD185.16
Total # Coils	42	78
Total 1-Turn Length, m	204	408
# Turns/ Coil	2	10
Shell Material	Al-Bronze	Nickel-Al-Bronze
# Toroidal Segments	48	48
# Casting Patterns	3 (cut-up)	8 (as-cast)
Total Weight, ton	16	31
Design, $M	1.6	1.6
Fabrication, $M	2.0	1.5
- Castings		0.413
- Part Machining		0.851
- Pre-Asm/Final Machining		0.212
Assembly/Winding, $M	1.1	2.4
R&D, $M	0.6	0.6
Contingency, $M	1.2	1.4
Total, $M	6.5	7.5

Cost Update

Effect of Shell Material and Segmentation on Cost ($K)

Configuration	Castings	Part Machining	Pre-Assembly/ Final Machining	Total Fab
Stainless Steel, 9 Seg (11-ms)	211	608	299	1119
Nickel-Al-Bronze, 9 Seg (77-ms)	211	354	115	680
Nickel-Al-Bronze, 24 Seg (34-ms)	413	851	212	1475
Nickel-Al-Bronze, 36 Seg (19-ms)	574	1248	290	2112
Nickel-Al-Bronze, 120 Seg (<10-ms)	1703	4028	836	6567
Aluminum, 120 Segments	1703	3701	817	6222

Issues / R&D Plans

What are primary open decisions for saddle coil windings?

Issue	Options	Comments	Risk	Resolution
Conductor current density is too high due to close spacing of coils 3-D effects make grooves even tighter at root of bends	Reduce temperature of coil to increase pulse length	Expensive to sub-cool LN	*Low* (cost is main issue)	Check cost
	Reduce number of turns to increase packing fraction	Increases field errors, Conductor is harder to wind	*Med* (design of leads is more difficult, may not have winding solution)	Check feasibility of winding
	Fewer coils	Poor reconstruction	*High* (may not have workable coil set)	Must be resolved by physics
	Put coils closer to plasma	Can't go much closer than 18 cm	*High* (shell design, vv tolerances, therm insul. More difficult)	Check feasibility of reducing insulation thickness, gaps, etc.
	Put two saddles in one groove in tight regions	May have second order benefit, but cooling, winding accuracy may suffer	*Med* (machining details of groove may be tricky)	Must be resolved by physics
Cooling of conductor	Conduction to shell	Better use of space, depends on material of shell	*Low* (most straightforward concept)	Total cost for effective system
	Conduction to strap	Works for any material	*Med* (strap cooling not easy)	

Issues / R&D Plans

- Curvature effects can be minimized by making coils parallel in critical regions

- Program using Pro/E geometry has been demonstrated

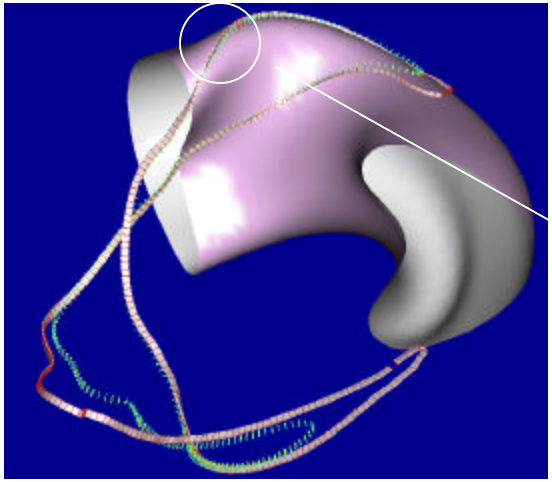

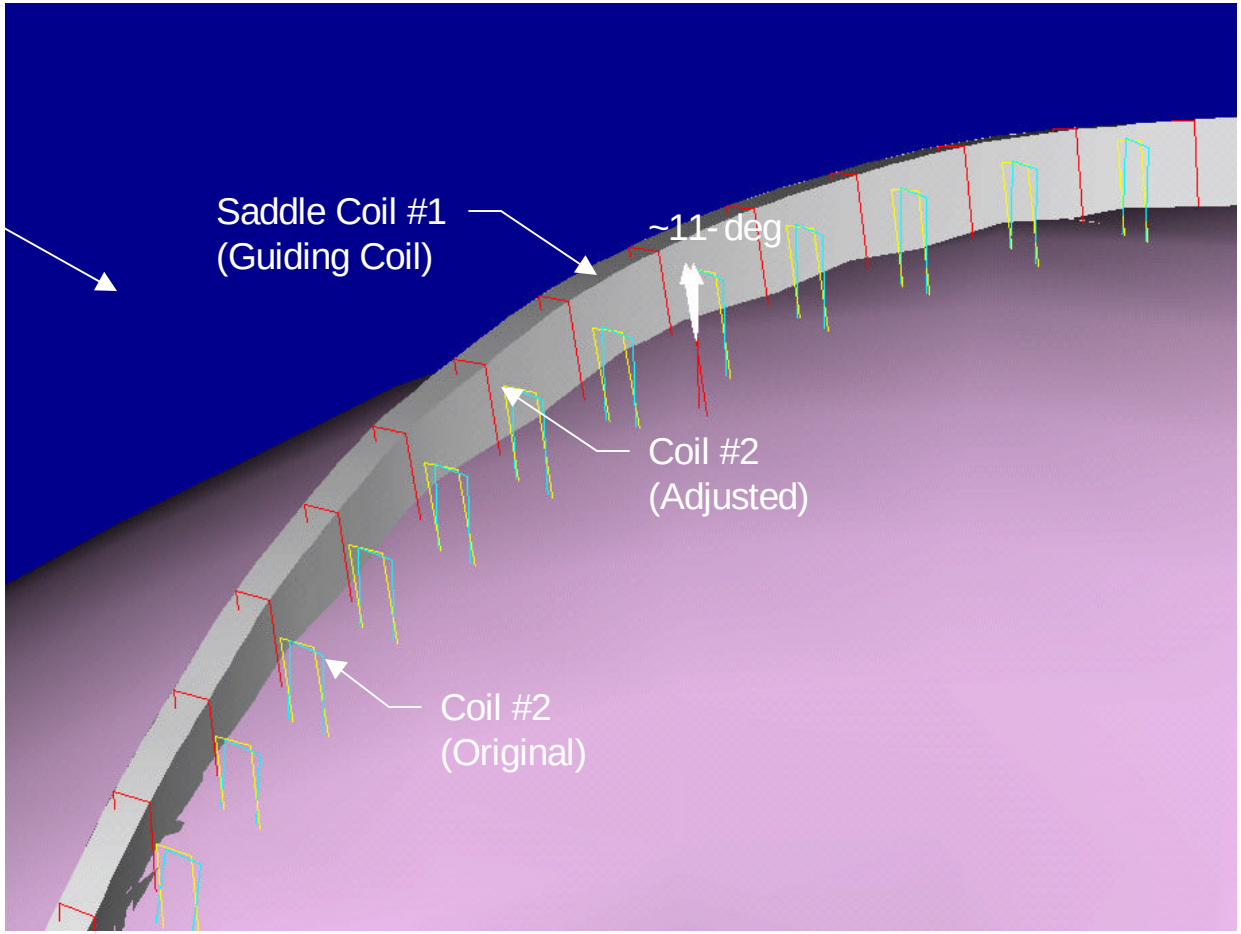

Issues / R&D Plans

What are primary open decisions for structural shell?

Issue	Options	Comments	Risk	Resolution
Fabrication option	Wedges	Material Fastening wedges together	*Med* (wedge joining main issue)	8 wedges per field period chosen as baseline
	Ribs with epoxy fill	Material properties, fastening ribs together, behavior of composite structure at LN temperature	*High* (Fill operation is high risk)	
	Structural shell with epoxy fill	Material properties, cost of two nested shells	*High* (same as above)	
Shell material	304L stainless	Good except for machining and thermal conductivity	*Low*	Shops prefer aluminum or bronze, but time constant eliminates aluminum Bronze alloy C95800 chosen for baseline concept
	Bronze alloy	Good, but hard to weld, may have permeability problem (μ = 1.05 to 1.15)	*Med*	
	G-10	Low electrical conductivity, hard to machine, bad CTE	*High*	
	Graphite epoxy	Not clear	*High*	
Cooling	Closed loop	Safer, more complicated	*Med* (leaks)	Total cost for safe system
	Open loop	Like Alcator C-Mod	*Low* (leaks no problem)	

Issues / R&D Plans

FY99 R&D Activities

Conductor Compression Test

Goal

Establish stress-strain behavior of cable in rigid slot

Status

Drawings 90% done; estimate $30k, 10wks to complete tests

Winding/Thermal Cycle Test

Goal

Investigate coil behavior during pulse thermal cycles, cool-down

Status

Consulted with SW facility personnel, drawings 60% done

Limit FY99 effort to fabrication, some testing (~$90k)

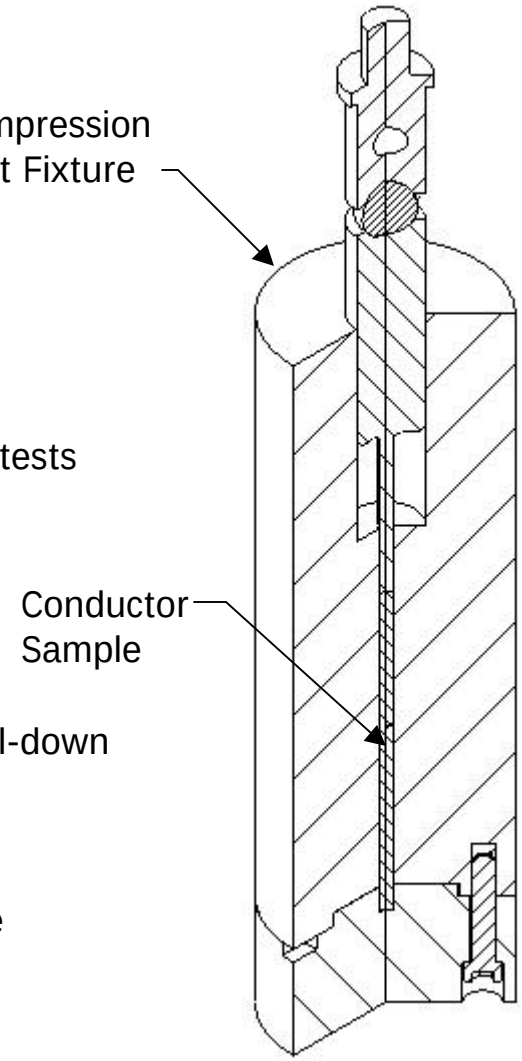

Issues / R&D Plans

Winding/Thermal Cycle Test

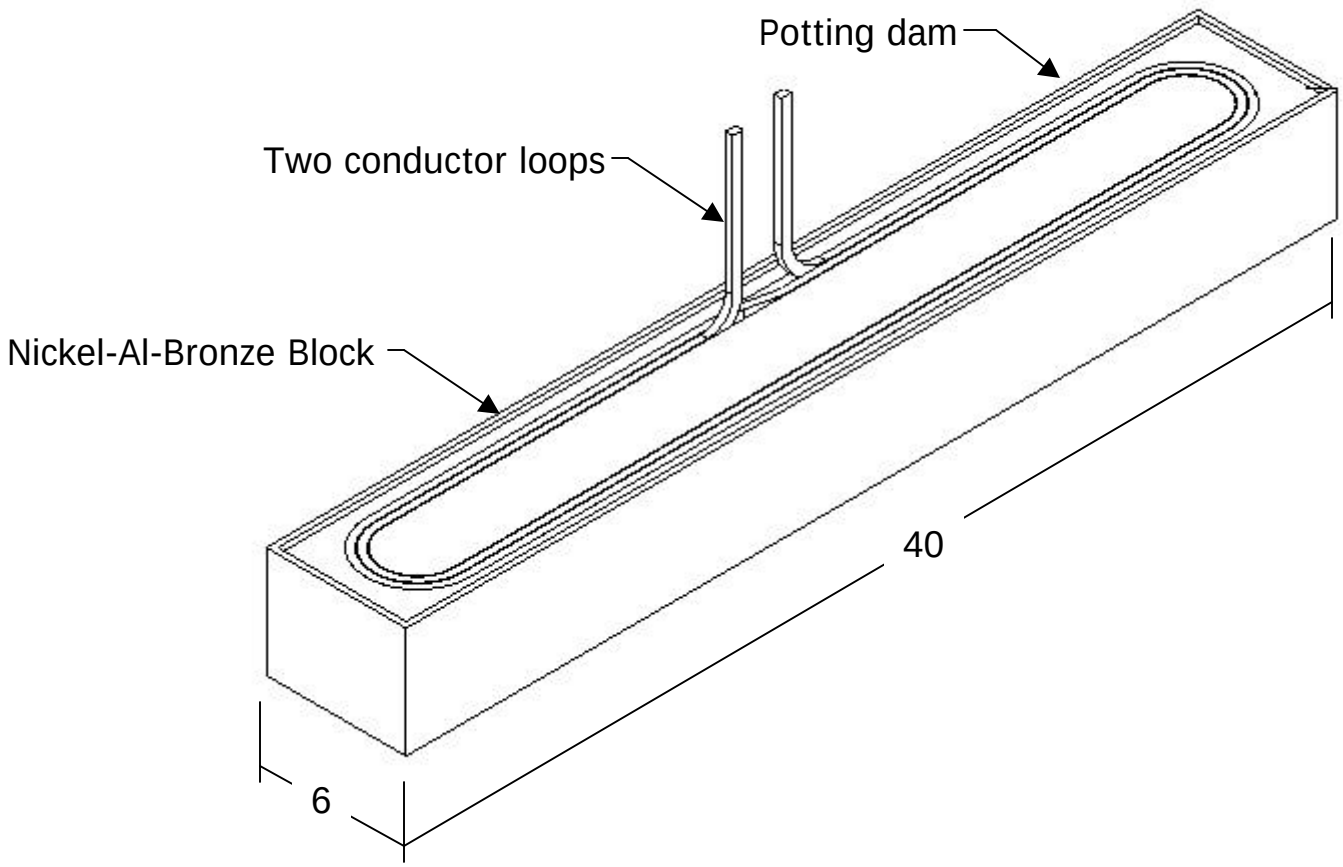

Conclusions / Plans

- Major configuration issues have been addressed

  Further evaluation is required for:

  - Wedge-to-wedge bolted joints
  - Coil slot closure scheme
  - Thermal performance

- C82 does not appear to negatively impact the configuration
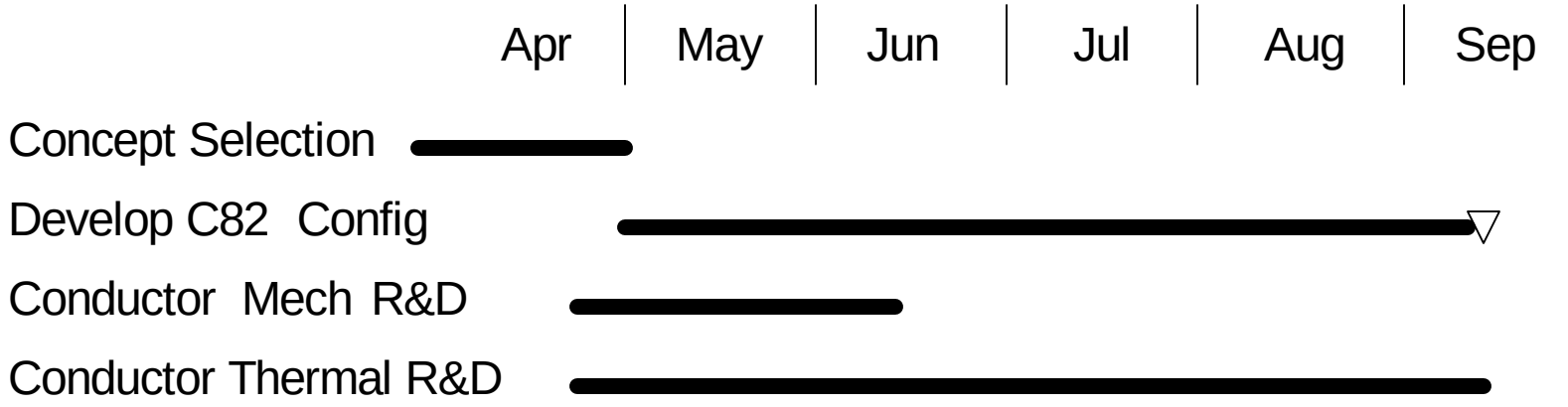
Plan