NCSX PROJECT MEETING

January 11 - 12, 2000

Mike Cole

NCSX ACCESS TOPICS

- Components Restricting Access
- Facility/Machine Access
- Vacuum Pumping
- Launcher
- Neutral Beam Injection
- Diagnostics

NCSX COMPONENTS RESTRICTING ACCESS

- Saddle Coils
- Shell
- PF Coils
- TF Coils
- Neutral Beam Injection
- Support Structure

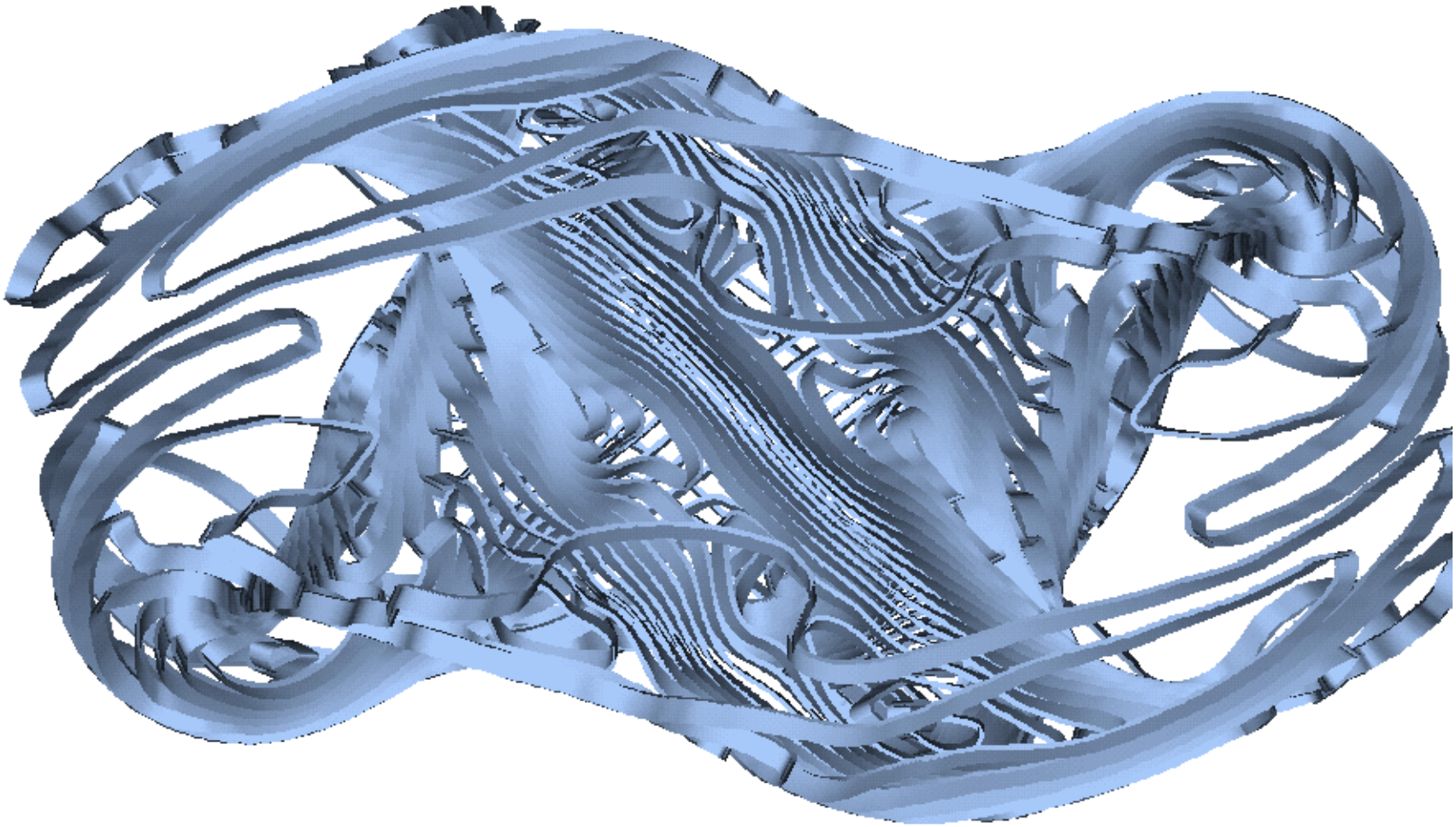

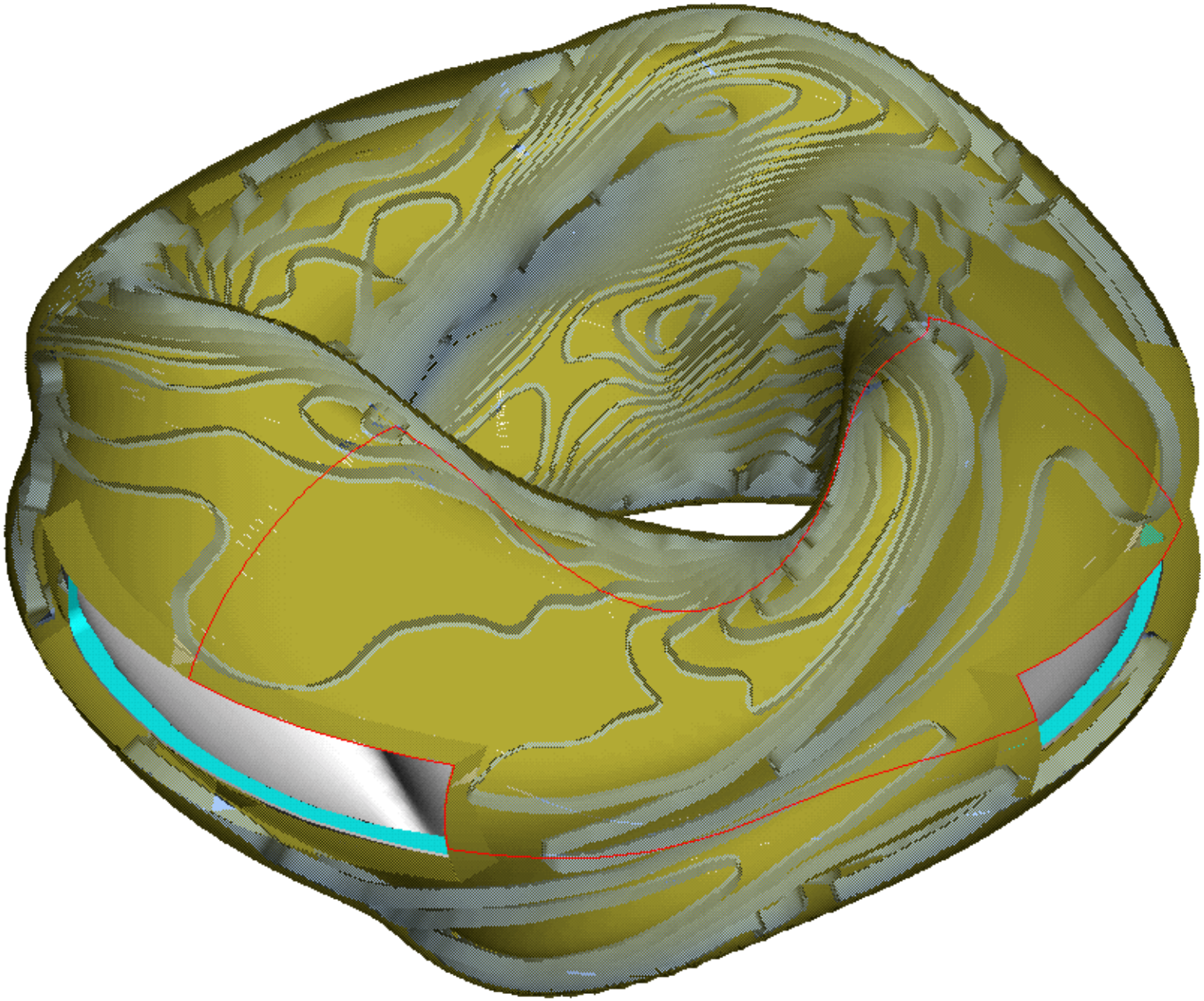

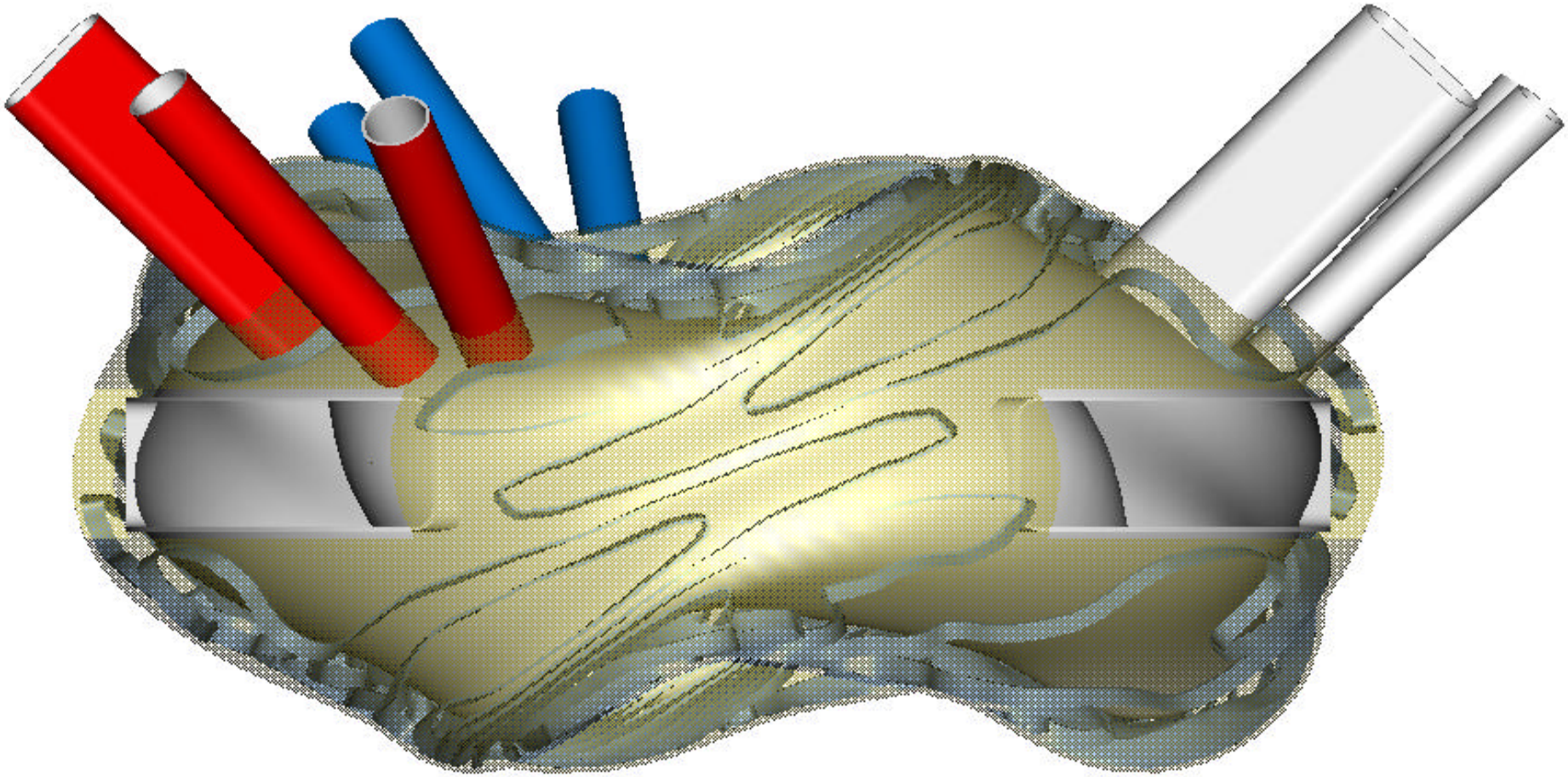

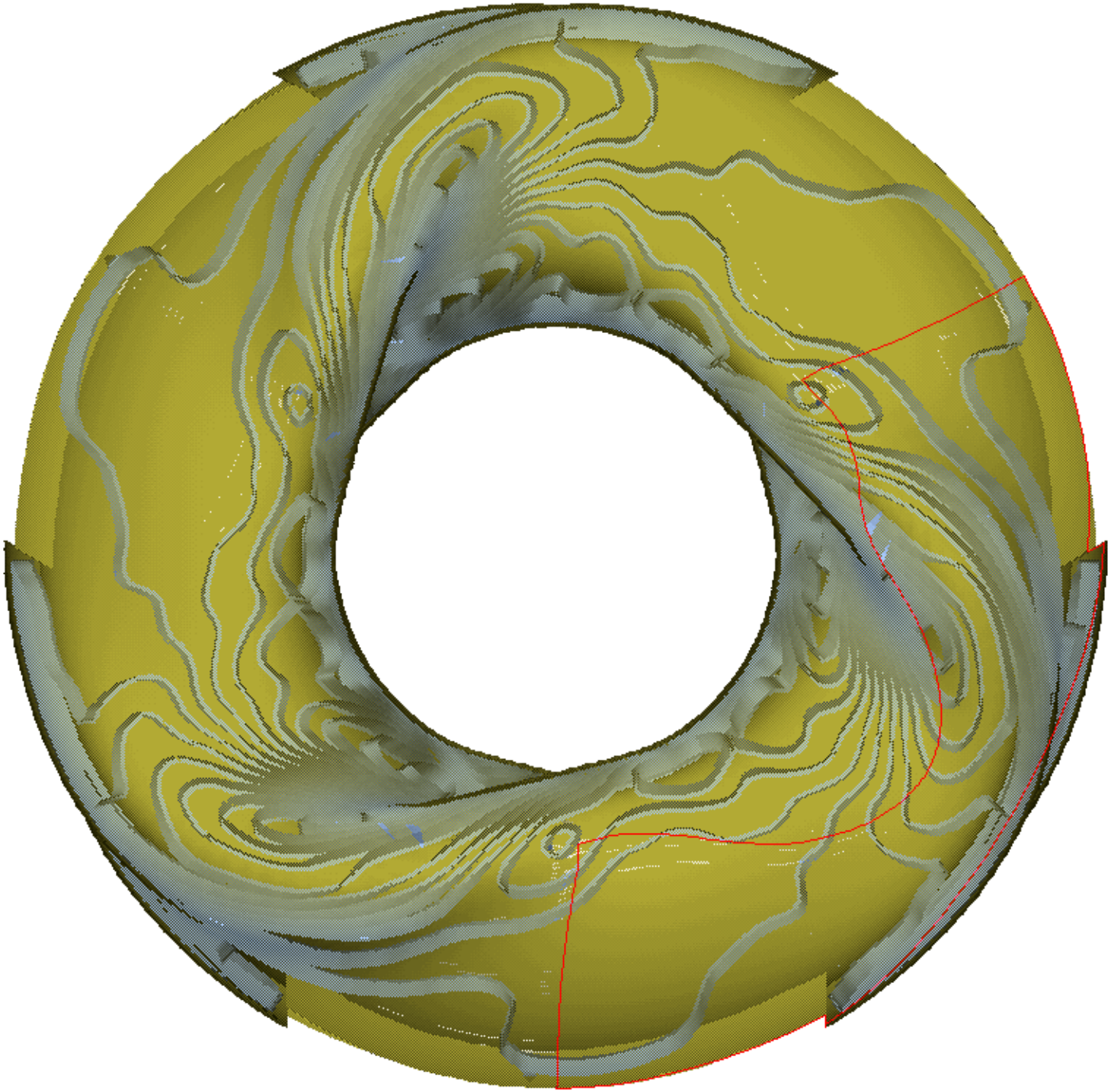

NO.	REVISION	BY	CH	SUP	APPROVED	DATE

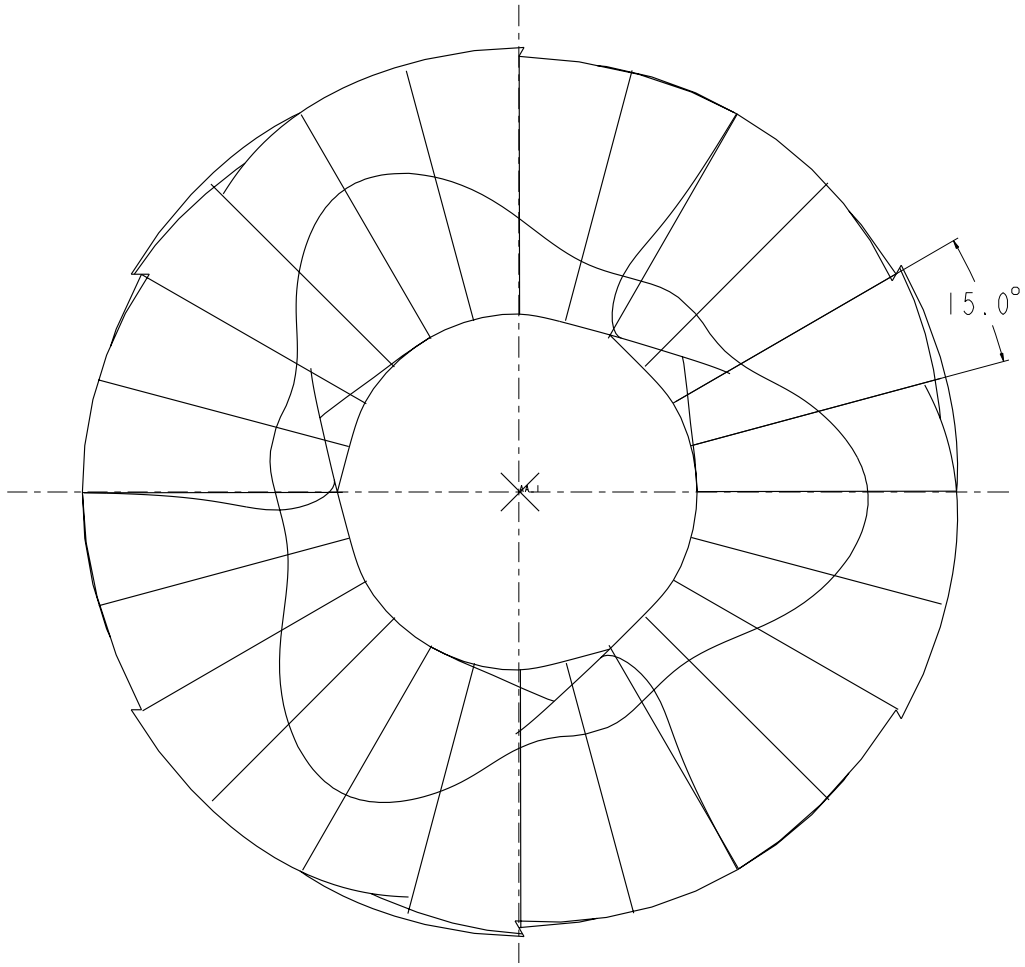

ITEM NO.	DRAWING NO.	NOMENCLATURE OR DESCRIPTION	MATERIAL	QTY REQD
2	S01E123011			1
1	S01E123010A	--		1

PARTS LIST

COMPUTER GENERATED DRAWING. MANUAL CHANGES NOT PERMITTED

Pro E

DO NOT VERIFY INFORMATION BY SCALING DRAWING

weight=1238.5 lbs

DATE:

WELDING ENGINEER

APPVD _____ DATE

NEXT ASSEMBLY

CENTRAL FILES:

UNLESS OTHERWISE SPECIFIED

DIMENSIONS ARE IN INCHES

MACHINE SURFACES 32

BREAK SHARP EDGES .005/.020

TOLERANCES NON-CUMULATIVE

DECIMAL-INCH		FRACTIONS	
.X	±.100	0°-12°	±1/16
.XX	±.030	12°-72°	±1/8
.XXX	±.005	72°-120°	±1/4
ANGULAR	±0°-15'	OVER 120°	±1/2

PRINCETON PLASMA PHYSICS LABORATORY
PRINCETON UNIVERSITY
NATIONAL COMPACT STELLARATOR EXPERIMENT

XX
XX
XX

DIV: MECH. ENG. DATE:

ENG: XX

DSN: XX

CHK: CHK SUPV

APPROVED

S01E123010A

SHEET 1 OF 1 REV 0

EMI

S01E123010A

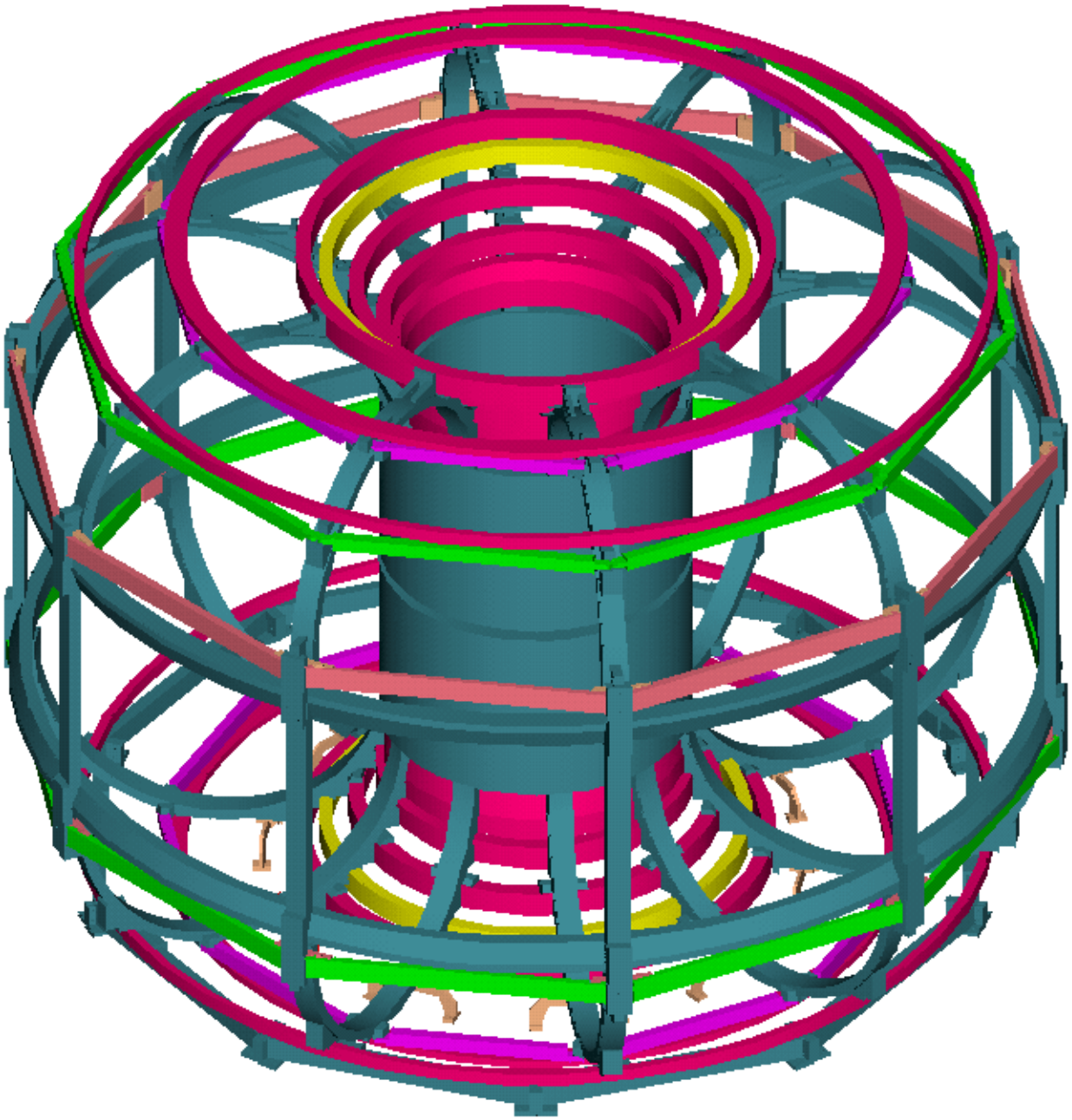

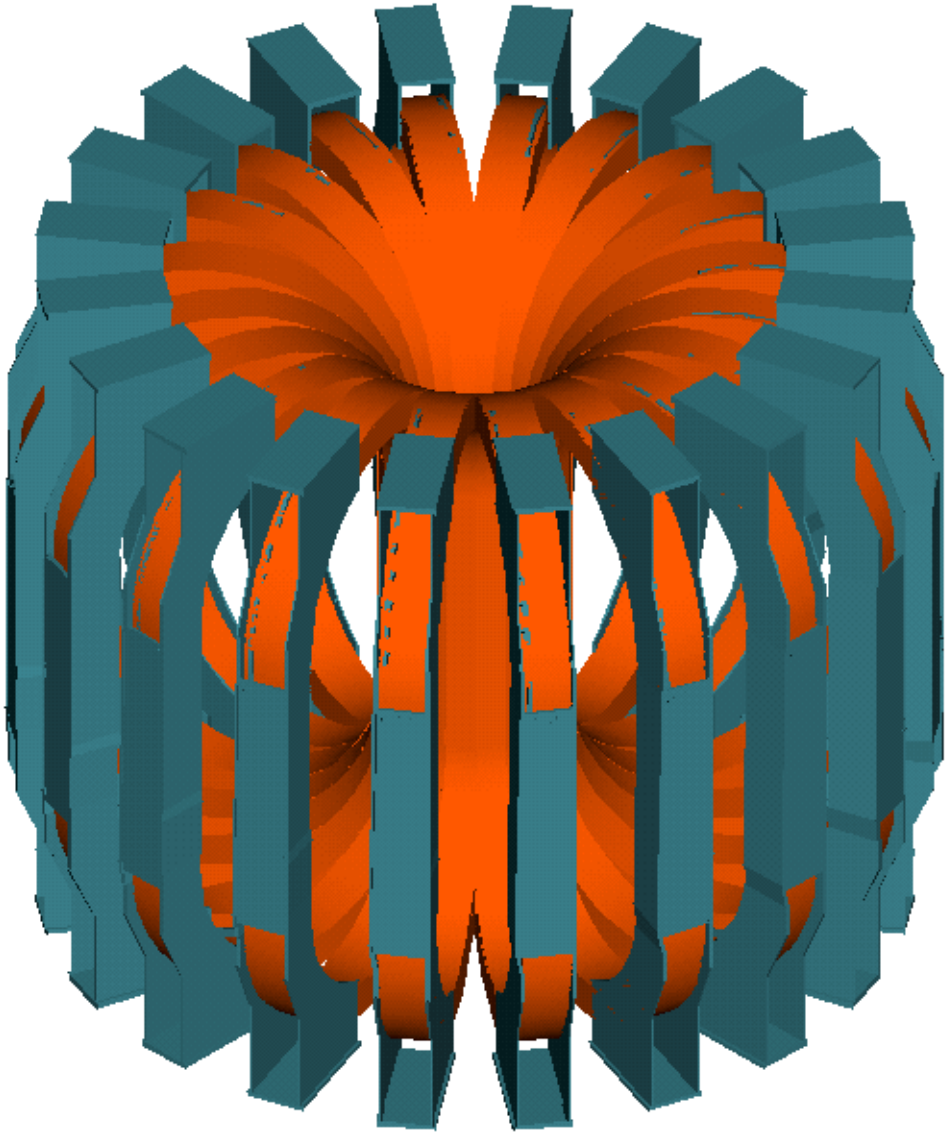

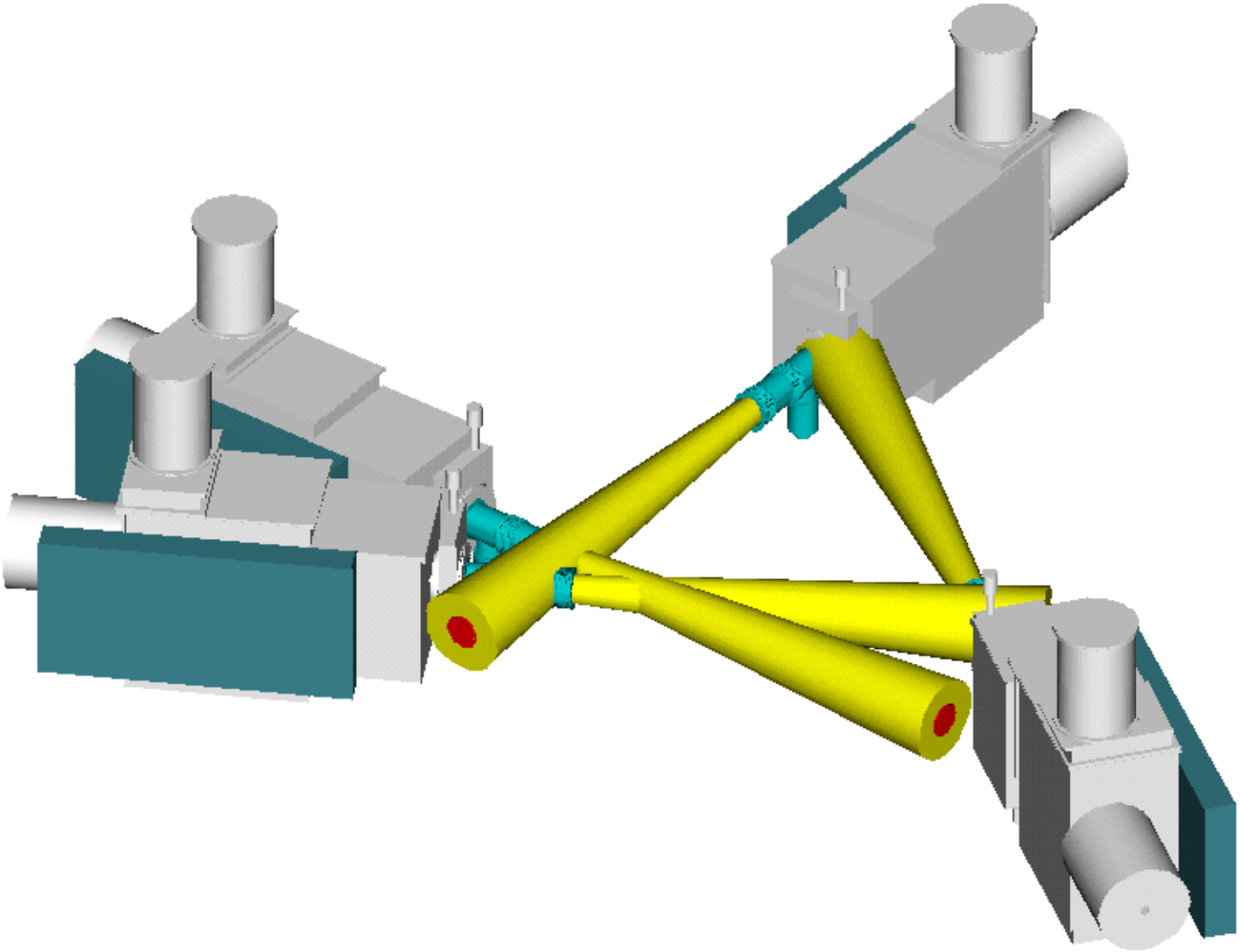

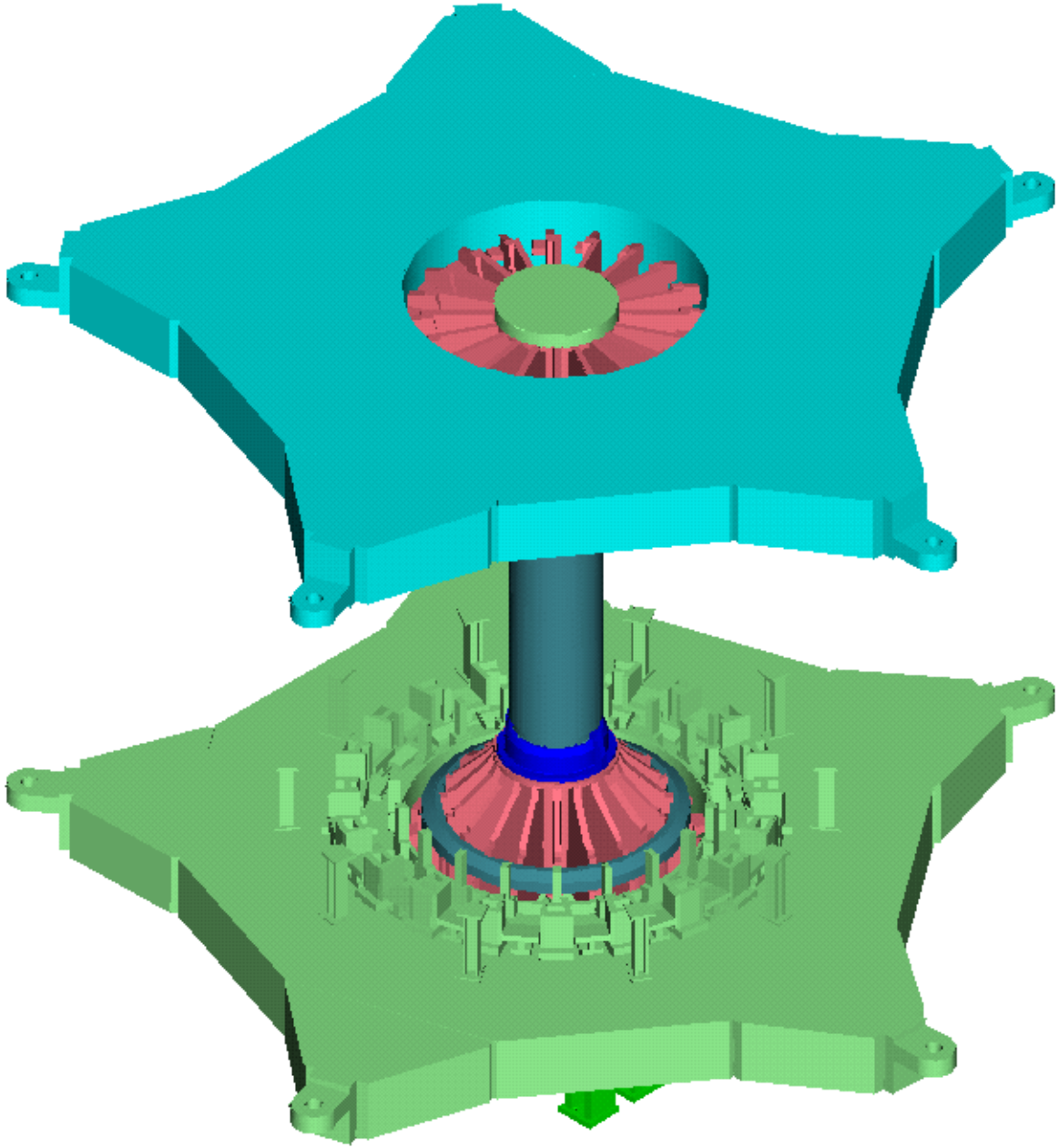

SIMPLFD REP:STRUC

Facility/Machine Access

- A combined PLT and PDX test cell is the favored choice.
- NCSX would be relocated in the combined area

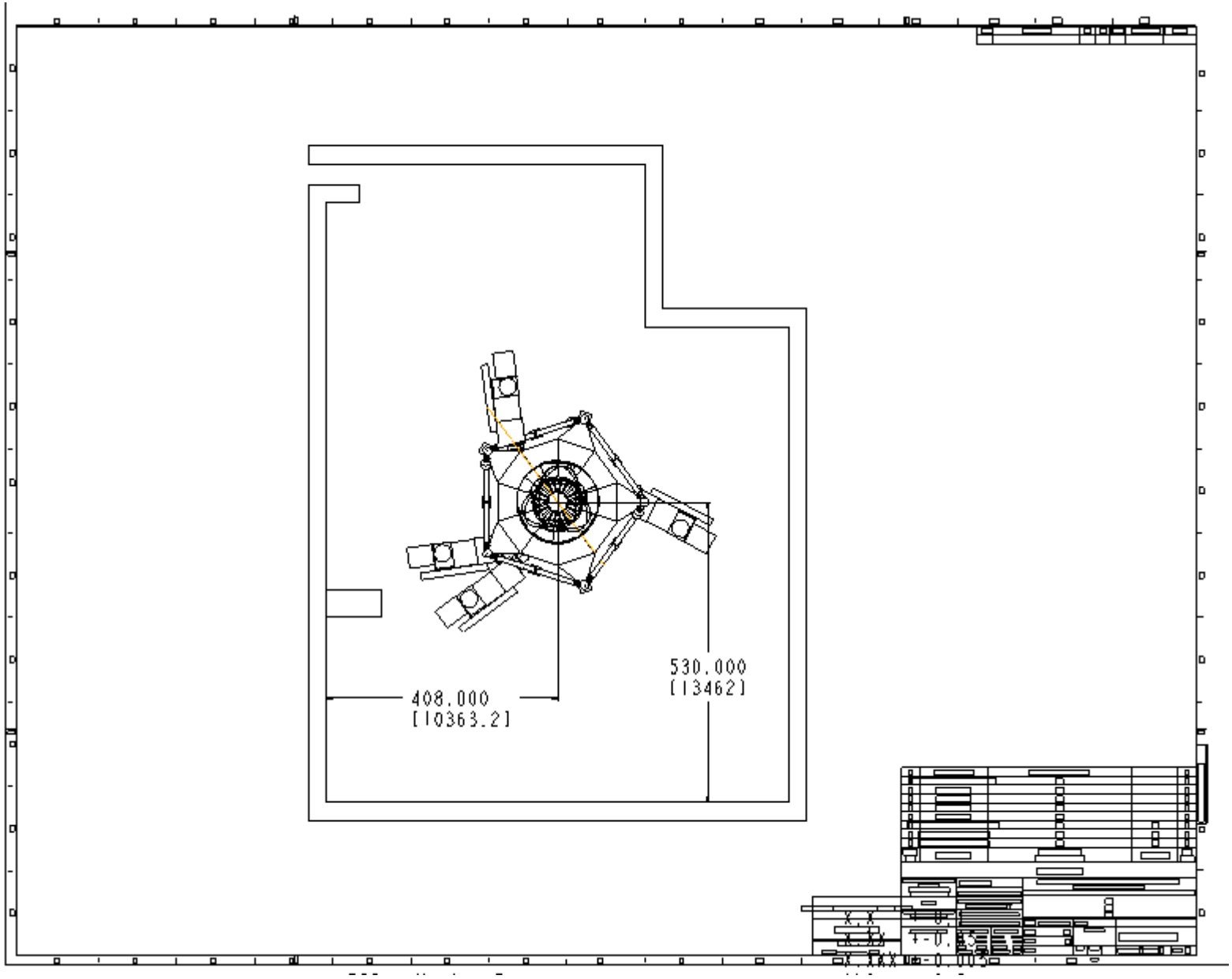
408.000
[10363.2]
530.000
[13462]

NCSX - PUMPING ACCESS

- Pumping access through the neutral beam ports appears to be acceptable.
- Drift duct configuration can be modified to allow pumping from the bottom of the drift tube.
- Vertical access outside of the TF coils does not appear to be a limiting factor.
- Vacuum vessel port height of approximately 17 in. would limit the vertical height and the TF coils would limit the horizontal width to approximately 12 in.

NO.	REVISION	BY	CH	SUP	APPROVED	DATE

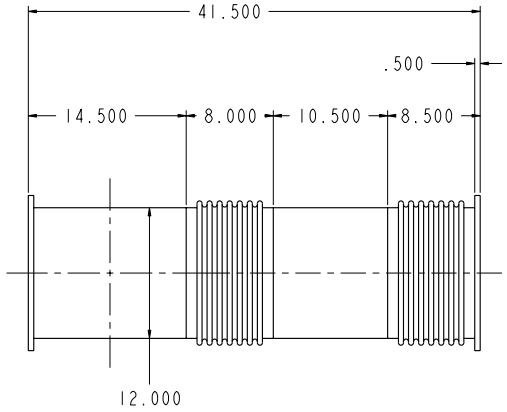

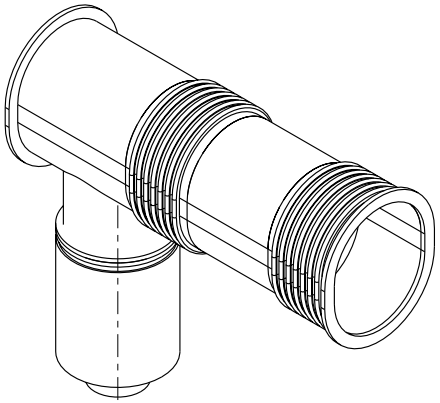

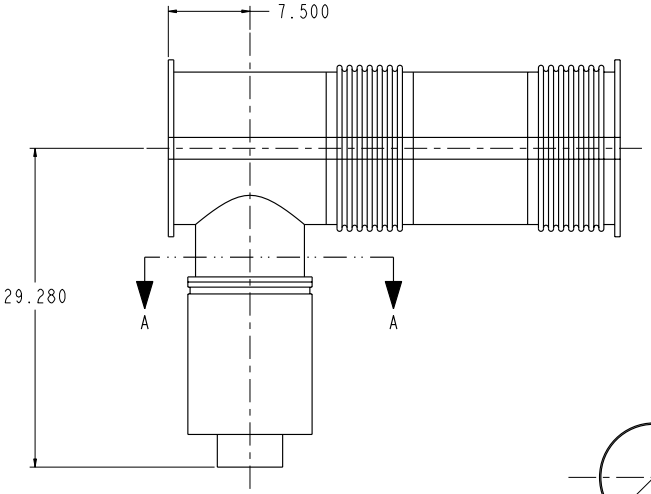

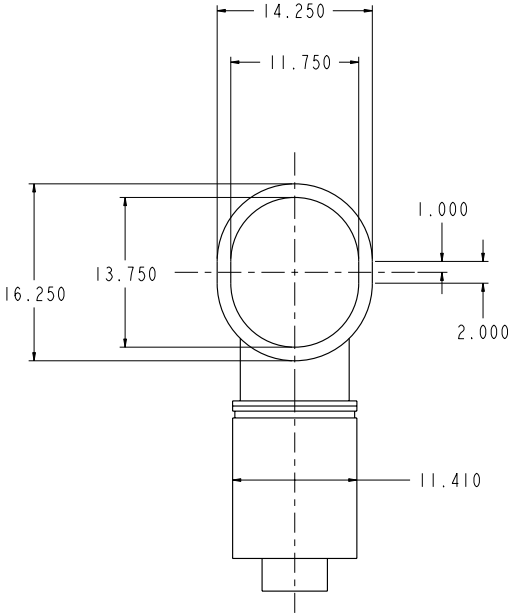

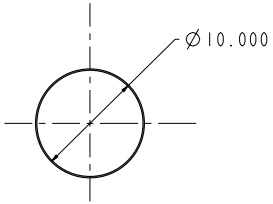

SECTION A-A

ITEM NO.	DRAWING NO	NOMENCLATURE OR DESCRIPTION	MATERIAL	QTY REQD
7	S01E310005A	Drift Duct Assembly		1
6	S01E310030	Varian V1000HT	--	1
5	S01E310029	--	--	1
4	S01E310028	--	--	1
3	S01E310024	--	--	2
2	S01E310023A	--	--	1
1	S01E310022	--	--	2

PARTS LIST

S01E310005A

COMPUTER GENERATED DRAWING MANUAL CHANGES NOT PERMITTED

Pro E

DO NOT VERIFY INFORMATION BY SCALING DRAWING

weight=weight[.1][.1]

DATE: xxx

NEXT ASSEMBLY

WELDING ENGINEER APPVD _____ DATE

CENTRAL FILES:

UNLESS OTHERWISE SPECIFIED

DIMENSIONS ARE IN INCHES
MACHINE SURFACES 32

BREAK SHARP EDGES .005/.020

TOLERANCES NON-CUMULATIVE

DECIMAL-INCH		FRACTIONS	
.X	±.100	0°-12°	±1/16
.XX	±.030	12°-72°	±1/8
.XXX	±.005	72°-120°	±1/4
ANGULAR	±0°-15'	OVER 120°	±1/2

PRINCETON PLASMA PHYSICS LABORATORY
PRINCETON UNIVERSITY
NATIONAL COMPACT STELLARATOR EXPERIMENT

xxx
xxx
xxx

DIV: MECH. ENG. DATE:

ENG: xxx APPROVED

DSN: xxx

CHK: CHK SUPV

S01E310005A

SHEET 1 OF 1 REV 0

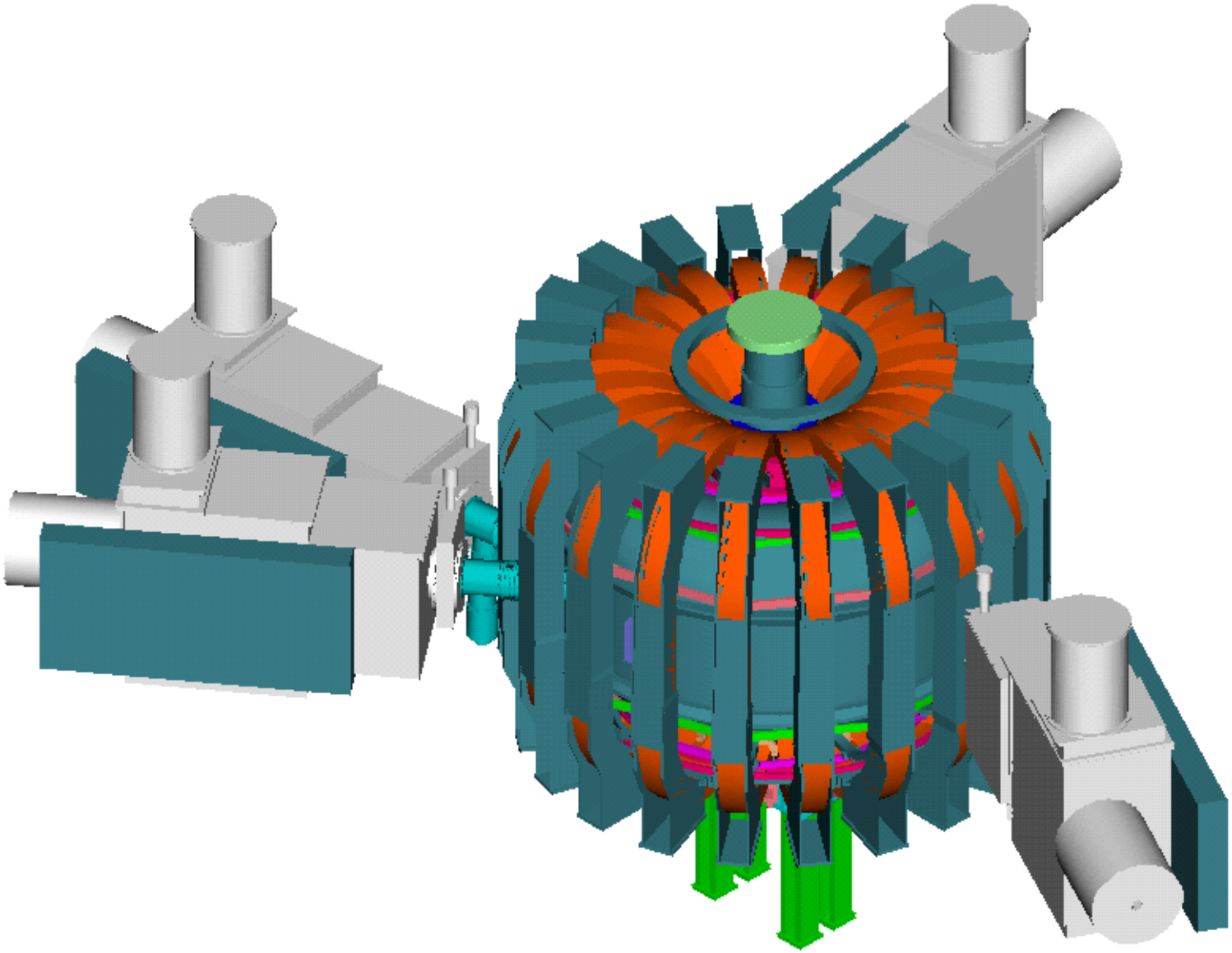

NO.	REVISION	BY	CH	SUP	APPROVED	DATE

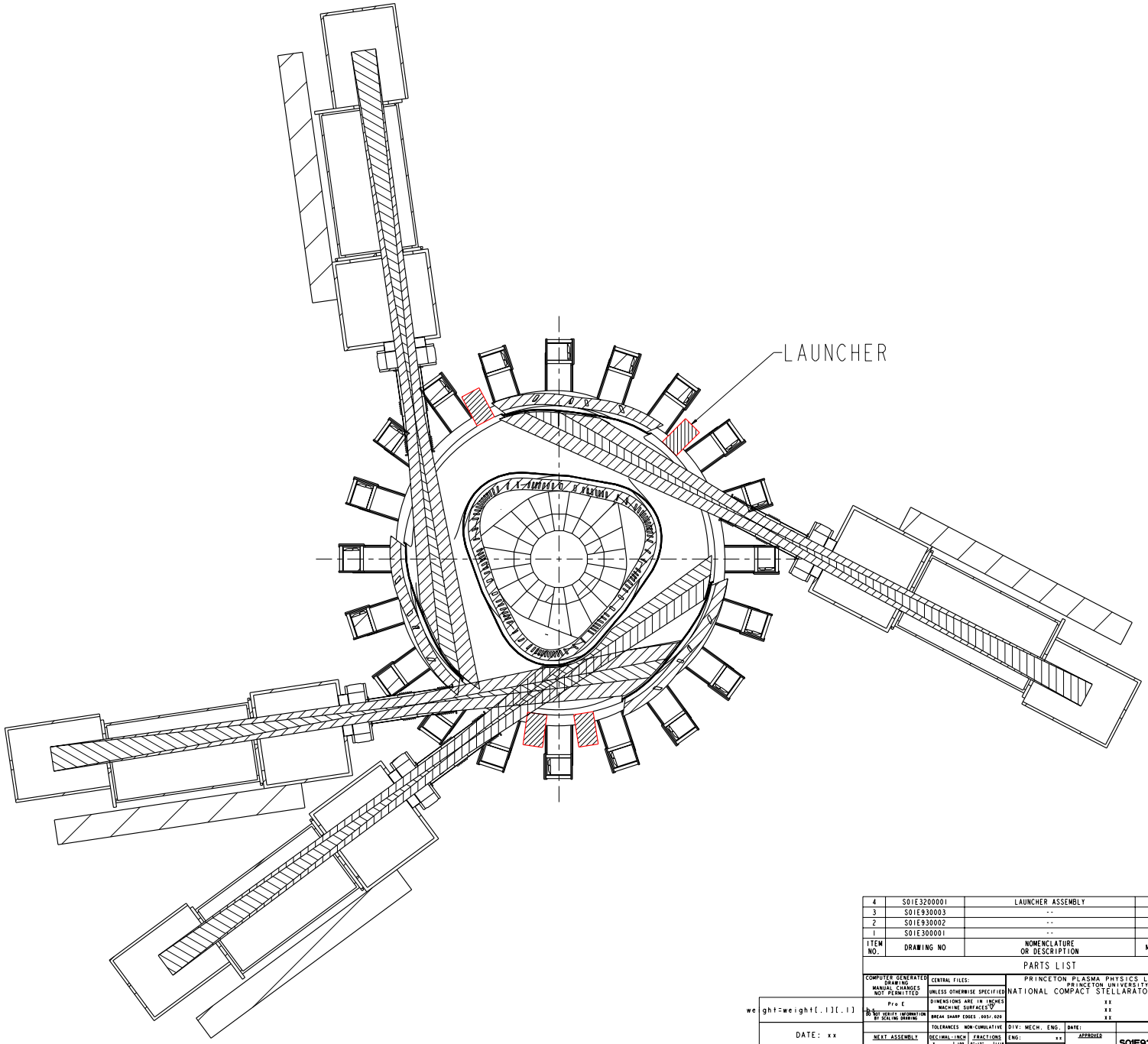

ITEM NO.	DRAWING NO	NOMENCLATURE OR DESCRIPTION	MATERIAL	QTY REQD
4	S01E320000I	LAUNCHER ASSEMBLY		1
3	S01E930003	--		1
2	S01E930002	--		1
1	S01E300001	--		1

PARTS LIST

COMPUTER GENERATED DRAWING. MANUAL CHANGES NOT PERMITTED

Pro E

DO NOT VERIFY INFORMATION BY SCALING DRAWING

weight=weight[.1][.1]

DATE: xx

NEXT ASSEMBLY

WELDING ENGINEER APPVD ____ DATE

CENTRAL FILES:

UNLESS OTHERWISE SPECIFIED

DIMENSIONS ARE IN INCHES
MACHINE SURFACES 32

BREAK SHARP EDGES .005/.020

TOLERANCES NON-CUMULATIVE

DECIMAL-INCH		FRACTIONS	
.X	±.100	0°-12°	±1/16
.XX	±.030	12°-72°	±1/8
.XXX	±.005	72°-120°	±1/4
ANGULAR	±0°-15'	OVER 120°	±1/2

PRINCETON PLASMA PHYSICS LABORATORY
PRINCETON UNIVERSITY
NATIONAL COMPACT STELLARATOR EXPERIMENT

xx
xx
xx

DIV: MECH. ENG. DATE:

ENG: xx APPROVED

DSN: xx

CHK: CHK SUPV

S01E930002-12

SHEET 1 OF 1 REV 0

EMI

S01E930002-12

NCSX CRYOSTAT ACCESS CONCEPTS

- Three concepts for the cryostat are currently being considered
  - Use old PBX-M vessel
  - Use axisymmetric fiberglass and insulation concept
  - Use conformal fiberglass and insulation concept

NO.	REVISION	BY	CH	SUP	APPROVED	DATE

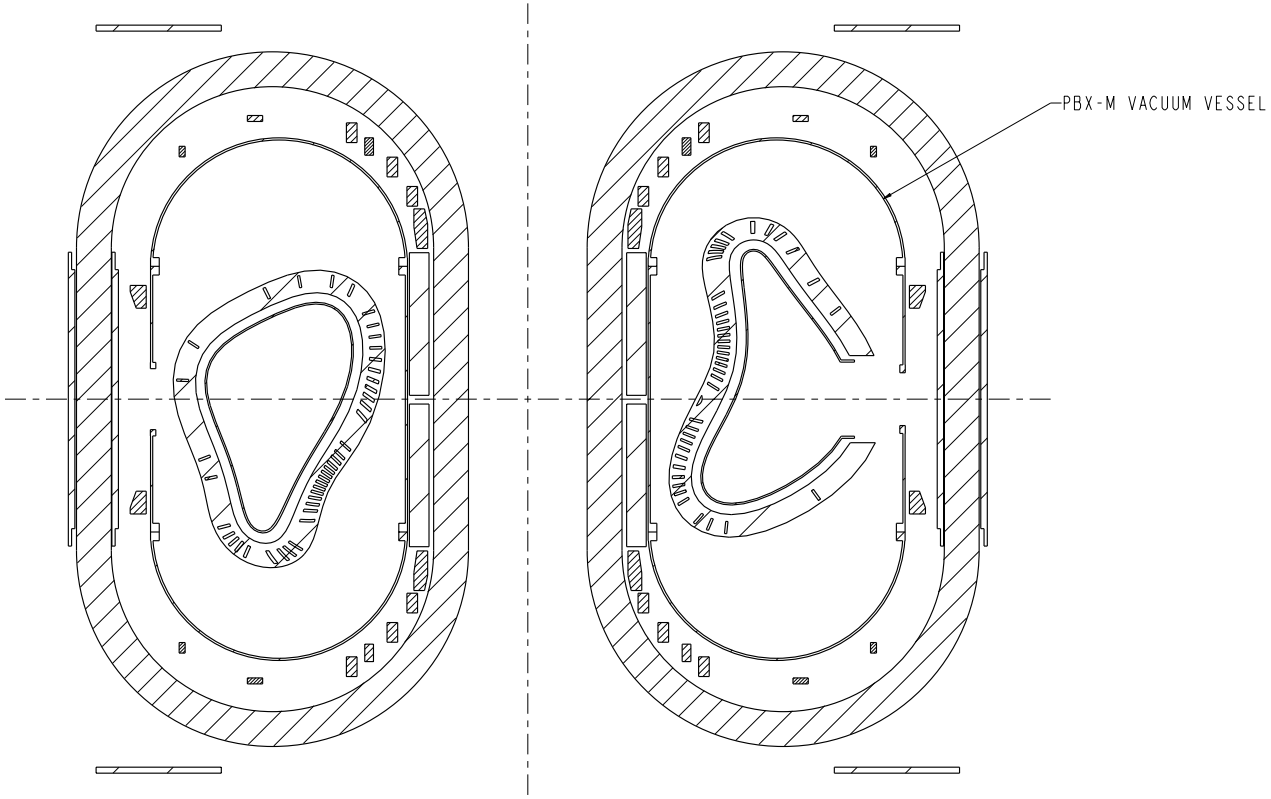

SECTION 0-0

ITEM NO.	DRAWING NO	NOMENCLATURE OR DESCRIPTION	MATERIAL	QTY REQD
3	S01E200001	TF/PF ASEMBLY		1
2	S01E930003-A	--		1
1	S01E100001-A	--		1

PARTS LIST

COMPUTER GENERATED DRAWING. MANUAL CHANGES NOT PERMITTED

Pro E

DO NOT VERIFY INFORMATION BY SCALING DRAWING

NEXT ASSEMBLY

CENTRAL FILES:

UNLESS OTHERWISE SPECIFIED

DIMENSIONS ARE IN INCHES
MACHINE SURFACES

BREAK SHARP EDGES .005/.020

TOLERANCES NON-CUMULATIVE

DECIMAL-INCH		FRACTIONS	
.X	±.100	0°-12°	±1/16
.XX	±.030	12°-72°	±1/8
.XXX	±.005	72°-120°	±1/4
ANGULAR	±0°-15'	OVER 120°	±1/2

PRINCETON PLASMA PHYSICS LABORATORY
PRINCETON UNIVERSITY
NATIONAL COMPACT STELLARATOR EXPERIMENT
NCSX
PF AND TF COILS
XX

DIV: MECH. ENG. DATE:

ENG: XX APPROVED

DSN: XX

CHK: CHK SUPV

S01E930003-A

SHEET 1 OF 1 REV 0

weight=weight[.1][.1]

DATE: XX

WELDING ENGINEER
APPVD DATE

S01E930003-A

NO.	REVISION	BY	CH	SUP	APPROVED	DATE

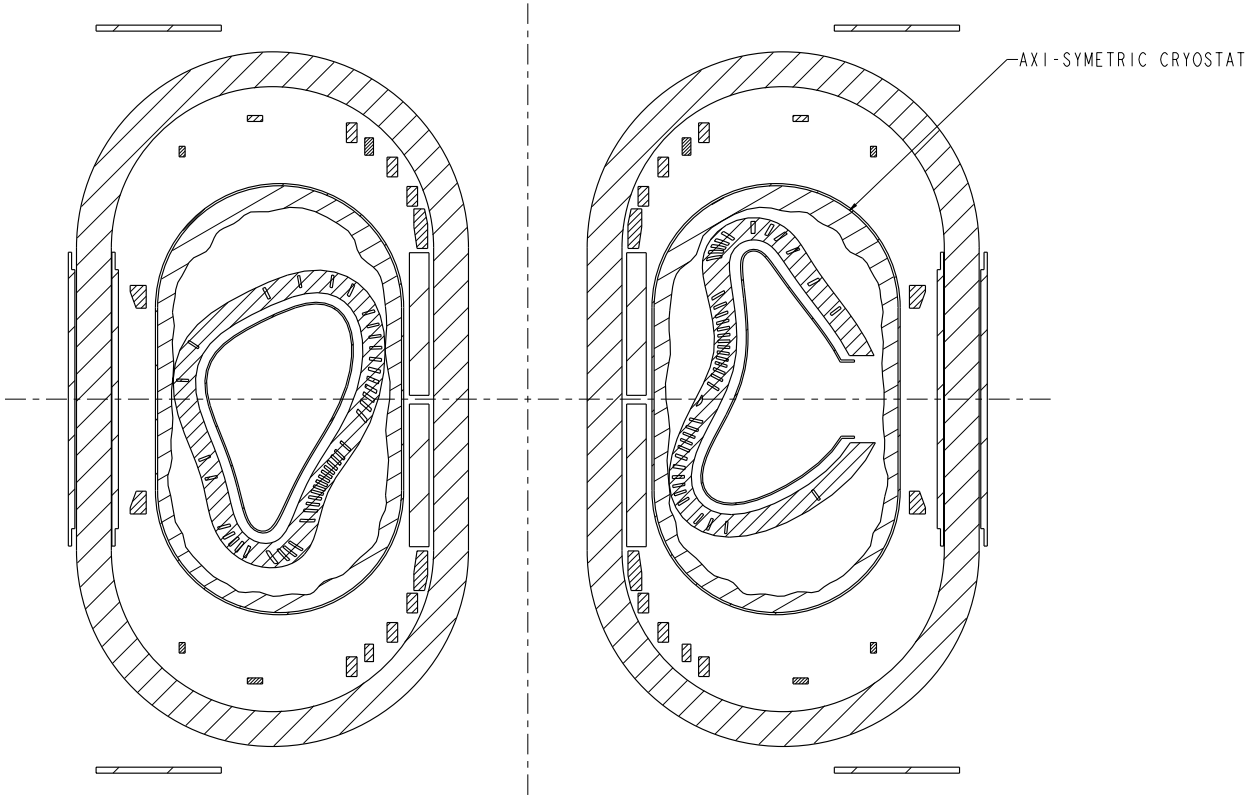

SECTION 0-0

ITEM NO.	DRAWING NO	NOMENCLATURE OR DESCRIPTION	MATERIAL	QTY REQD
3	S01E200001	TF/PF ASEMBLY		1
2	S01E930003	--		1
1	S01E100001	--		1

PARTS LIST

COMPUTER GENERATED DRAWING - MANUAL CHANGES NOT PERMITTED

Pro E

DO NOT VERIFY INFORMATION BY SCALING DRAWING

weight=weight[.1][.1]

DATE: XX

NEXT ASSEMBLY

WELDING ENGINEER

APPVD _____ DATE

CENTRAL FILES:

UNLESS OTHERWISE SPECIFIED

DIMENSIONS ARE IN INCHES

MACHINE SURFACES 32

BREAK SHARP EDGES .005/.020

TOLERANCES NON-CUMULATIVE

DECIMAL-INCH		FRACTIONS	
.X	±.100	0°-12°	±1/16
.XX	±.030	12°-72°	±1/8
.XXX	±.005	72°-120°	±1/4
ANGULAR	±0°-15'	OVER 120°	±1/2

PRINCETON PLASMA PHYSICS LABORATORY
PRINCETON UNIVERSITY
NATIONAL COMPACT STELLARATOR EXPERIMENT
NCSX
PF AND TF COILS
XX

DIV: MECH. ENG. DATE:

ENG: XX APPROVED

DSN: XX

CHK: CHK SUPV

S01E930003

SHEET 1 OF 1 REV 0

EMI

S01E930003

NO.	REVISION	BY	CH	SUP	APPROVED	DATE

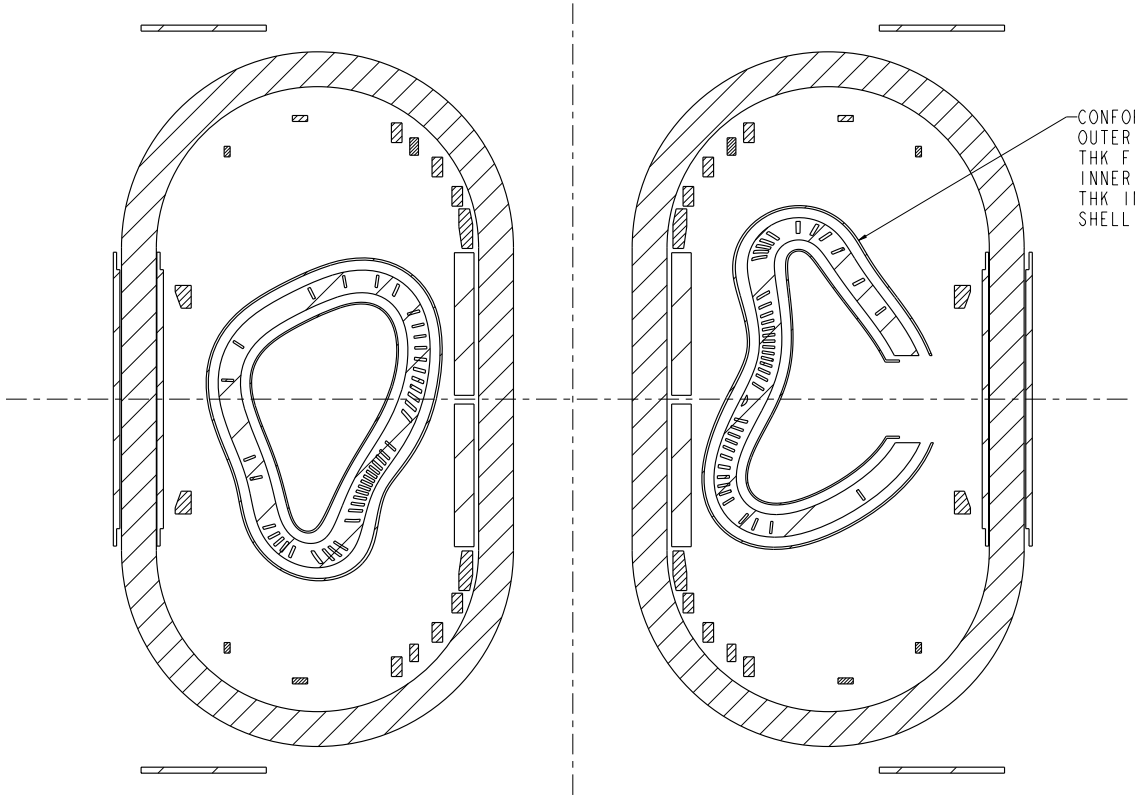

SECTION 0-0

ITEM NO.	DRAWING NO	NOMENCLATURE OR DESCRIPTION	MATERIAL	QTY REQD
4	S01E200001	TF/PF ASEMBLY		1
3	S01E930003-B	--		1
2	S01E100001-A	--		1
1	S01E140002	conformed cryostat	--	1

PARTS LIST

COMPUTER GENERATED DRAWING. MANUAL CHANGES NOT PERMITTED

Pro E

DO NOT VERIFY INFORMATION BY SCALING DRAWING

weight=weight[.1][.1]

DATE: XX

WELDING ENGINEER APPVD _____ DATE

NEXT ASSEMBLY

CENTRAL FILES:

UNLESS OTHERWISE SPECIFIED

DIMENSIONS ARE IN INCHES
MACHINE SURFACES 32

BREAK SHARP EDGES .005/.020

TOLERANCES NON-CUMULATIVE

DECIMAL-INCH		FRACTIONS	
.X	±.100	0°-12°	±1/16
.XX	±.030	12°-72°	±1/8
.XXX	±.005	72°-120°	±1/4
ANGULAR	±0°-15'	OVER 120°	±1/2

PRINCETON PLASMA PHYSICS LABORATORY
PRINCETON UNIVERSITY
NATIONAL COMPACT STELLARATOR EXPERIMENT
NCSX
PF AND TF COILS
XX

DIV: MECH. ENG. DATE:

ENG: XX APPROVED

DSN: XX

CHK: CHK SUPV

S01E930003-B

SHEET 1 OF 1 REV 0

EMI

S01E930003-B

- PBX-M vessel
  - Advantages
    - Already exist
  - Disadvantages
    - Ports would have to be added for diagnostics
    - Limited space between vessel and TF coil
    - Cost to modify vessel could be high
- Axisymmetric fiberglass and insulation
  - Advantages
    - Conventional fabrication shape
    - Can be built in parallel with other components
  - Disadvantages
    - More room between cryostat and TF coils but still limits access for diagnostics
- Conformal fiberglass and insulation
  - Advantages
    - More room between cryostat and TF coils then PBX-M or axisymmetric case
  - Disadvantages
    - Fabrication is in series with other major components.

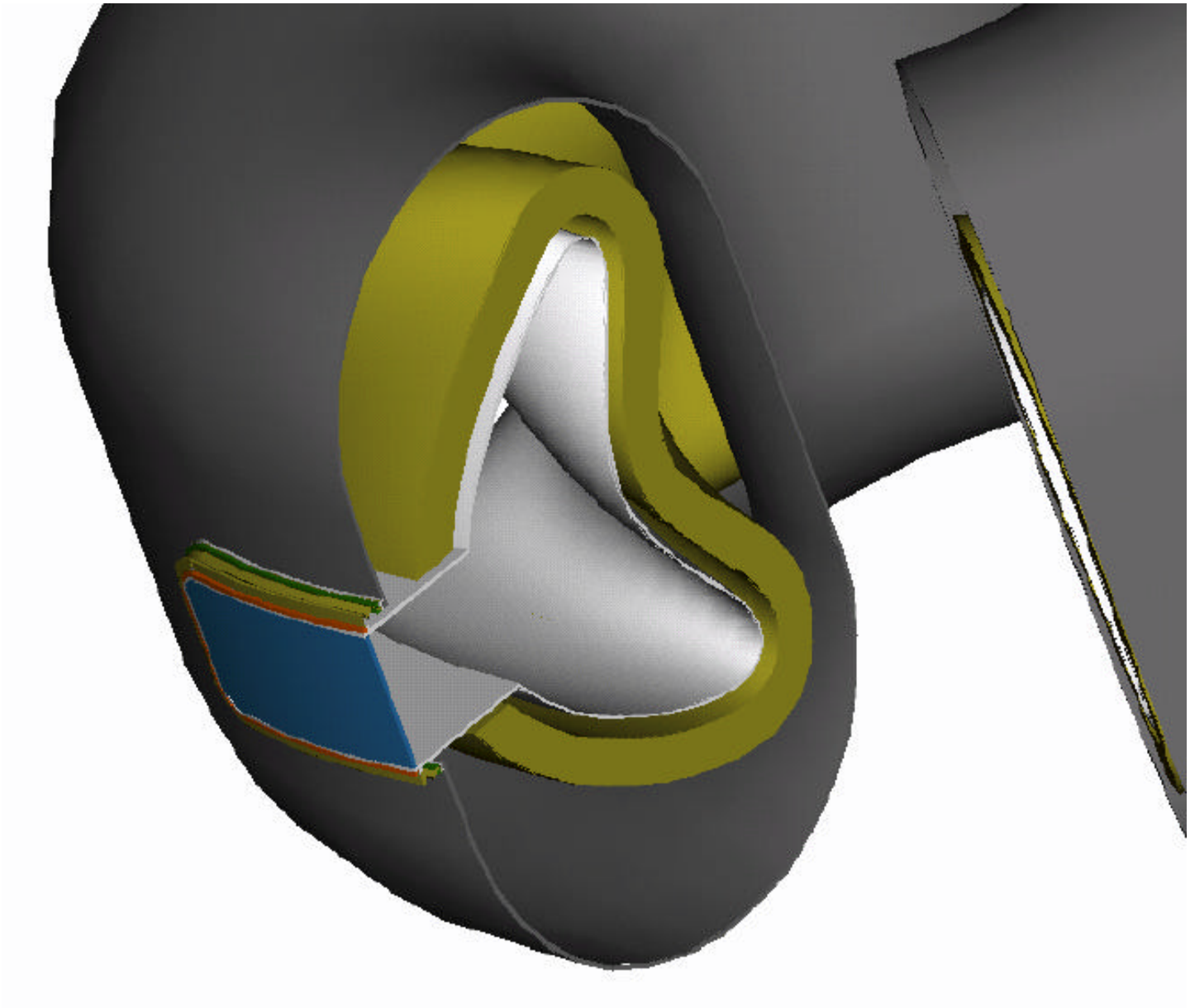

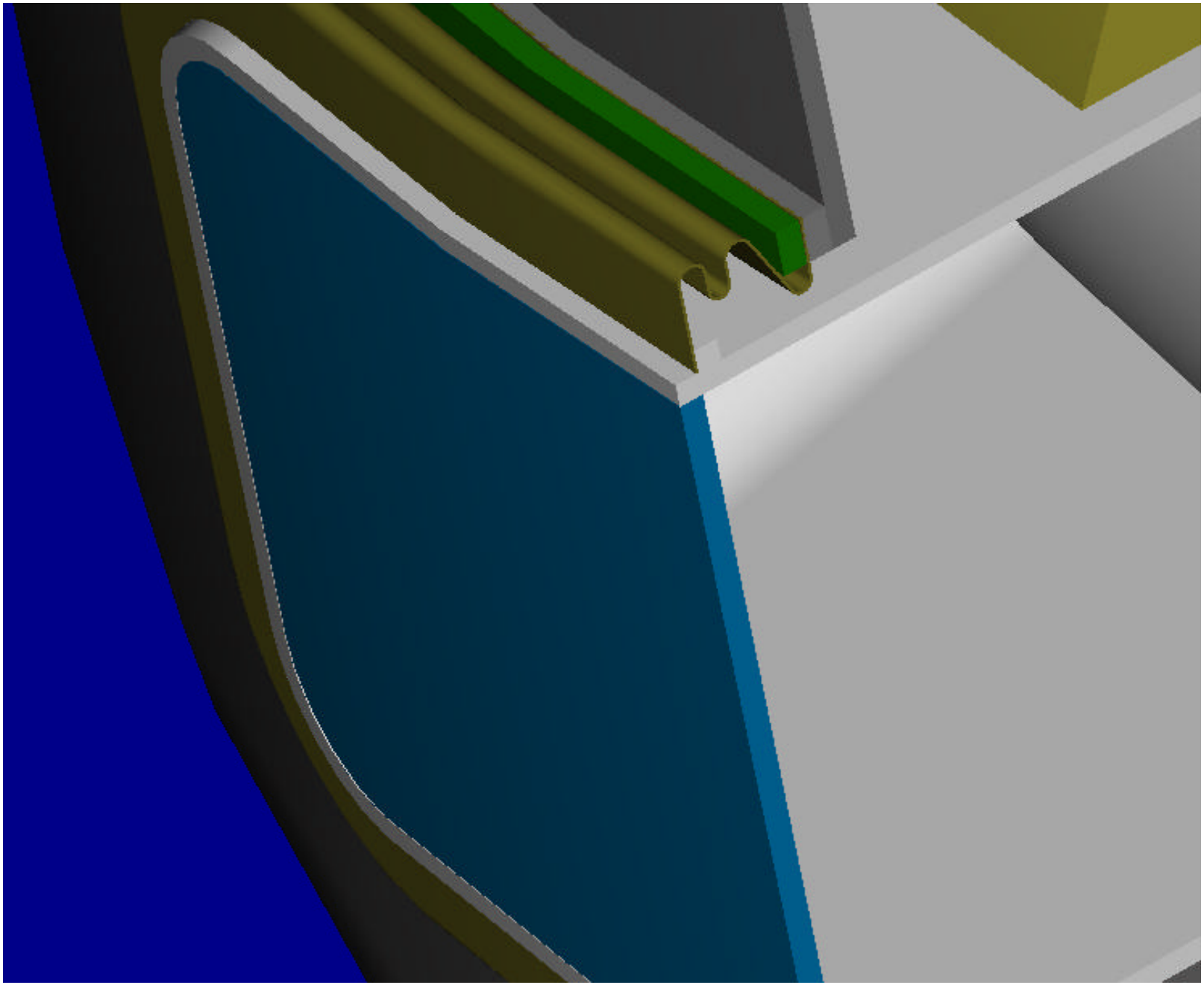

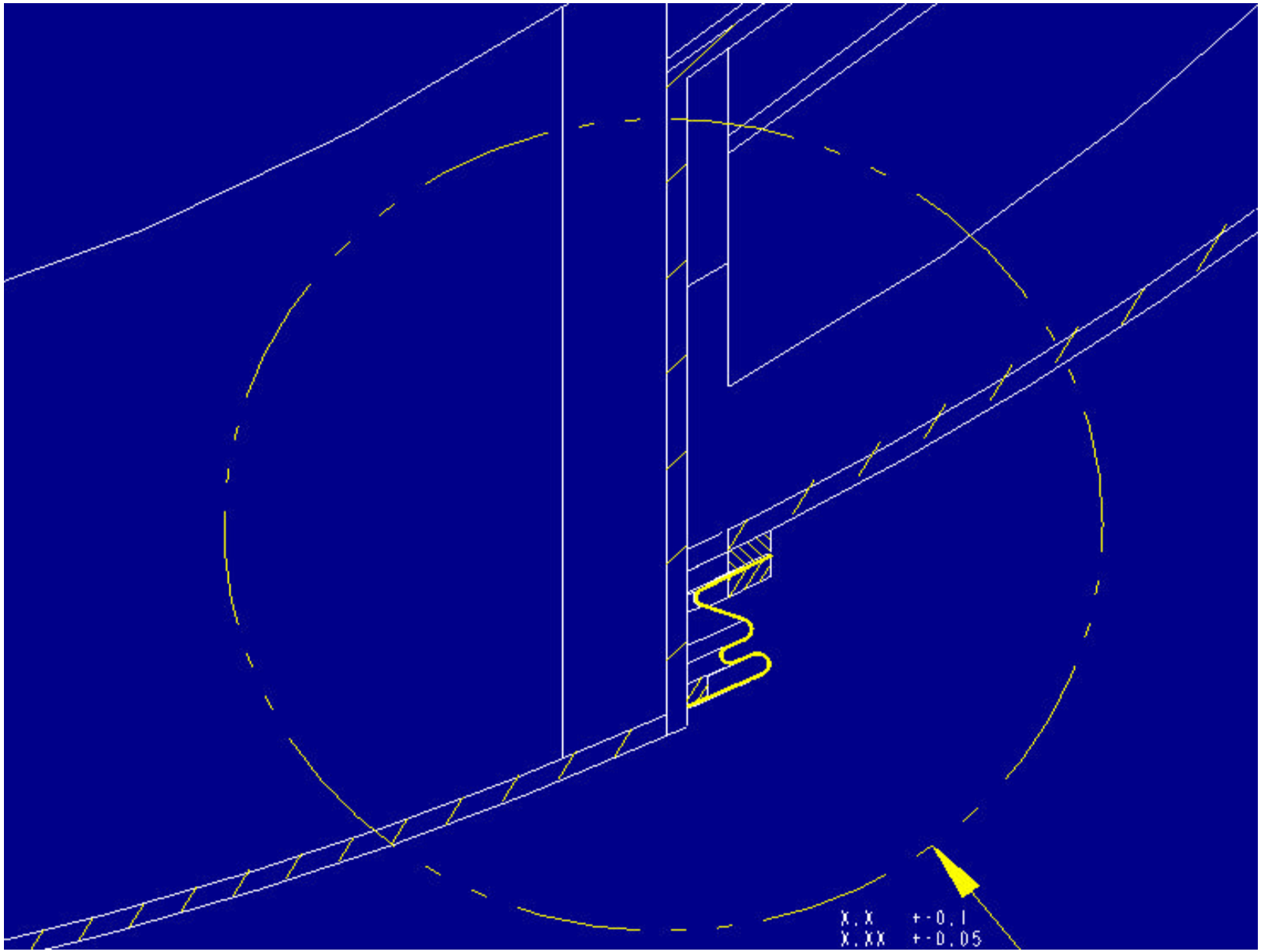
X.X +-0.1
X.XX +-0.05

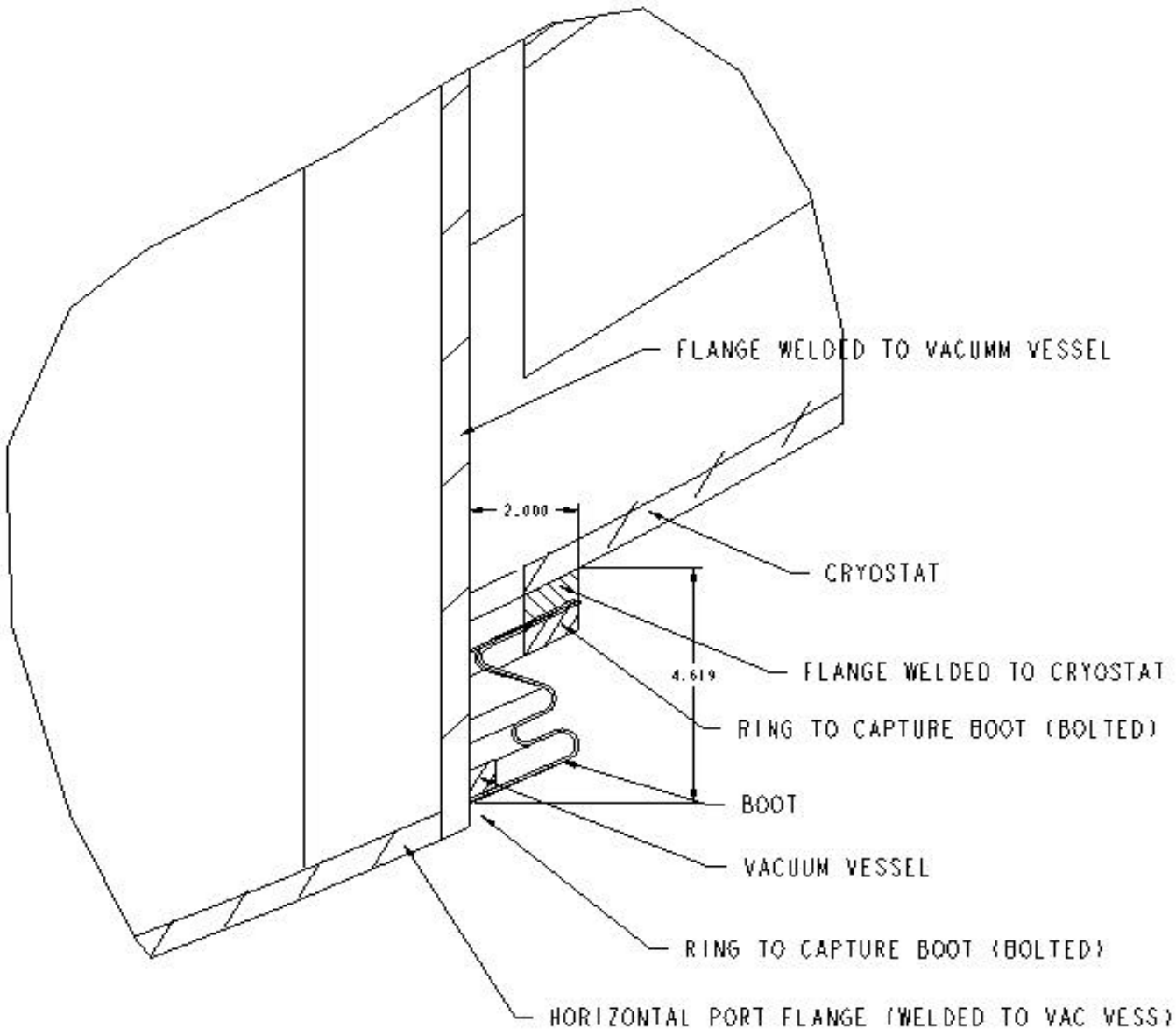
FLANGE WELDED TO VACUMM VESSEL
2.000
CRYOSTAT
4.619
FLANGE WELDED TO CRYOSTAT
RING TO CAPTURE BOOT (BOLTED)
BOOT
VACUUM VESSEL
RING TO CAPTURE BOOT (BOLTED)
HORIZONTAL PORT FLANGE (WELDED TO VAC VESS)

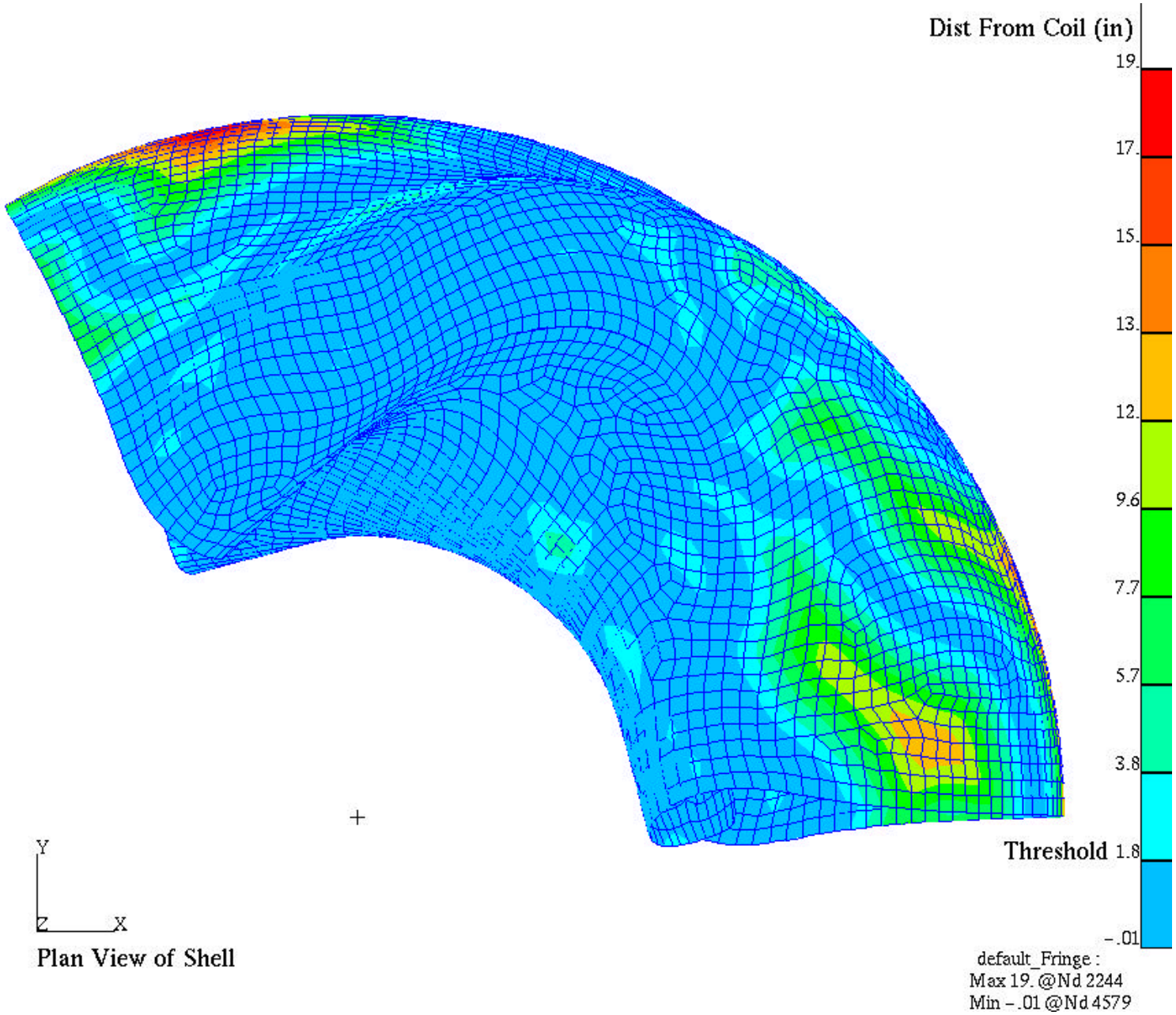

Plan View of Shell

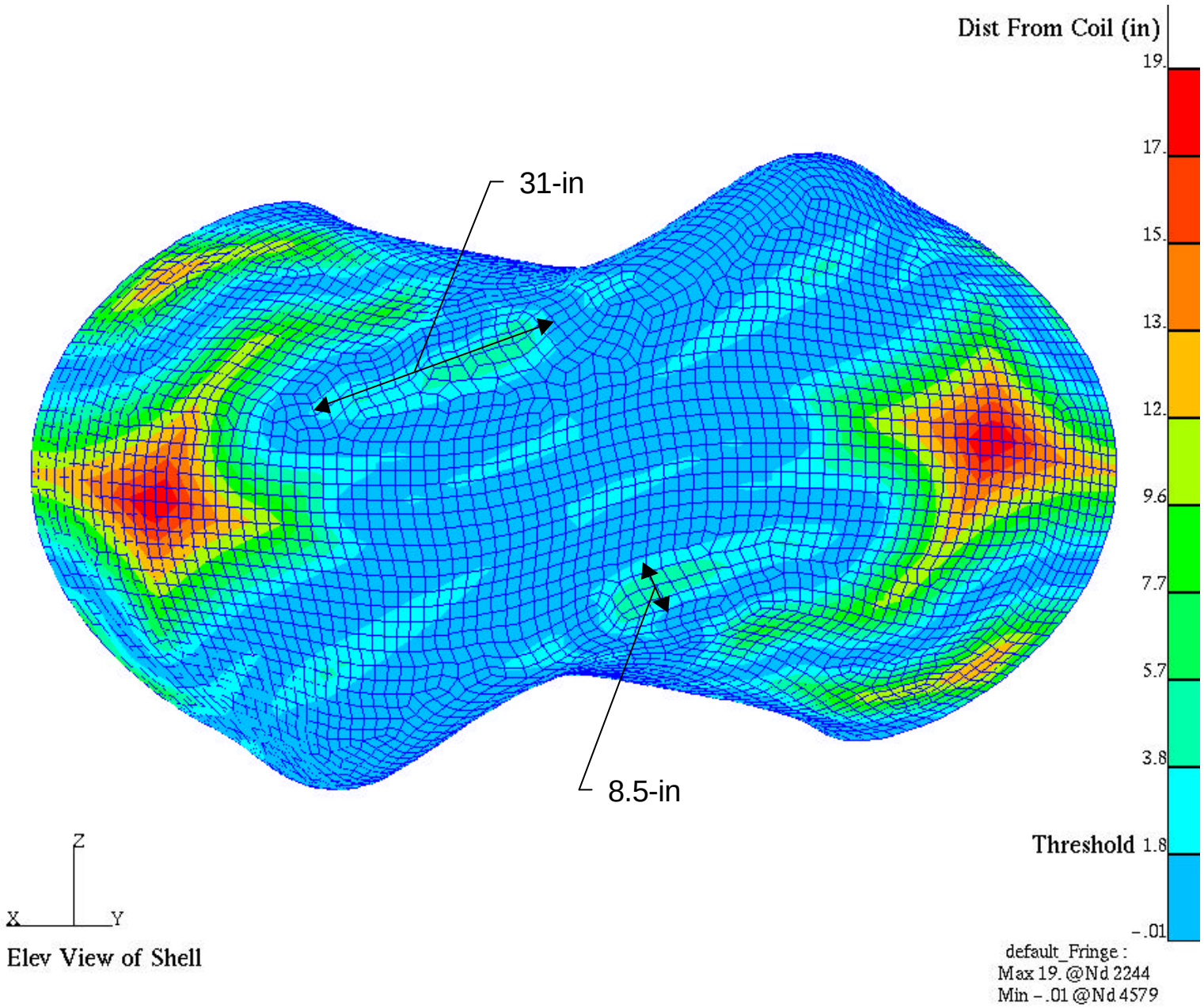
Dist From Coil (in)
19.
17.
15.
13.
12.
9.6
7.7
5.7
3.8
Threshold 1.8
-.01
31-in
8.5-in
Z
X
Y
Elev View of Shell
default_Fringe :
Max 19. @Nd 2244
Min -.01 @Nd 4579

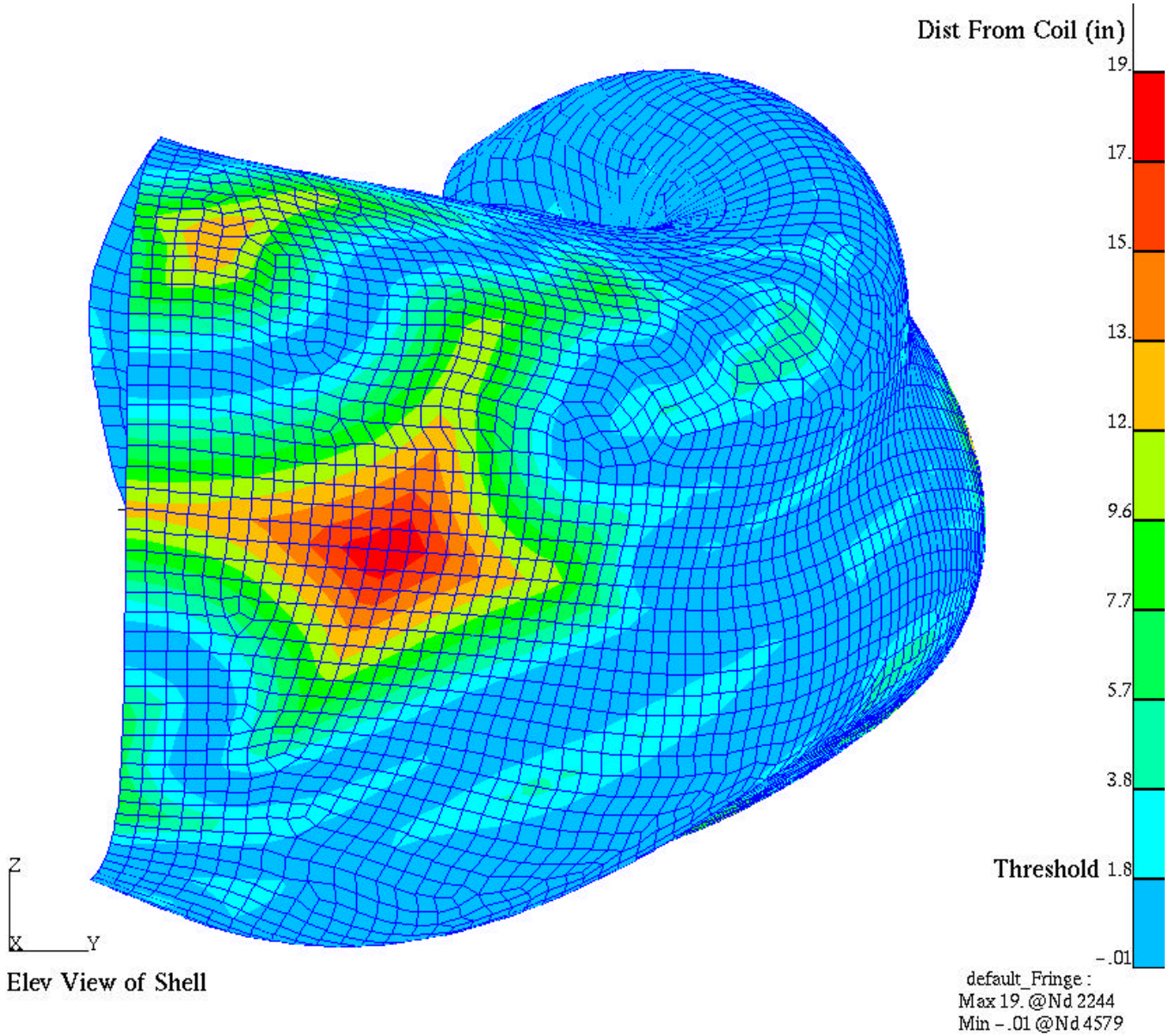
Dist From Coil (in)
19.
17.
15.
13.
12.
9.6
7.7
5.7
3.8
Threshold 1.8
-.01
default_Fringe :
Max 19. @Nd 2244
Min -.01 @Nd 4579
Z
X
Y
Elev View of Shell

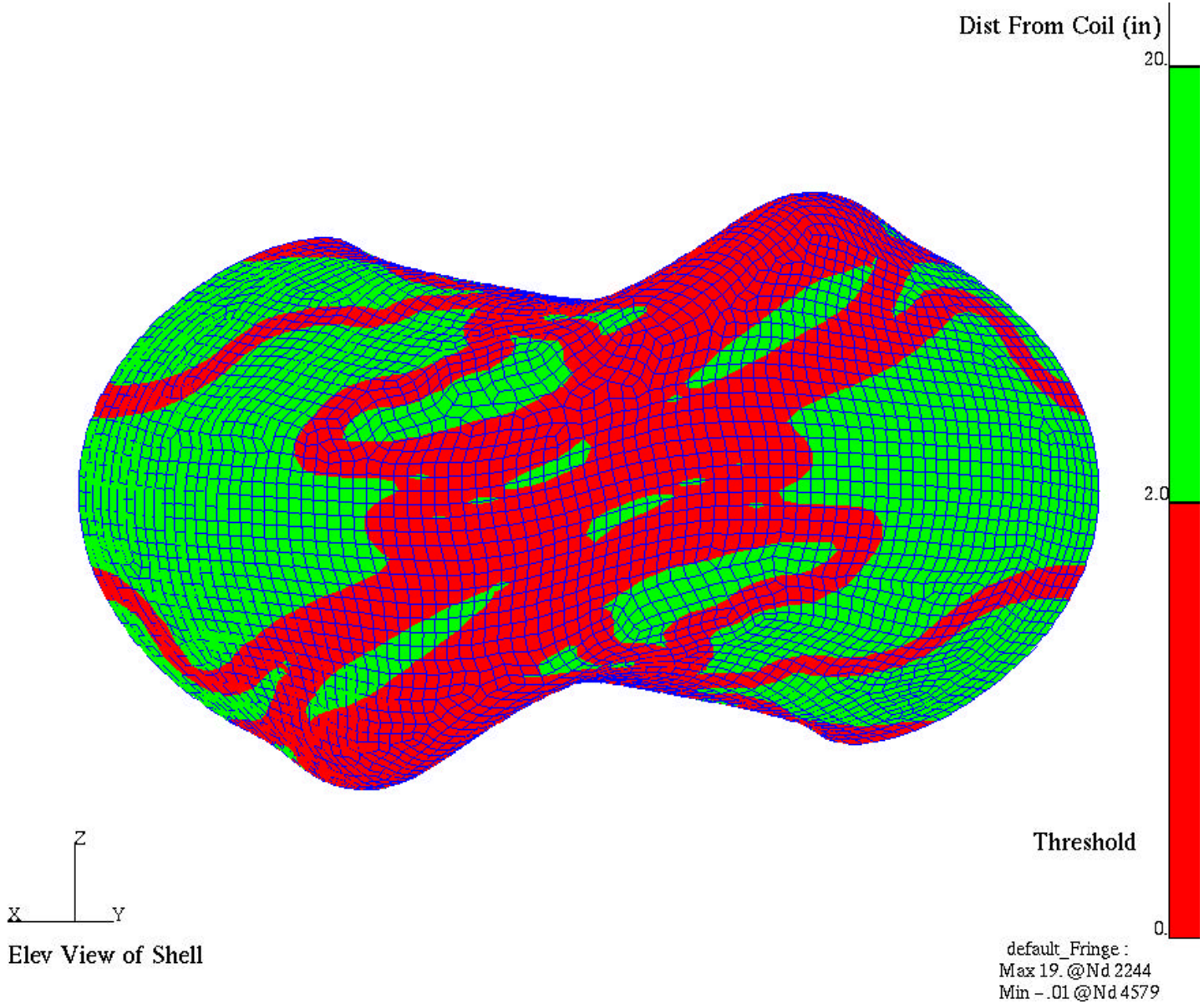
Dist From Coil (in)
20.
2.0
0.
Threshold
default_Fringe :
Max 19. @Nd 2244
Min -.01 @Nd 4579
Z
X
Y
Elev View of Shell

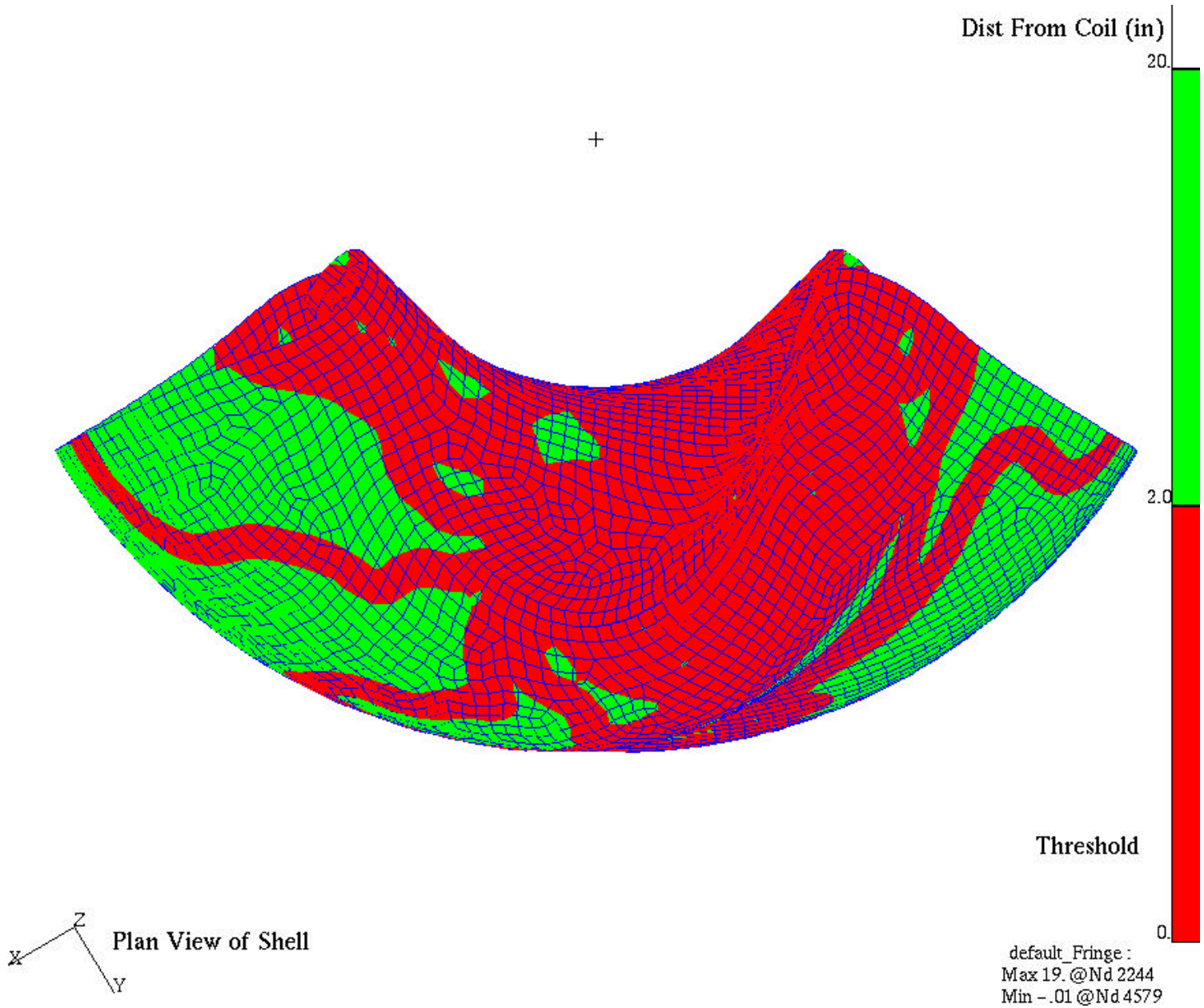
Dist From Coil (in)
20.
2.0
0.
Threshold
Z
X
Y
Plan View of Shell
default_Fringe :
Max 19. @Nd 2244
Min -.01 @Nd 4579

Table 1 - Summary of Diagnostic Port Needs on NCSX
Preliminary Assessment
(Table from Dave Johnson's report)

diagnostic	#ports	size	comments
in-vessel sensors	30	2.75	location dependent on method for mounting sensors, protecting leads
visible cameras	3	6	assumes retractable periscopes for inspection, top best
IR cameras	6	4.5	provide sightlines to limiter, divertor regions, RF antenna, NB armor
interferometer	2	4.5	opposing on line through core will use commercial flapper shutter
x-ray imaging arrays	12	6	part of "tomagraphy" complement
VB array	1	6	part of "tomagraphy" complement
	1	2.75	will use commercial flapper shutter
bolometer arrays	3	6	part of "tomagraphy" complement
VIPS, SPRED, filterscopes	4	6	part of "tomagraphy" complement will use commercial flapper shutter
CHERS/MSE	1	10	shares large miplane slot with NB
	2	2.75	for shutter drive
BES	1	10	shares large miplane slot with NB
	2	2.75	for shutter drive
poloidal CHERS	2	4x10	racetrack shape above/below NB
	2	2.75	for shutter drive
Thomson Scattering	1	2.75	outer midplane, oblate sym. plane
	1	10	top or midplane
	1	2.75	for shutter drive
ECE	2	8	outer midplane, symmetry plane
reflectometry	2	8	outer midplane, symmetry plane
x-ray PHA	1	6	horiz. or vert. flt. tube out of TF
NPA	1	6	horiz. or vert. flt. tube out of TF
fast ion loss probe	1	6	needs clear path to outside of TF
fast scanning probe	1	6	needs clear path to outside of TF
future needs	8	2.75	initially blanked
	4	4.5	part of "tomagraphy" complement
	4	6	initially blanked
	2	8	initially blanked
	2	10	initially blanked

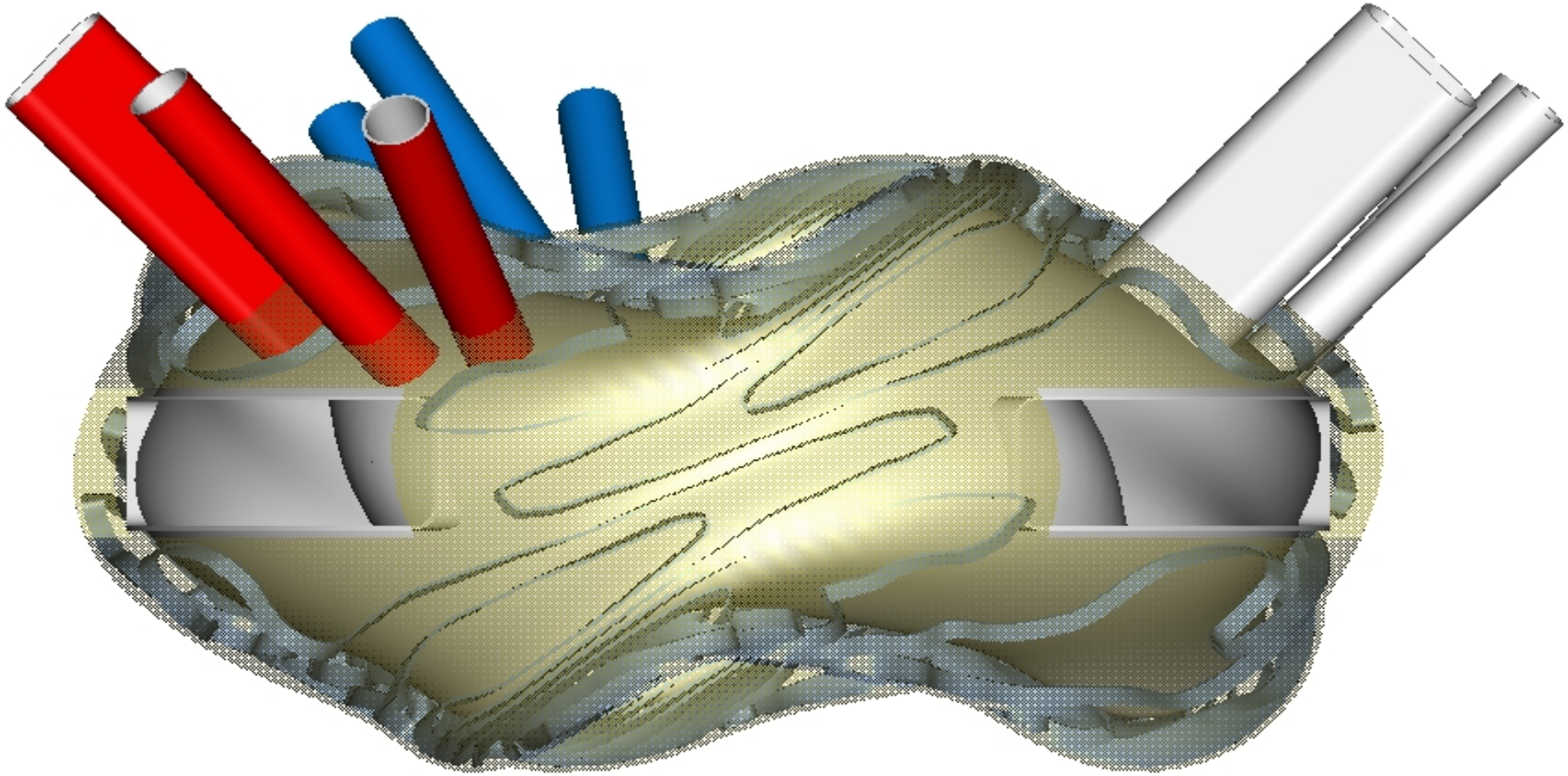

PRELIMINARY DIAGNOSTIC PORT WISH LIST PER D. JOHNSON

NUMBER OF PORTS	SIZE	PURPOSE	ATTRIBUTES
47	2.75”	See DJ Report	See DJ Report
12	4.5”	See DJ Report	See DJ Report
31	6”	See DJ Report	See DJ Report
6	8”	See DJ Report	See DJ Report
7	10”	See DJ Report	See DJ Report
2	4” x 10”	See DJ Report	See DJ Report
105 total			

PRELIMINARY HEATING PORT SUMMARY

NUMBER OF PORTS	SIZE	PURPOSE	ATTRIBUTES
4	12” X 14”	NBI	Tangent to 1.5 m
4	44cm x 24 cm x40 cm	ICH	TBD
TBD	TBD	LH	TBD
TBD	TBD	ECH	TBD

ANCILIARY PORT SUMMARY

NUMBER OF PORTS	SIZE	PURPOSE	ATTRIBUTES
4	10”	Vacuum pumping	Big enough to evacuate torus without using NBI
TBD	TBD	Fueling	TBD
1	TBD	Maintenance	Big enough for a large Ferret