NCSX Teleconference Project Meeting
March 23-24, 2000

NCSX Machine Design - Access

ORNL
M. J. Cole, K. W. Buchanan, P. L. Goranson,
B. E. Nelson, and D.E. Wilamson
PPPL
H.W. Kugel, D. W. Johnson, P. Heitzenroeder
March 24, 2000

NCSX Machine Design – Agenda

- Assumptions
- Neutral Beams
- Vacuum Pumping
- RF Heating
- Diagnostics
- Summary

Machine Design – Assumptions

- This presentation covers access for Neutral Beams, RF Heating, Vacuum Pumping and Diagnostics.
- Access has been based using the existing PBX-M device, including all 20 TF coils.
- The stellarator core is based on the C82-FD121-16 saddle coil set.
- Diagnostic requirements are based on the memo issued by Dave Johnson, "Preliminary Assessment of Diagnostic Access Needs on NCSX"

Machine Design – Neutral Beams

- There are 4 PBX-M neutral beams located in the co-direction at a tangency of 1.5m

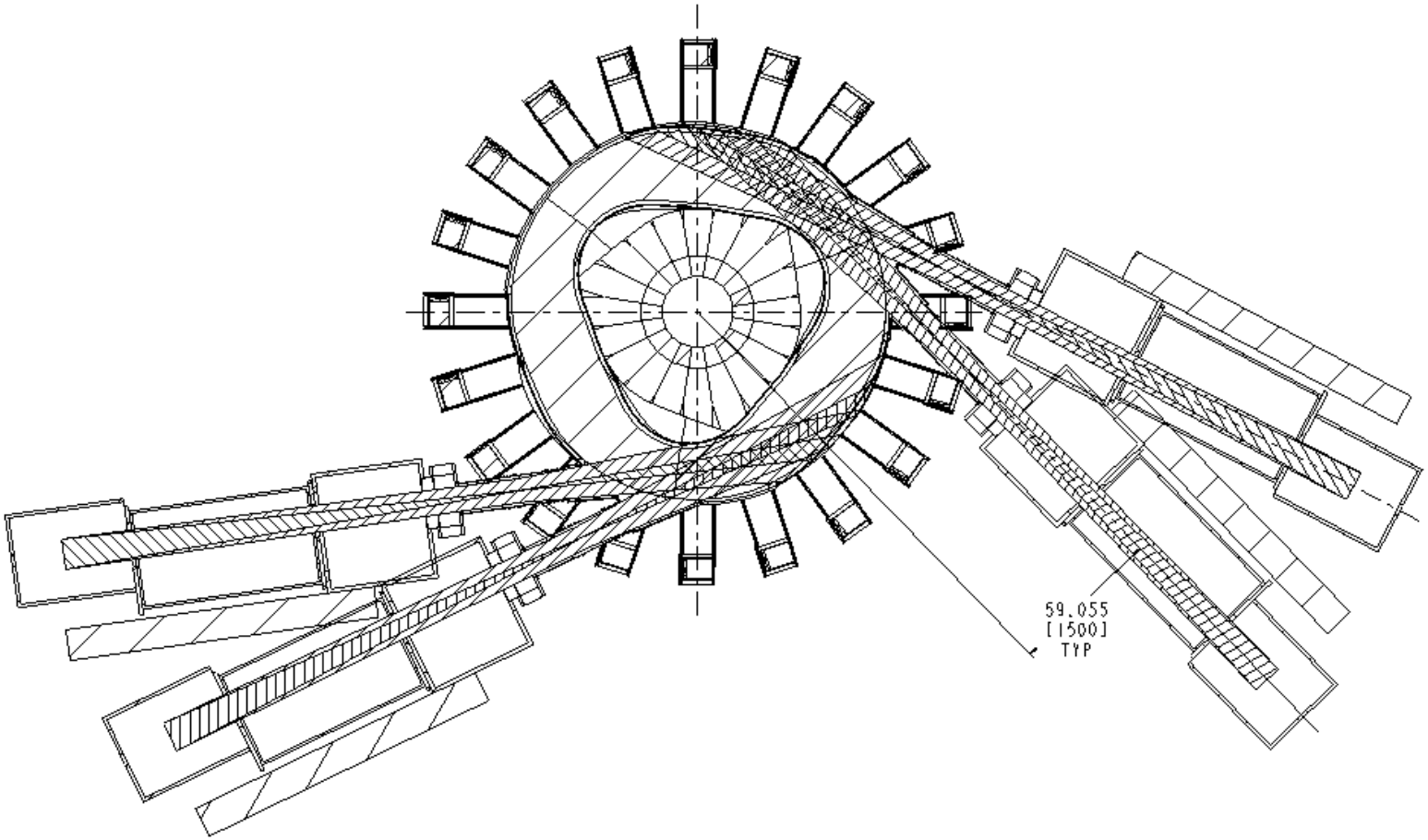

Machine Design – Neutral Beams (con't)

Primary issues affecting the neutral beams:

- Interference with the front end of the vacuum enclosure.

- Interference between the TF coils and the neutral beam drift duct.

Machine Design – Neutral Beams (con't)

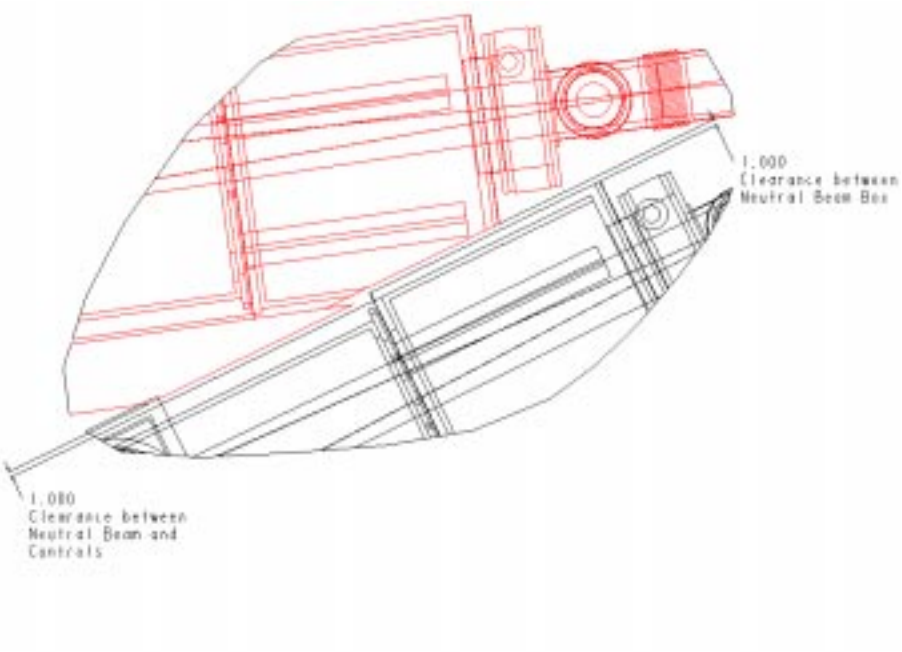

Neutral Beam Enclosure Interference

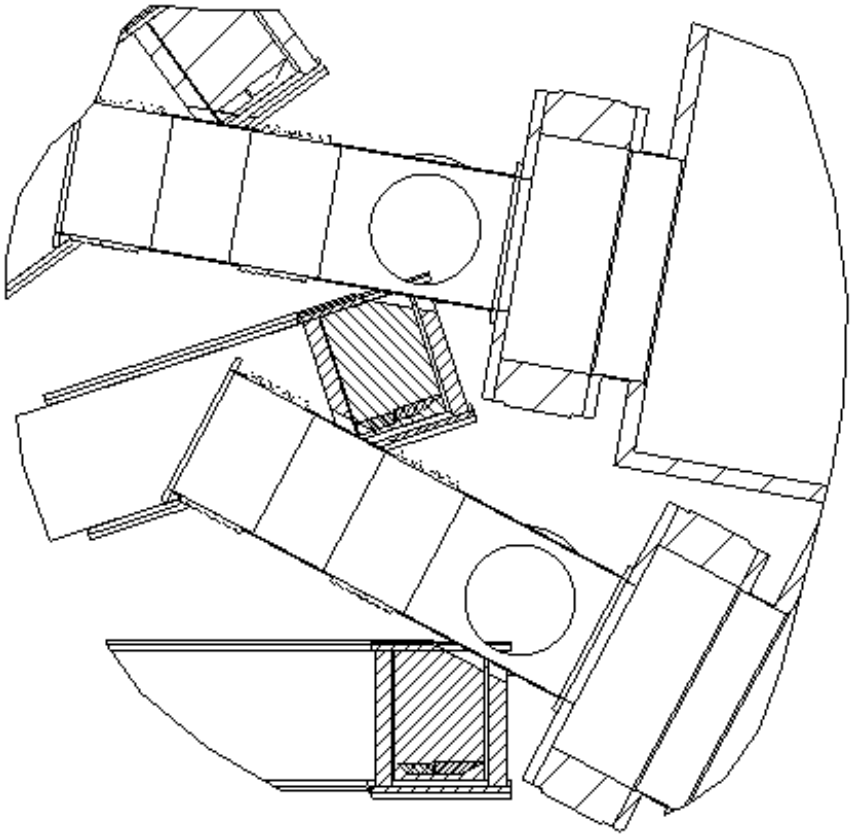

TF coil and NB Interference

Machine Design – Vacuum Pumping

Requirements:

- Add a 1500 l/s turbomolecular pump between neutral beam enclosure and vacuum vessel.
- Increase neutral beam drift duct cross section for improved pumping.
- Cryo pump to be added to the front end of the neutral beam enclosure.

Machine Design – Vacuum Pumping (con't)

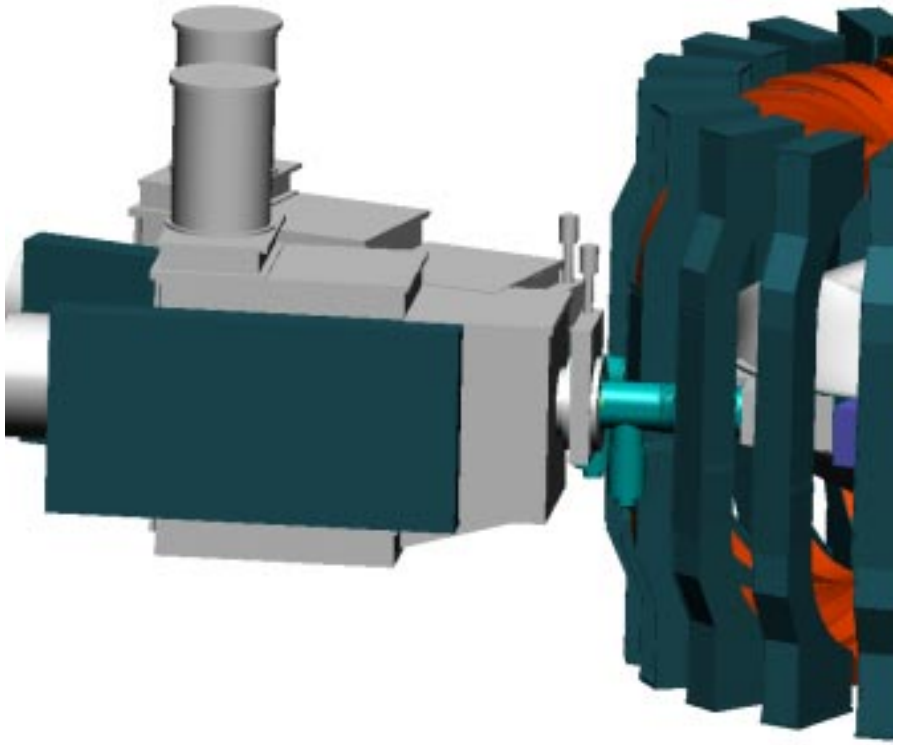

Pumping Access

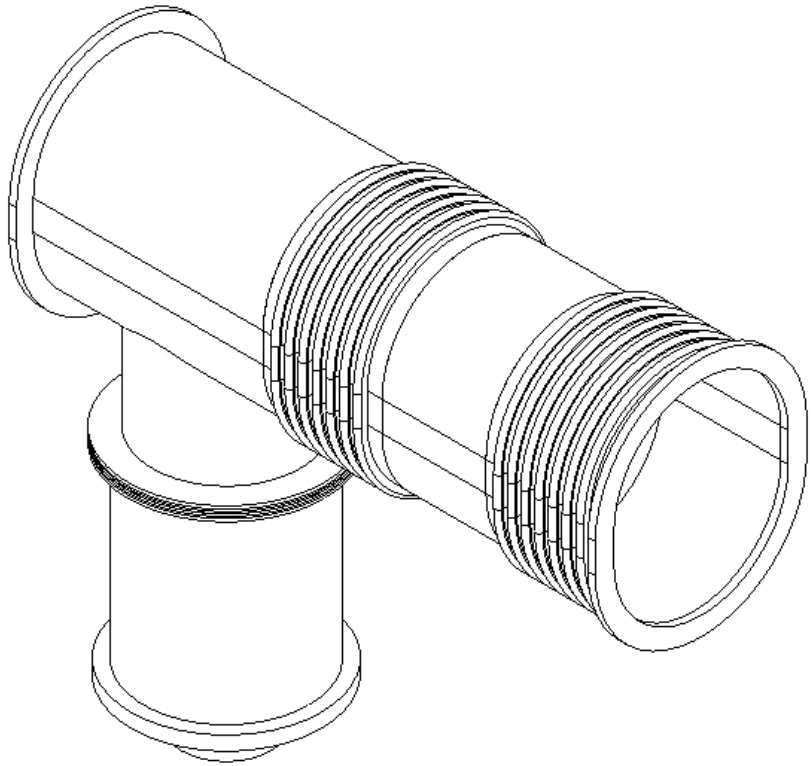

Neutral Beam Drift Duct

Machine Design – RF Heating

Requirements:

- Each launcher will require access between the TF coils for coax connections and maintenance.
- Approximate dimensions are shown below.

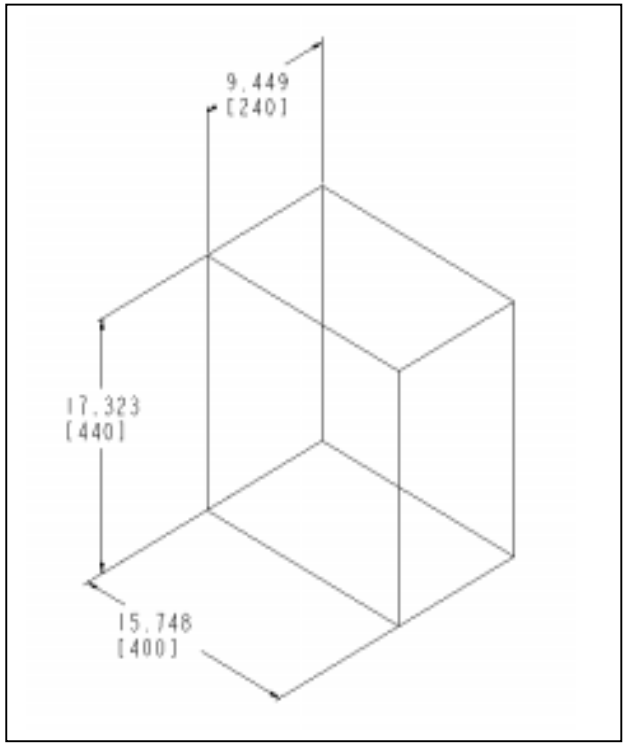

Issues:

- The height of the launcher is 17.323 in(440) which slightly exceeds the opening in the vacuum vessel, 17.0 in(431.8).

Machine Design – RF Heating (con't)

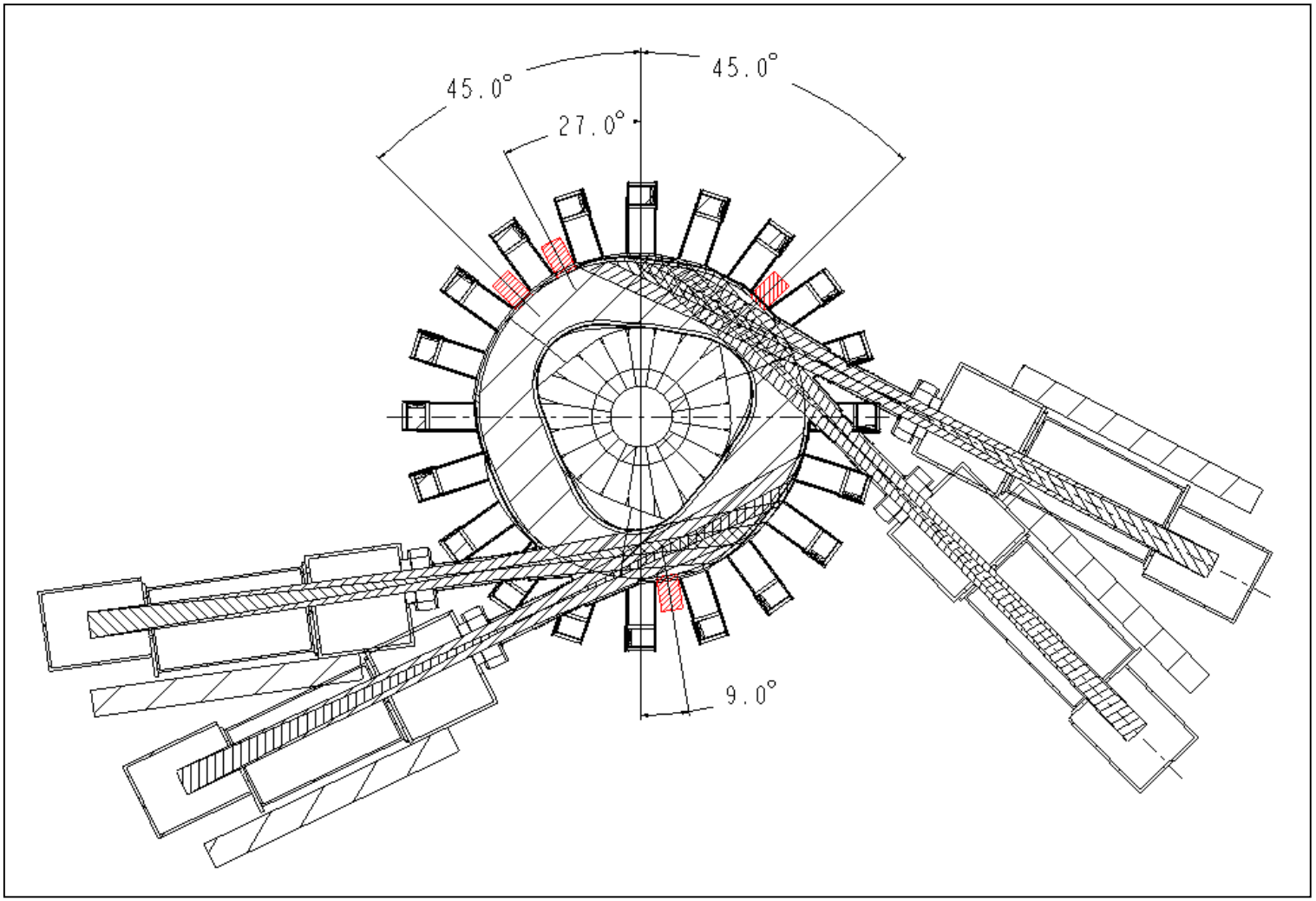

Machine Design – Diagnostics

Requirements:

- Dave Johnson's memo dated January 5, 2000, "Preliminary Assessment of Diagnostic Access Needs on NCSX", has been used to determine locations and sizes of ports.
- The following diagnostics will be discussed:
  - Visible and IR Cameras
  - Microwave Interferomenter
  - Poloidal Tomagraphy
  - Thompson Scattering
  - x-ray PHA and Neutral Particle Analyzer
  - Scannable Probes
- The following diagnostics have not been addressed:

Machine Design – Diagnostics (con't)

- ECE Diagnostics and Reflectometry
- Neutral Beam Spectroscopy
- Future Reserve

Machine Design – Diagnostics (Visible and IR Cameras)

-"**Visible and IR Cameras** Compared to tokamaks, and particularly to spherical tokamaks, seeing a given fraction of the inside of the vessel will require many more ports on NCSX, because of the high aspect ratio and the complex vessel shape. Assuming that periscopes with steerable, adjustable fields can be utilized, and that there is not a requirement to see everywhere in the vessel, I estimate that 3 - 6" ports for visible inspection would be a minimum complement. For IR camera views of limiters, divertor regions, RF antennas and NBI armor, I estimate 6 - 4.5" ports would be needed, with proper viewing geometries."

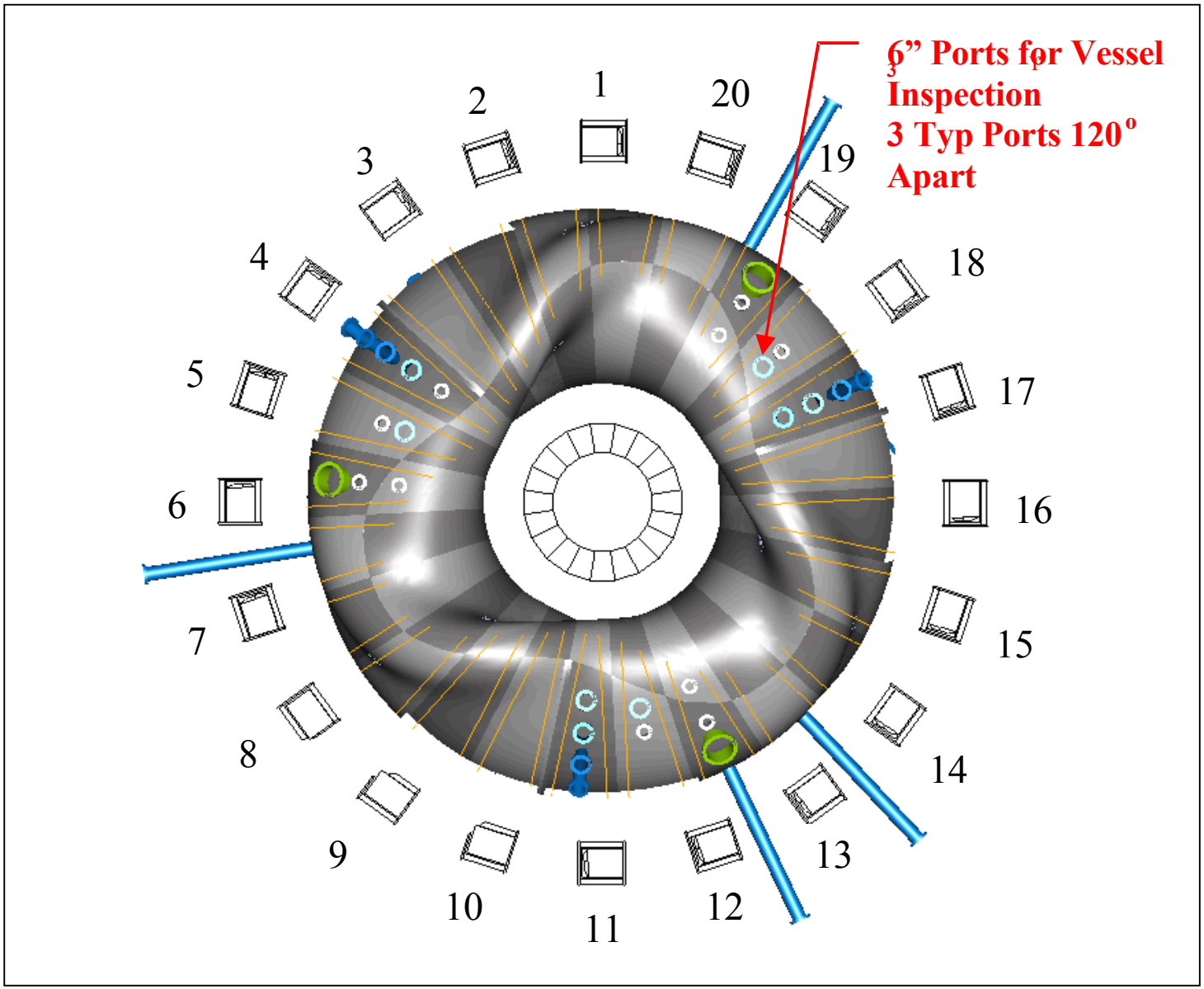
6” Ports for Vessel Inspection
3 Typ Ports 120° Apart
1
2
3
4
5
6
7
8
9
10
11
12
13
14
15
16
17
18
19
20

Machine Design – Diagnostics (Microwave Interferometer)

“Microwave Interferometer - Two 4.5” ports should be reserved for interferometry. The optimum geometry would be opposing inboard-outboard views on a line through the plasma core. However, this may not be possible because of the density of inboard coils in the shell.”

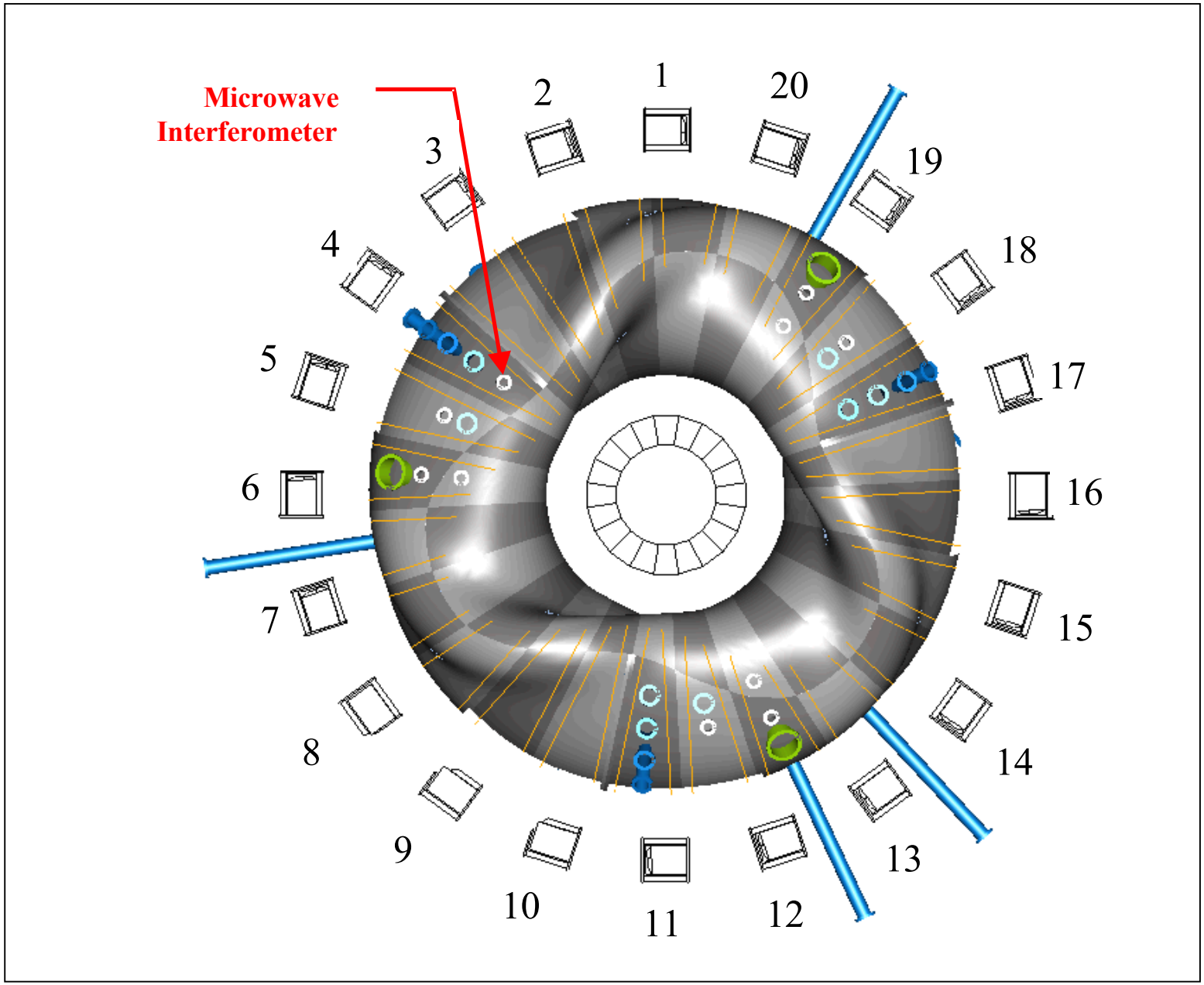
Microwave
Interferometer
1
2
3
4
5
6
7
8
9
10
11
12
13
14
15
16
17
18
19
20

Machine Design – Diagnostics (Poloidal Tomagraphy Diagnostics)

"**Poloidal Tomagraphy Diagnostics** - The need for multiple measurements in similar poloidal planes is shared by a number of diagnostics. If 2 locations could be found in each of the three toroidal periods where 4 - 6" ports could be distributed around the outer 2/3 of the perimeter of the vessel in the same poloidal plane, these tomographic requirements would be satisfied. This would be a total of 24 ports. I would allocate at least 3 of these 6 toroidal locations to **x-ray imaging** (12 ports). The remainder I would allocate to the **VB array** (1 port), **bolometry** (3 ports) and **passive spectroscopy (VIPS, SPRED, filterscopes)** (4 ports) and **future needs** (4 ports)."

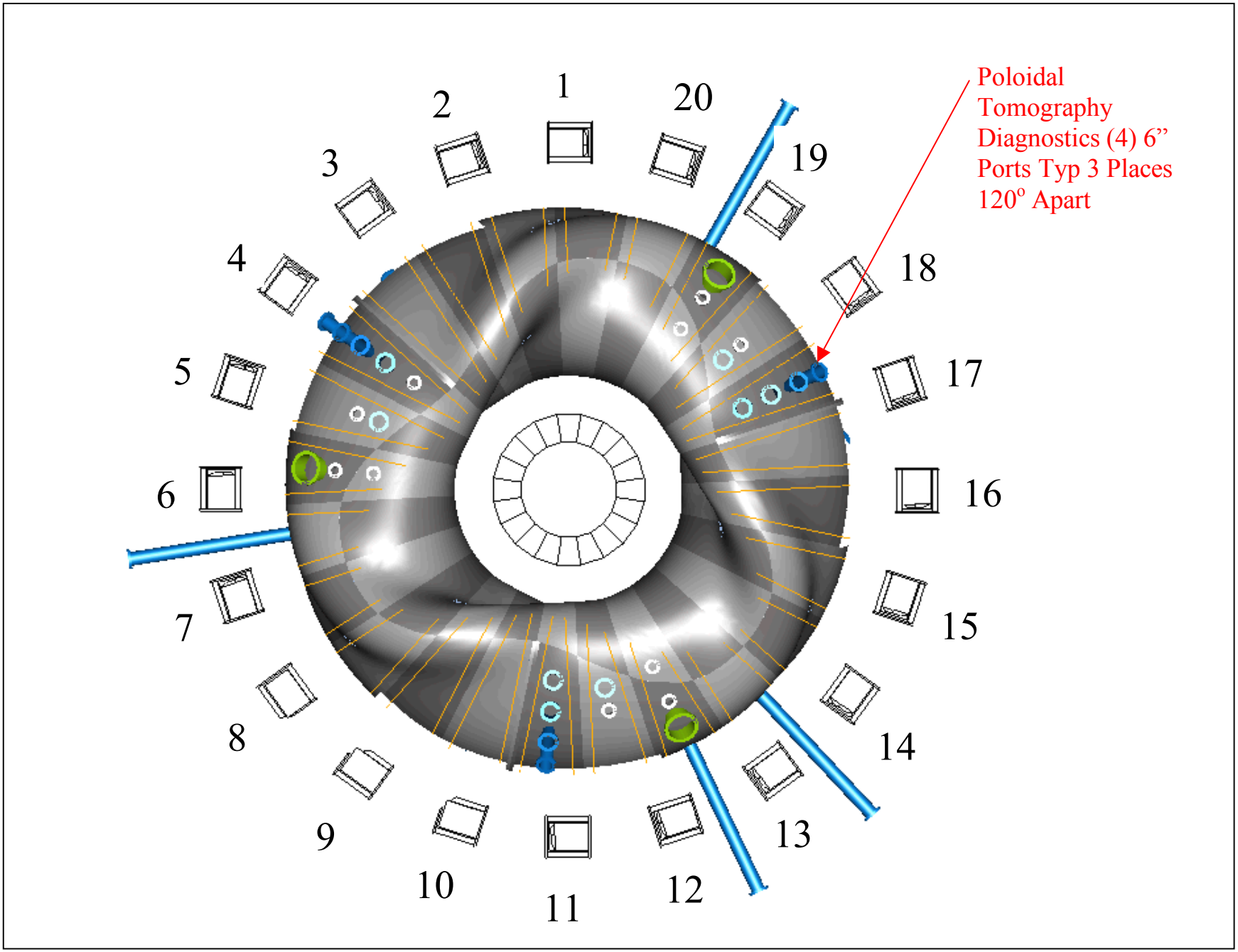
Poloidal
Tomography
Diagnostics (4) 6”
Ports Typ 3 Places
120° Apart
1
2
3
4
5
6
7
8
9
10
11
12
13
14
15
16
17
18
19
20

Machine Design – Diagnostics (Thomson Scattering)

Thomson Scattering - The best geometry for the Thomson system would use a radial midplane laser beam at the oblate symmetry plane. This would require a 2.75” laser input port and, at the opposing point on the inboard surface, an in-vacuum cavity with a depth of 4-6” for a laser beam dump. The laser input port should be at a location where a radial port extention can fit between TF coils and extend radial outward 3-4 meters, so that the laser input window can be placed far from the laser focus to avoid laser damage. The viewing port for this system should be an 10” port with an associated shutter drive port. The first choice for viewing geometry would be to view the beam from above or below. Another option would be to view the beam from the midplane.

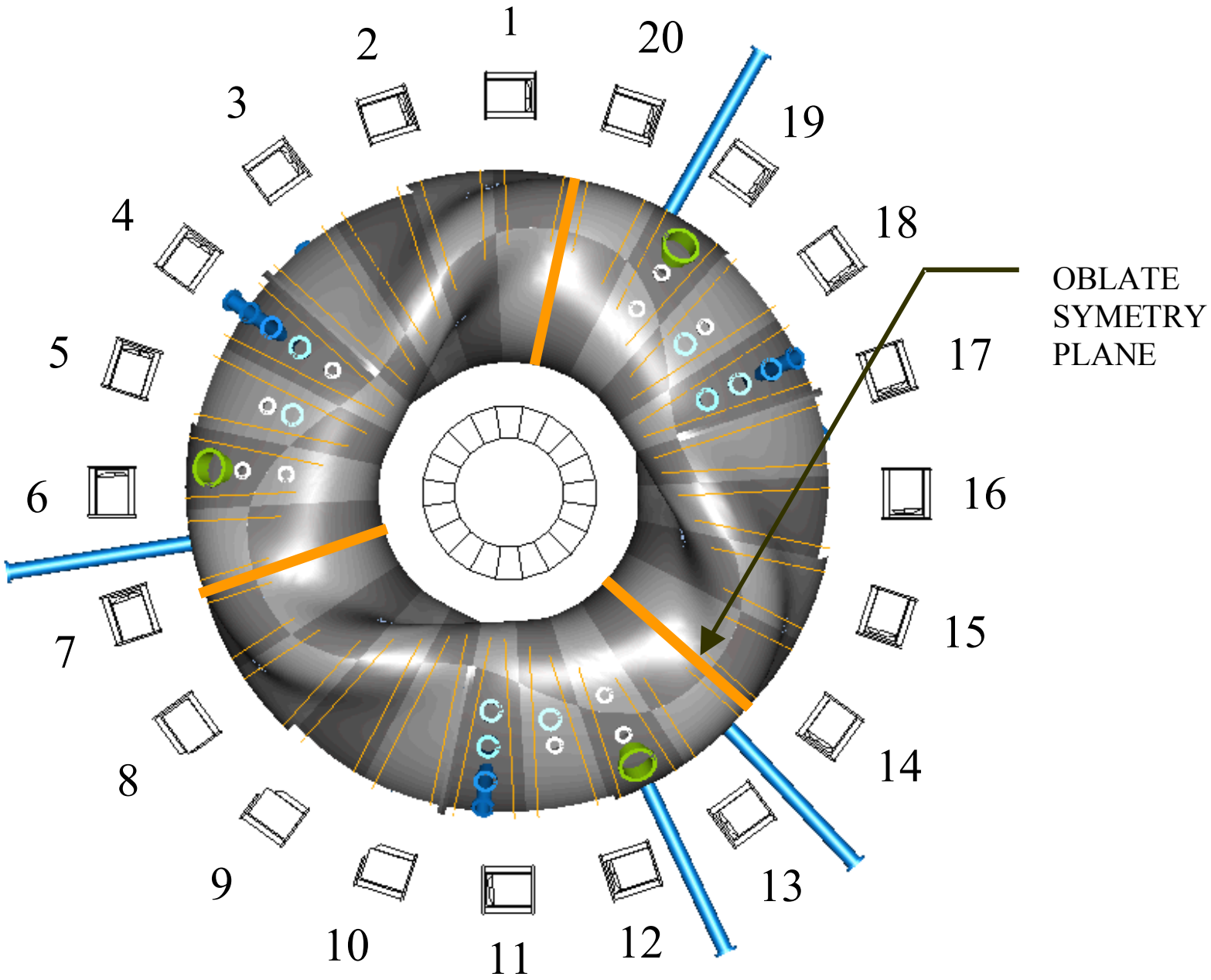
1
2
3
4
5
6
7
8
9
10
11
12
13
14
15
16
17
18
19
20
OBLATE
SYMETRY
PLANE

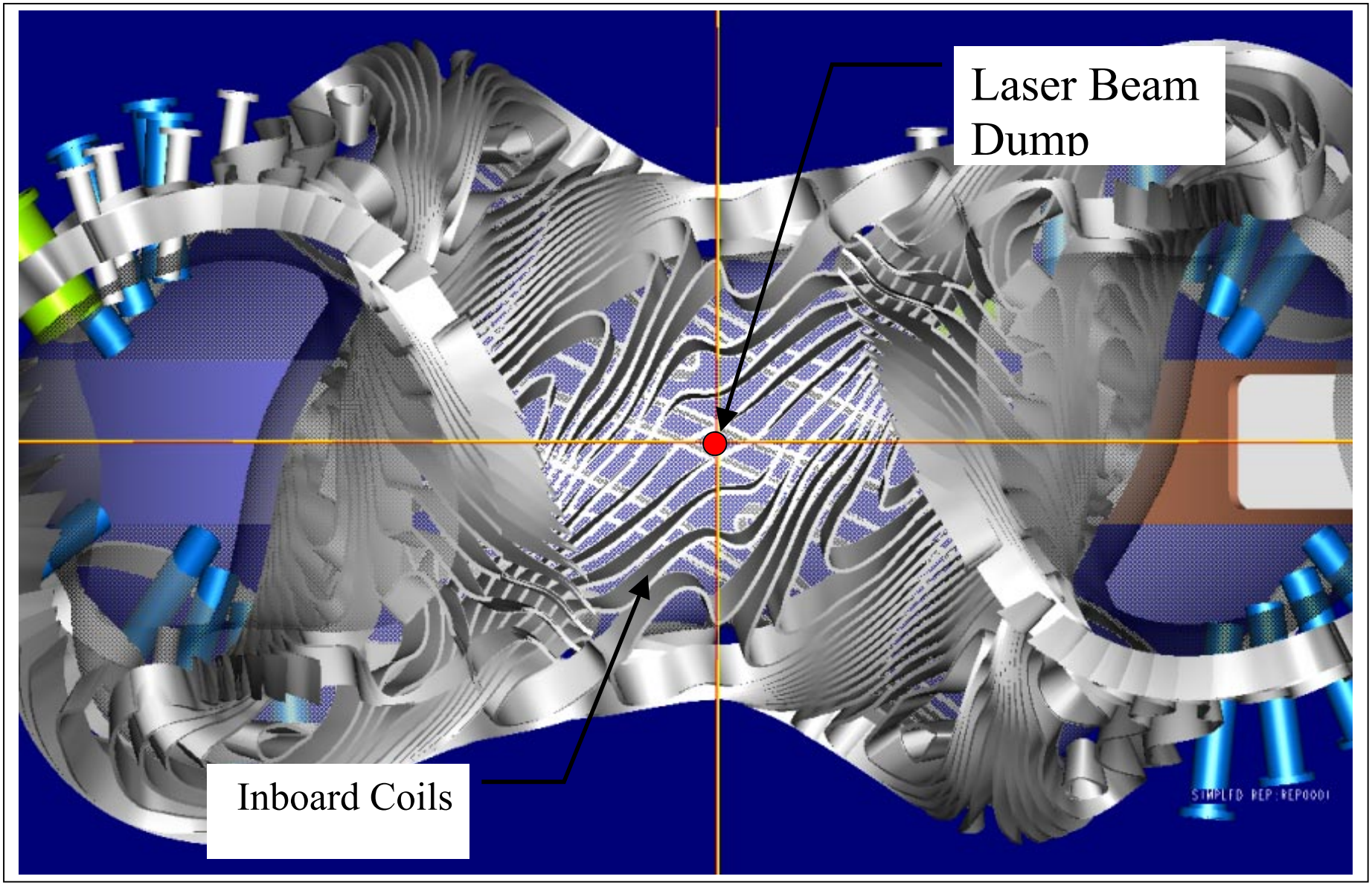
Laser Beam Dump
Inboard Coils
STAPLED REP:REP0001

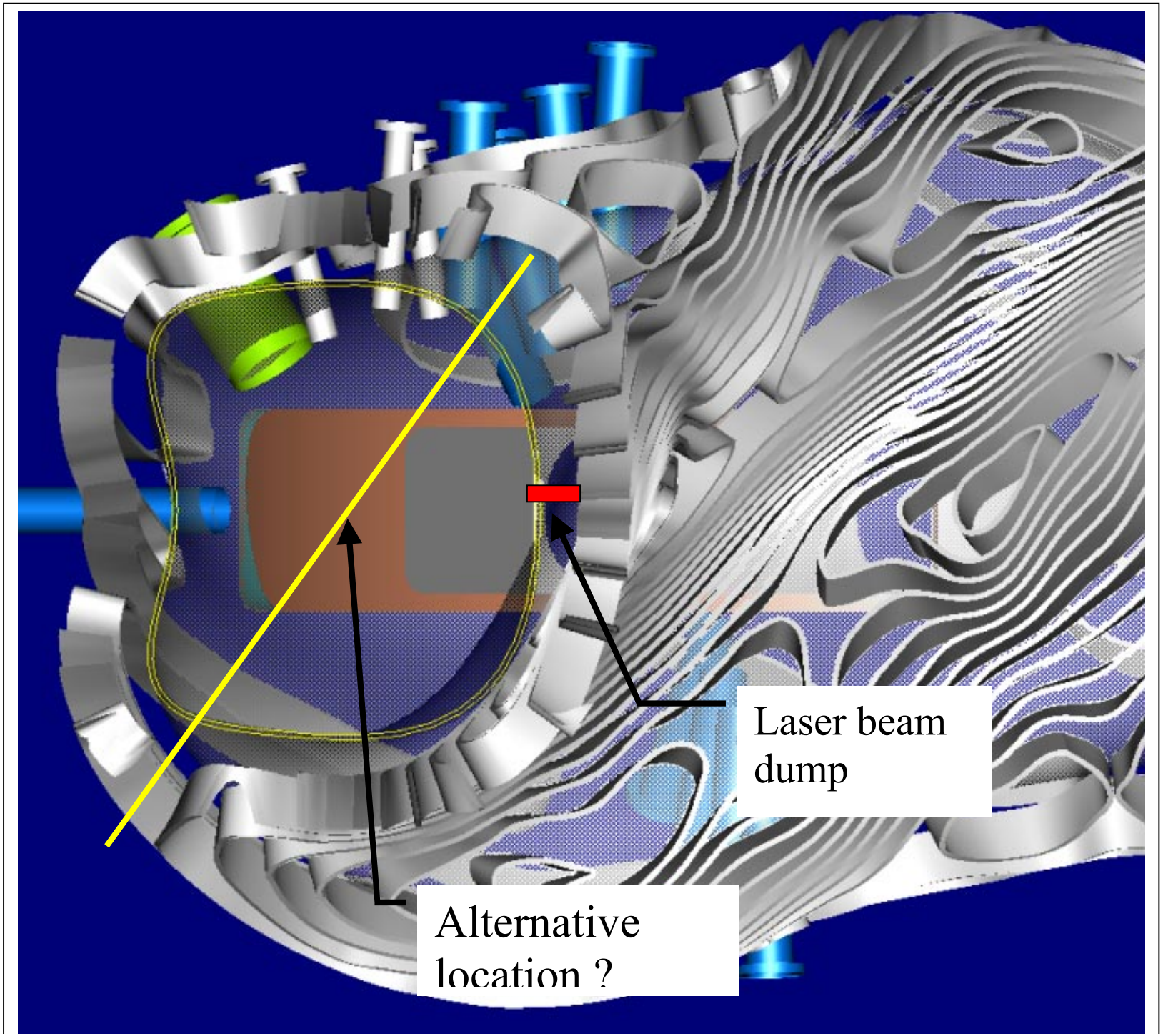
Laser beam dump
Alternative location ?

Machine Design – Diagnostics (X-ray PHA and Neutral Particle Analyzer)

X-ray PHA and Neutral Particle Analyzer These diagnostics require a flight tube which extends outside the TF coils defining a sightline which passes through the plasma core. Horizontal or vertical sightlines are most convenient. Each would require a 6" port.

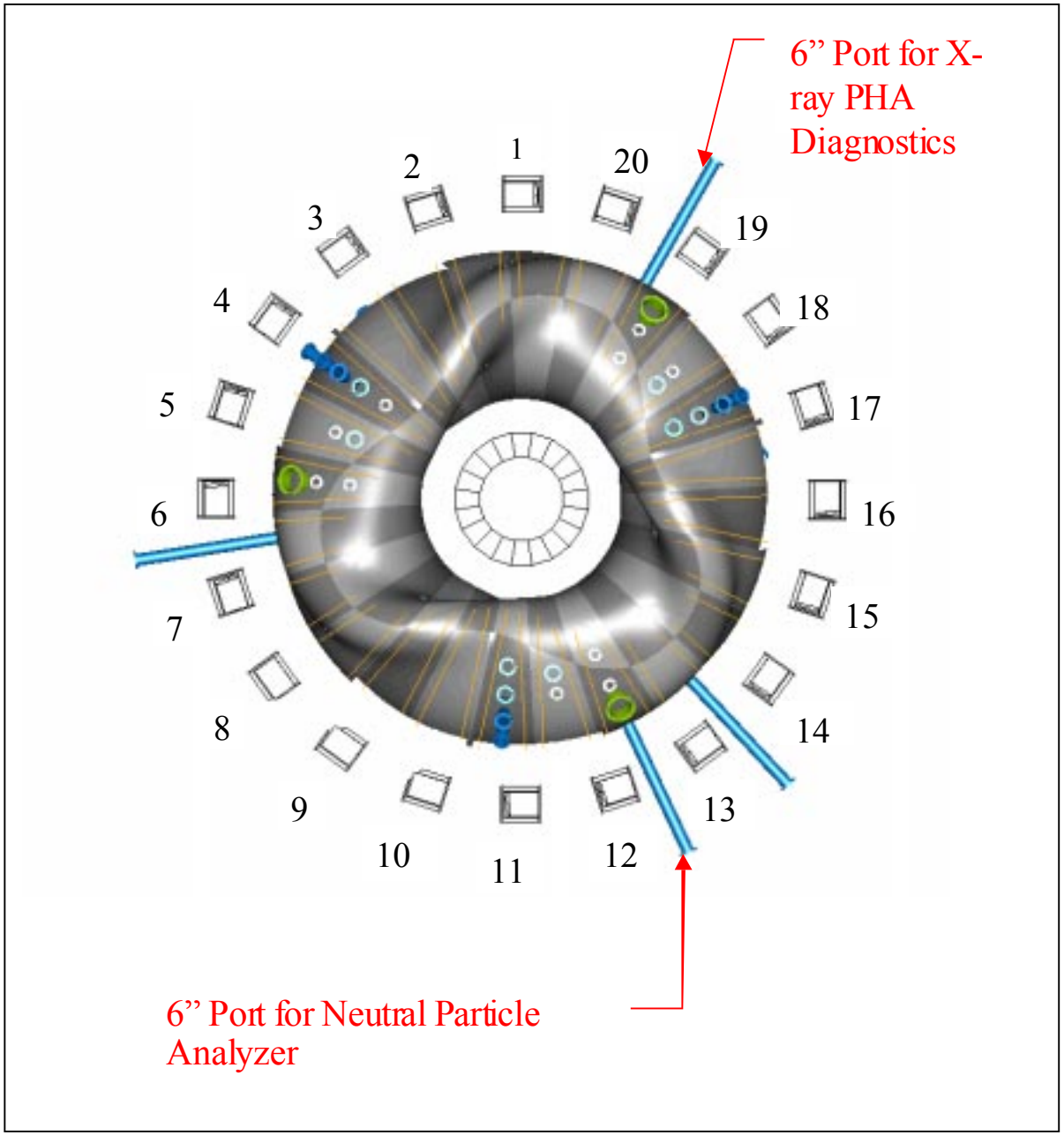
6” Port for X-ray PHA Diagnostics
1
2
3
4
5
6
7
8
9
10
11
12
13
14
15
16
17
18
19
20
6” Port for Neutral Particle Analyzer

Machine Design – Diagnostics (Scannable Probe)

Scannable Probes - Probes with a 18-24”travel would require 6” ports at locations where the probe drive mechanisms can extend normal to the plasma surface and avoid the TF coils and other structures for a distance of ~ 2 meters from the vessel. Diagnostics which would use these ports would be a **fast scanning Langmuir probe** and a **fast ion loss probe.**

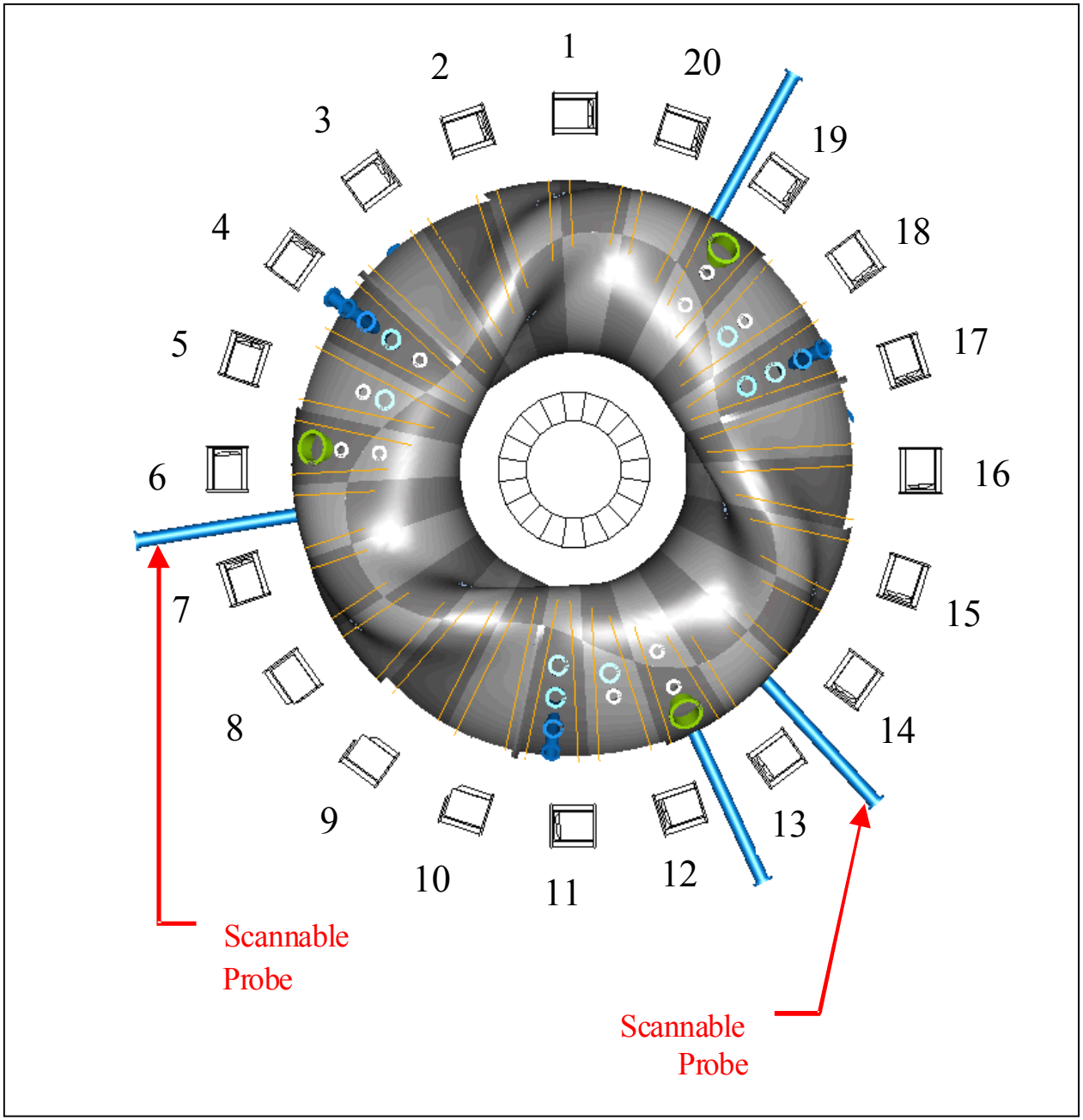
1
2
3
4
5
6
7
8
9
10
11
12
13
14
15
16
17
18
19
20
Scannable
Probe
Scannable
Probe

Machine Design – Summary

- The access study has collected requirements and integrated models of the NB, RF heating, Vacuum Pumping, and Diagnostics.
- Based on work done these components appear to fit based on the assumptions defined.
- There are important issues remaining with neutral beams, vacuum pumping and other diagnostics.
- Additional work remains to be done.