NCSX PROJECT MEETING

MARCH 23-24, 2000

Vacuum Liner

P. L. Goranson

NCSX VACUUM LINER

PRESENTATION OUTLINE

- Fabrication Update
- Cost Algorithms
- Cost Drivers
- Coating Studies
- Low Cost Tile Options
- Thermal analyses

NCSX VACUUM LINER
FABRICATION UPDATE

Main thrust of Liner fabrication & procurement study has changed from brake bending to pressing or explosive forming.

Rational for change:

- UW experience
  - UW attempted brake bent prototype
    results unsatisfactory
  - would have required very large number of segments

- Russians prefer explosive forming

- Higher reliability with pressed shape
  - fewer weld seams to leak
    as few as 18 parts
    minimum of 48 brake bent parts(96 might be required)
  - less weld distortion to contend with

- Less risk
  - formed vessel can without question be made, concern is monetary
  - brake bent method is questionable, R&D required

NCSX VACUUM LINER

FABRICATION UPDATE CONTIN.

- Many US contacts made regarding hydro forming, pressing, and stamping.
  - no interest shown
  - capability limited to 34 inch diameter
- KStar utilizing 10000 ton press at Hyundai.
  - possiblity for NCSX?
- Russian contacts have been made.
  - first quote came in $188k higher than estimated

Letter to	Institute	Contact	Quote	Process	Comments
Filatov	Efremov, St. Petersburg, “Sintez”	Krilov			Wants more info. US responded with letter, ProE Models will follow
Lapshyn	Kharkov Inst. of Plasma Physics - Kharkov Aerospace Univ. - E.O. Paton Electric Welding Inst. -Atomic Turbines Plant “Turboatom”	Rudakov	$800k	Explosive forming	Ukraine
Fedorovich	Kharkov Aerospace Univ.	Molodikh			Ukraine-teamed with Lapshyn

NCSX VACUUM LINER

COST ALGORITHMS

Liner Excel spreadsheet updated

- Added 90 additional diagnostic ports
  - reflect decision to pursue conformal Liner

- Low sensitivity to plasma configuration (contour)
  - strongest plasma link is major radius and periodicity

- Costs linked to
  - total number of Liner segments
  - number of unique shapes (dies)
  - liner material and thickness
  - number of ports
  - PFC requirements (engineering, mount provisions, number of tiles, matl,etc)

NCSX VACUUM LINER
COST DRIVERS

Latest costs summarized

- Big ticket items identified and highlighted in red
- Cost of fabricating Liner weldment is only ~22% of total
  - increase in procurement cost of 200K$ would have only 7% impact on WBS 1 budget

NCSX VACUUM LINER

COST DRIVERS CONTIN.

COST SUMMARY

	Notes		K$	% Budget
Engineering	Design (title 1&2)	*	720	25.98
	Analysis		110	3.97
Liner fab	Welded liner shell		612	22.07
	Ports		143	5.17
	Support structure		37	1.34
	Blankets		70	2. 53
	Coolant lines		53	1.92
Material	Excluding R&D		341	12.30
Testing	Leak,welding		43	1.55
PFC	Mounts		115	4.16
NB	NB armor		48	1.73
Limiters	Limiters		9	0.33
Installation	Installation/assy		315	11.37
NC tapes			5	0.17
R&D	R&D with Engr and matl		150	5.41
		Total	2771.46	100.00

* Note: 430K$ of this is for design of PFCs and mounts.

NCSX VACUUM LINER

COATING STUDIES

It was proposed that vessel coating might replace tiles as PFC.

- graphite tiles are big cost driver
  - ~1.05 M$ cost for total coverage
  - require 350 C bake out

- Boron and Lithium investigated

Conclusions

- no definitive evidence found which would indicate that coatings could reduce or eliminate tiles
- coatings very thin 100-300 nm
  - little erosion protection

Work discontinued.

NCSX VACUUM LINER

LOW COST TILE OPTIONS

A study is under way to explore design options for tiles.

- Total coverage of wall with conformal tiles costly
  - major cost driver, approx. equal to Liner fabrication
  - engineering design must be complete even if tiles not fabricated and installed on day one
  - mounting means must be installed prior to final assembly
  - bottom line is that most of money is spent regardless whether tiles installed or not

- Low cost option desired
  - reduce number of shapes & thus engineering design
  - use flat rather than contoured to reduce machining?
  - avoid lap joints?
  - explore requirement, is partial coverage sufficient?
  - goal is universal tile that fits anywhere (spherical?)
  - simplistic mounting (single stud?)
  - liberal tolerance on location

NCSX VACUUM LINER

LOW COST TILE OPTIONS

NCSX LINER - MUSHROOM TILE

Floating tile assy permits positional adjustment and requires only approximate locating of baseplate.

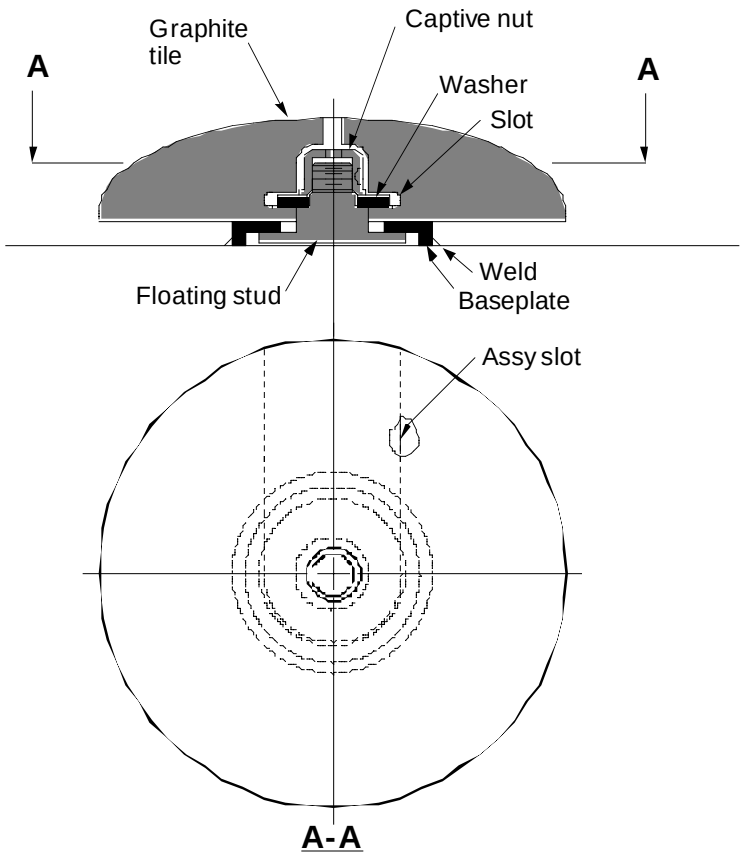

NCSX VACUUM LINER
THERMAL ANALYSES

Liner Thermal Cycling-1 D Analysis

Calculations

Excel spread sheet was prepared which relates thermal ratcheting to:

- liner thickness
- liner material
- tracing spacing
- thermal load and rep rate

NCSX VACUUM LINER

THERMAL ANALYSES CONTIN.

Results

- Temperatures reach steady state operation after 6 cycles

- Number of cycles to steady state relatively insensitive to spacing of coolant lines

- Typical data
  - Based on 12 Mw operation and 0.95 cm liner.
  - Coolant temperature 38 C.

Liner Steady State Temperatures - max/min(C)

Spacing of Coolant(cm)	Cooldown Time 5 minutes	10 minutes
10	115/71	100/49
15	140/108	119/76
20	158/134	136/102

NCSX VACUUM LINER

THERMAL ANALYSES CONTIN.

Summary

- Complete cool down not necessary, thermal ratcheting is very nominal

- Liner temperatures and operational gradients can easily be customized:
  - spacing of coolant lines
  - time between shots

- Shell cooling is limitation, not liner
  - no buttons to adjust
  - time constant very long >20 minutes

NCSX VACUUM LINER
THERMAL ANALYSES CONTIN.

Typical run

NCSX
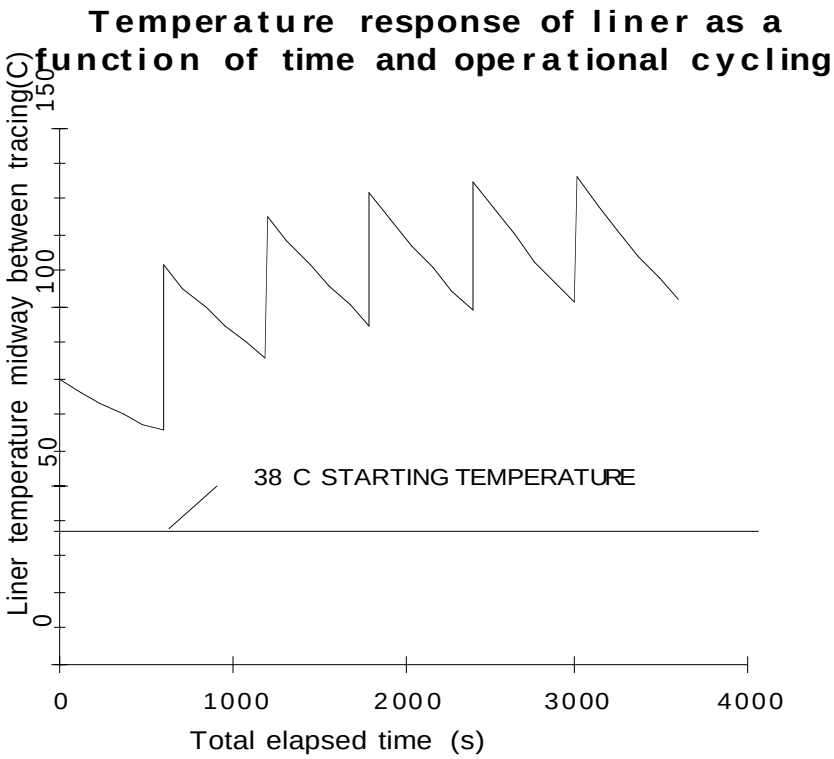
12 Mw operation
Tracing on 20 cm (7.87") centerlines
0.95 cm stainless liner
3 sec pulse length
10 minutes between pulses
38 C coolant