PROJECT MEETING

JULY 12-13, 2000

PFC COMPONENTS

P. L. Goranson

NCSX PFC COMPONENTS

PRESENTATION OUTLINE

- Requirements
- Cost Estimate Update
- PFC Configuration Options
    - Coatings
    - Low cost tiles
    - Conformal blankets
- Divertor/limiter design
- NB Thermal Analyses
- Issues

NCSX PFC COMPONENTS

REQUIREMENTS

Baseline criteria unchanged, progress made in following areas:

- **Neutral Beam Targets**
  - two targets will handle all four NB

- **Limiters/divertors**
  - Location and number still TBD
    Two per period?
  - Basing studies on other devices(HSX, LHD, W7-X)
  - Poloidal limiters probably of no use

- **Liner**
  - Coatings techniques such as boronization used for “bare regions”

THERMAL LOADS

Based on 12 mW operation (~30-40 w/cm^2 average)

- NB Target – 800 w/cm^2 peak
- Limiters/divertors – TBD
  - preliminary studies assume thermal loads similar to NSTX
  - maximum allowable graphite temperature – 1200 C based on past devices.

GEOMETRY

- PFC components will fit comfortably within 25 mm envelope of Liner wall

NCSX PFC COMPONENTS

LINER/PFC COST UPDATE

- Neutral Beam study confirms armor cost estimates
  - two targets are required instead of four but area of coverage is correct
  - thermal loads are within parameters assumed and simple wall attachment is adequate

- Limiter[divertor] cost probably low
  - studies of other devices indicate geometry more complex than assumed
  - may be a factor of 5 increase in area required
  - may increase budget ~ 40-60K$]

NCSX PFC COMPONENTS

PFC OPTIONS

Study exploring PFC low cost options continuing

Total coverage of wall with conformal tiles costly

- major cost driver, approx. equal to Liner fabrication
- number of tile designs very large, exceeding NSTX

Options under study:

- Coatings on low heat regions of walls
- Reduction in tile complexity
- Conformal blankets

NCSX PFC COMPONENTS

PFC OPTIONS - COATINGS

Coatings such as boron and lithium alone will not provide adequate protection in high flux regions, nevertheless coatings will undoubtedly be used to supplement the other PFCs

- Coatings, primarily boronization, are presently used in every major device
  - getter oxygen
  - prevent sputter of impurities (metals) from exposed components

- Could reduce or replace tiles usage in some regions/applications
  - limiters and NB tile protection still needed
  - initial operation will have minimal tile coverage so wall coating will be required

NCSX PFC COMPONENTS

Coatings

[Conversation with H. Kugal]

Boronization has proven performance in all the major devices and information on several deposition methods is available. These include processes using the following:

- **diborane**[B2H6], used in most early work
  - gas
  - very good quality coatings but:
    - extremely toxic
    - flammable[pyrophoric]
  - expensive procedure

- **TMB**[trimethylboron]
  - gas
  - much less toxic than diborane
  - flammable but not explosive

- **decaborane**[boron hydride, B10H14]
  - sublimated from solid by heating
  - non toxic
  - non flammable
  - non explosive
  - Deuterated only available from Russia; expensive
  - Deposits carbon along with Boron

NCSX will borrow heavily from NSTX experience

- NSTX TBM deposition system is in work

NCSX PFC COMPONENTS

LOW COST TILES

Goal is universal tile that fits anywhere.

- use flat rather than contoured to reduce machining?
- avoid lap joints
- simplistic mounting (single stud?)
- liberal tolerance on location

NCSX PFC COMPONENTS

LOW COST TILE OPTIONS

NCSX LINER - MUSHROOM TILE

Floating tile assy permits positional adjustment and requires only approximate locating of baseplate.

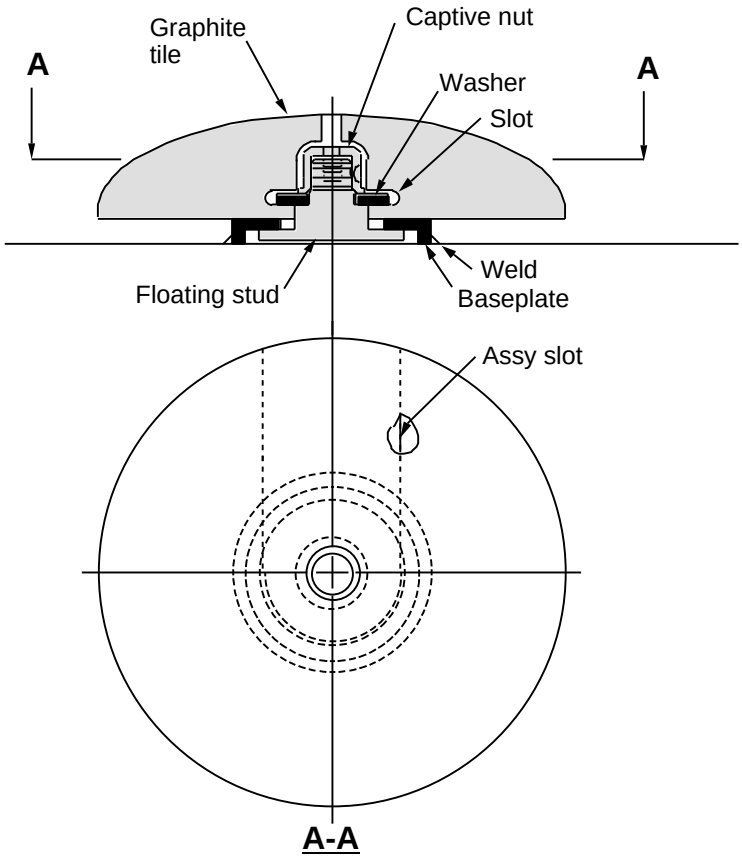

NCSX PFC COMPONENTS

LOW COST TILE OPTIONS

NCSX LINER - Cofig. using hexagons

Floating tile assy permits some latitude of positional and rotational adjustment.

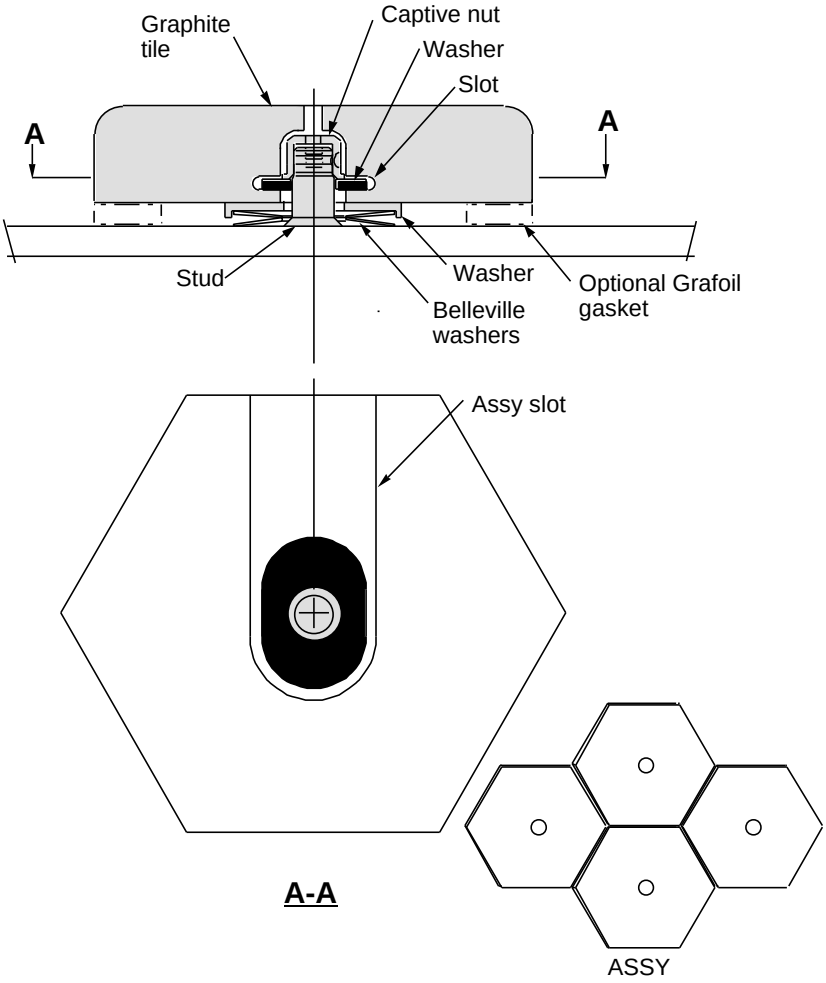

NCSX PFC COMPONENTS

LOW COST TILE OPTIONS

NCSX NB ARMOR
spherical tile concept

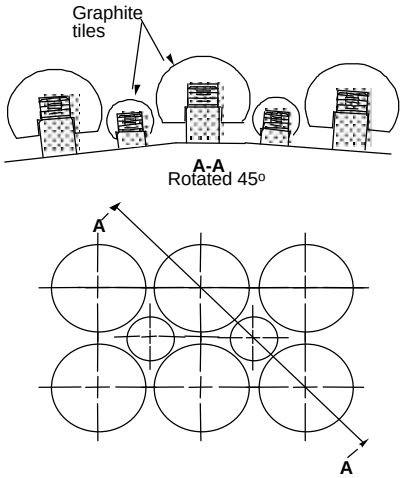

NCSX NB ARMOR
taper tile concept

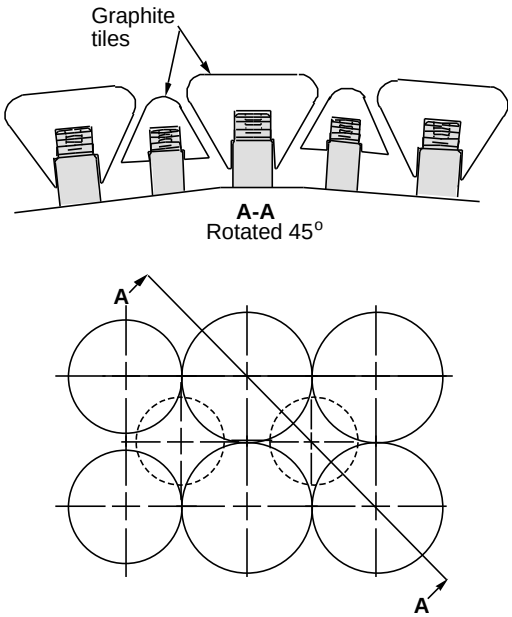

NCSX PFC COMPONENTS

LOW COST TILE OPTIONS

TAPER TILES [25 MM DIA] INSTALLED ON LINER WALL

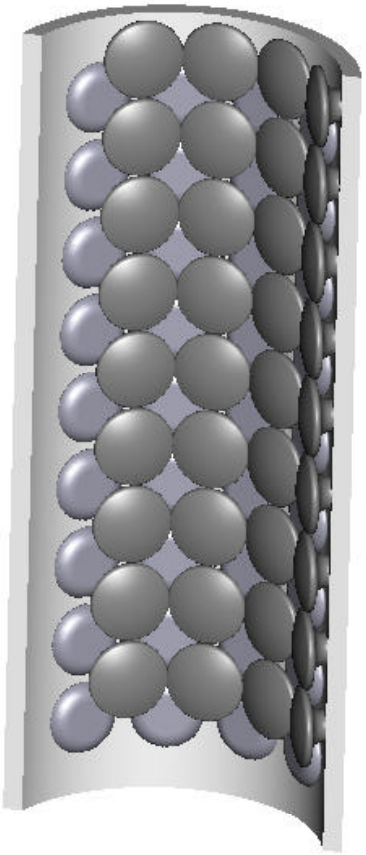

NCSX PFC COMPONENTS

CONFORMAL BLANKETS

Flexible conformal blankets could be used in large sections to fill between tiled areas

- Matrial should not contain oxygen
  -most common ceramic fabrics are silcates or oxides
- Fiber materials availability is being researched. Of interest are:
  - B_4C
  - SiC_2
- Graphite and CVD Boron coated graphite are most common
- Available as fibers, and often felt, woven fabric
  - individual fibers are non-porous
  - open structure should permit bake out and degassing
- Some biased ply fabrics can conform to both convex and concave contours. (ie “Indian finger traps, Chinese handcuffs”
  - may be patterned flat and installed onto contour
- Felt mat could be filled with boron or carbon slurries and dried to semi-rigid form after installation
- Strips of blanket could be retained by tile “buttons” See figure below.

NCSX PFC COMPONENTS

CONFORMAL BLANKETS

VACUUM LINER MIDPLANE PORT
PLAN VIEW - Dimensions shown at room temperature

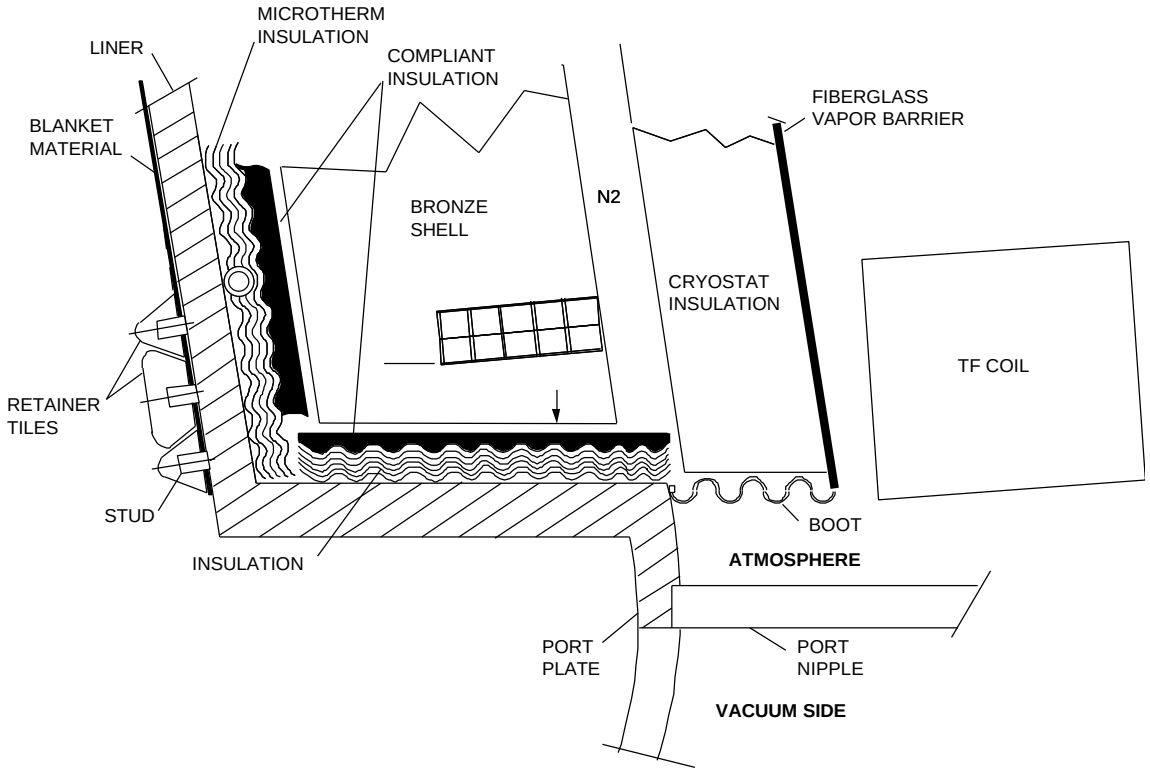

NCSX PFC COMPONENTS

CONFORMAL BLANKETS

Figure showing major PFC components, including conformal blanket wall protection and divertors.

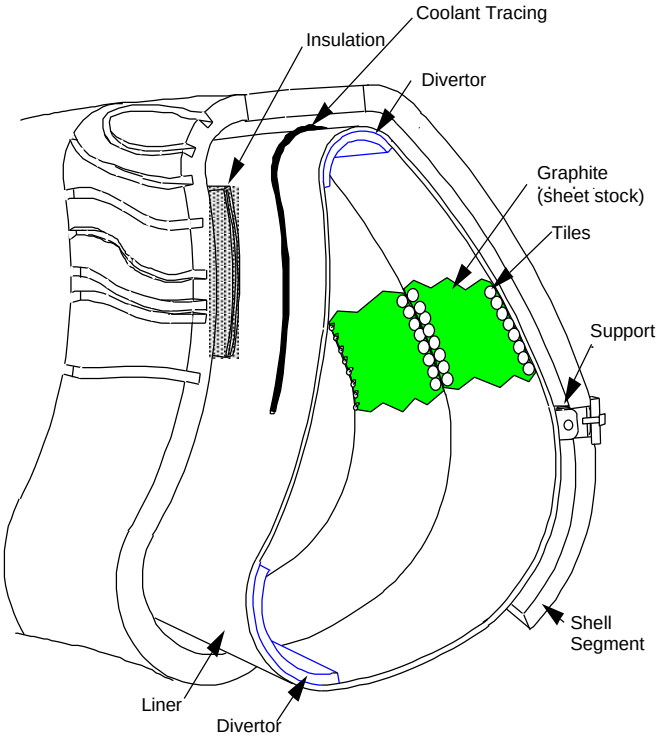

NCSX PFC COMPONENTS

LIMITER/DIVERTOR DESIGN

Review of divertors in recent devices

W7-X

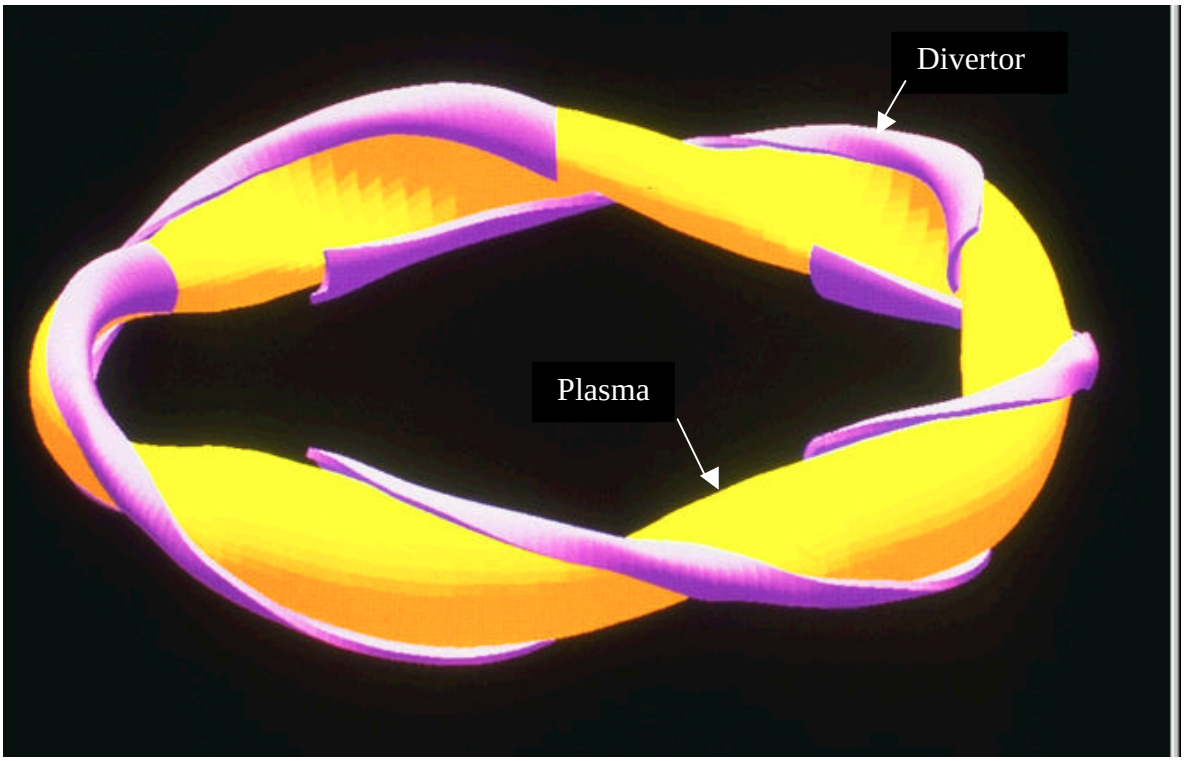

NCSX PFC COMPONENTS

LIMITER/DIVERTOR DESIGN

LHD HELICAL DIVERTOR PROTOTYPE

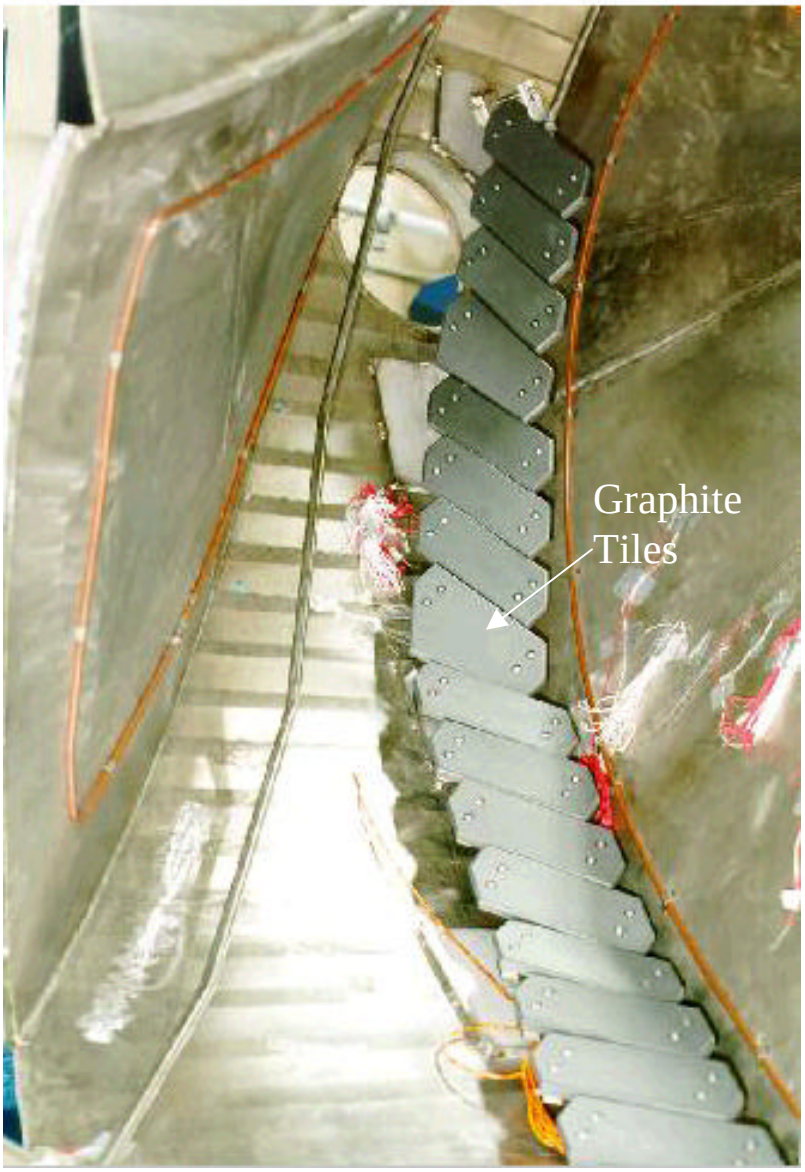

NCSX PFC COMPONENTS

LIMITER/DIVERTOR DESIGN

NCSX PLASMA

High flux is expected in the apex of the “bean” shaped plasma regions

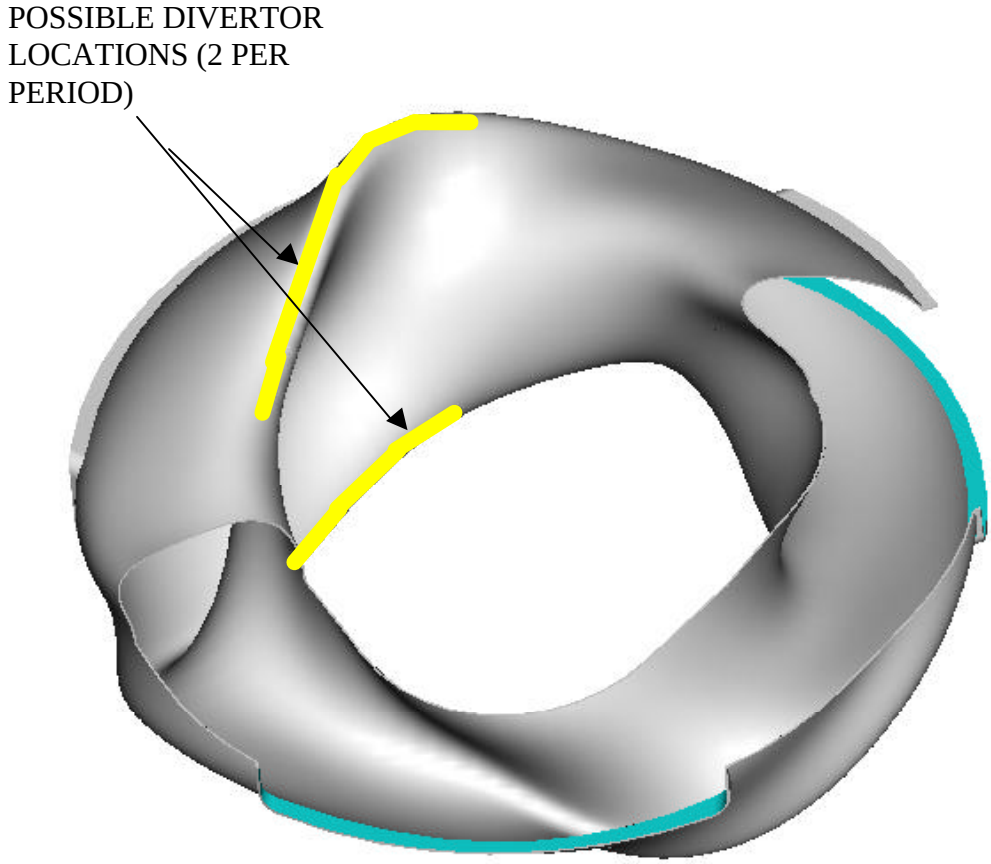

NCSX PFC COMPONENTS

PFC THERMAL MANAGEMENT

The NCSX Liner will be traced and insulated to provide bake out to 350 C and to protect shell from thermal loading

COOLING OPTIONS

- **NSTX experience**
  - Center stack thermally isolated and cooled by re-radiation to other PFC's
  - Steady state of 450 C with 5 s pulse and 300 s cooling
  - Passive plates and divertors cooled by conduction to tracing
  - All components met requirement of 5 minutes between shots
  - Pulse time and temperatures lower in NCSX
- **NCSX NB and Limiter tiles could operate in similar fashion to NSTX Center Stack (i.e. float)**
  - Isolate Liner from high thermal gradients at armor mounts
  - Liner will be bare during early operation
  - Overall Liner temperature rise is small; would serve as black body
  - High temperature in NB armor and Limiters permit quick initial heat loss
- **Total wall coverage would require thermal gaskets(Grafoil) for Liner tiles**
  - Liner tiles time constant too high without conduction
    no radiation heat path
  - Black body for other tiles lost

NCSX PFC COMPONENTS

NEUTRAL BEAM THERMAL LOADING

Criteria

- Armor must absorb total energy of NB pulse in absence of plasma.
- NB flat top pulse time of 1 second
- No portion of Liner wall outside armor to exceed average thermal load seen during normal 3 sec operational pulse (90 joules/cm^2).

Assumptions:

- NB flux values interpolated from figure 3 of H. Kugal memo 01-MAR-00-HK-01
- Beam foot prints are taken from M. Cole C82 plasma layout S01E310009A, 3/29/00.
- All four beams have identical foot print, i.e. distance to liner wall and angular orientation.
- Flux densities are calculated on midplane line of beam.
- No plasma present

NCSX PFC COMPONENTS

NB GEOMETRY

NB arrangement on NCSX device

- C82 plasma
- Dimensions in inches and mm

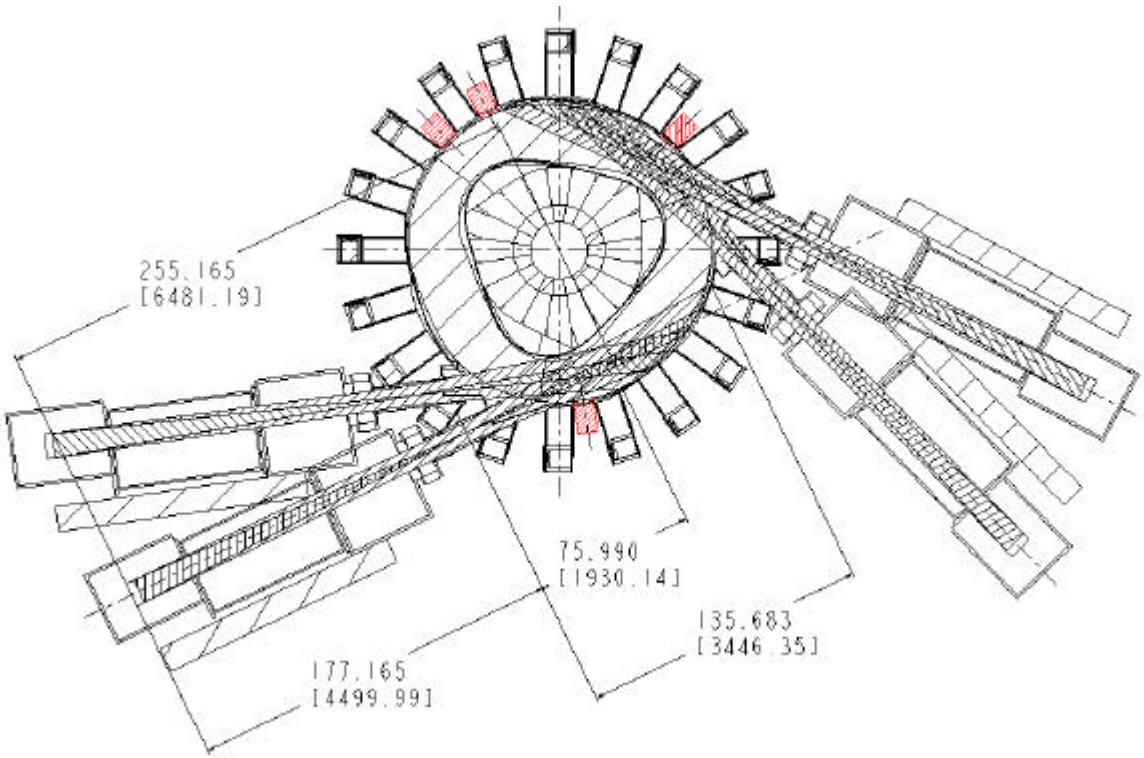

NCSX PFC COMPONENTS

NB THERMAL MANAGEMENT

Footprint(toroidal) of NB on Liner wall

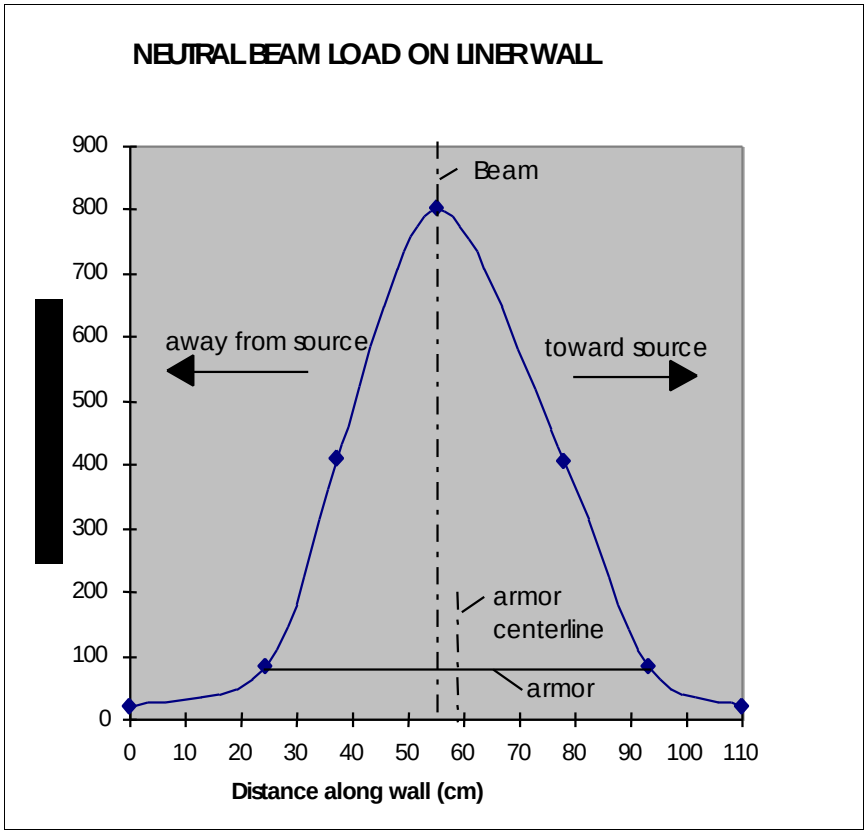

NCSX PFC COMPONENTS

NB Thermal Distribution

Results

- 2 beams on
- peak load 800 w/cm^2
- superposition of beams on Liner wall shown in figure below
- armor dimensions of 72 poloidal x 132 cm toroidal sufficient to meet criteria
- Full results documented in memo NB ARMOR REQUIREMENTS 01JUNE-00-PG-01

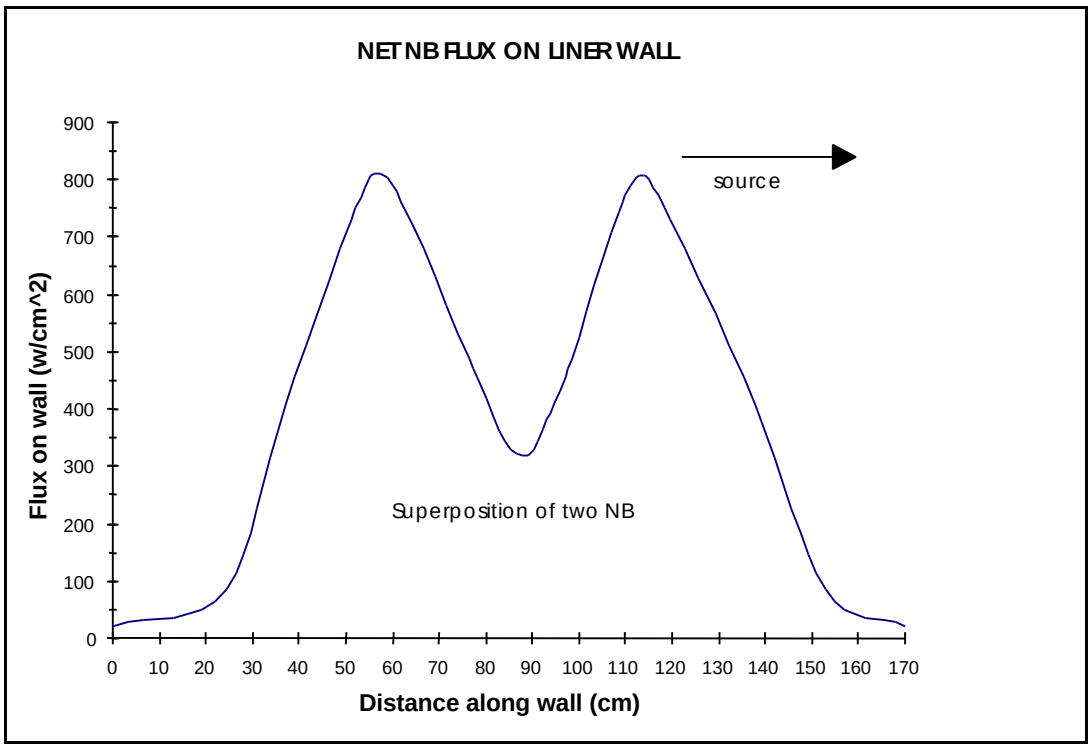

NCSX PFC COMPONENTS

NEUTRAL BEAM TARGET

Thermal response of NB tile

- heat does not reach back of tile
- real time cooling would be of no value
- temperature well below max allowable of 1200 C

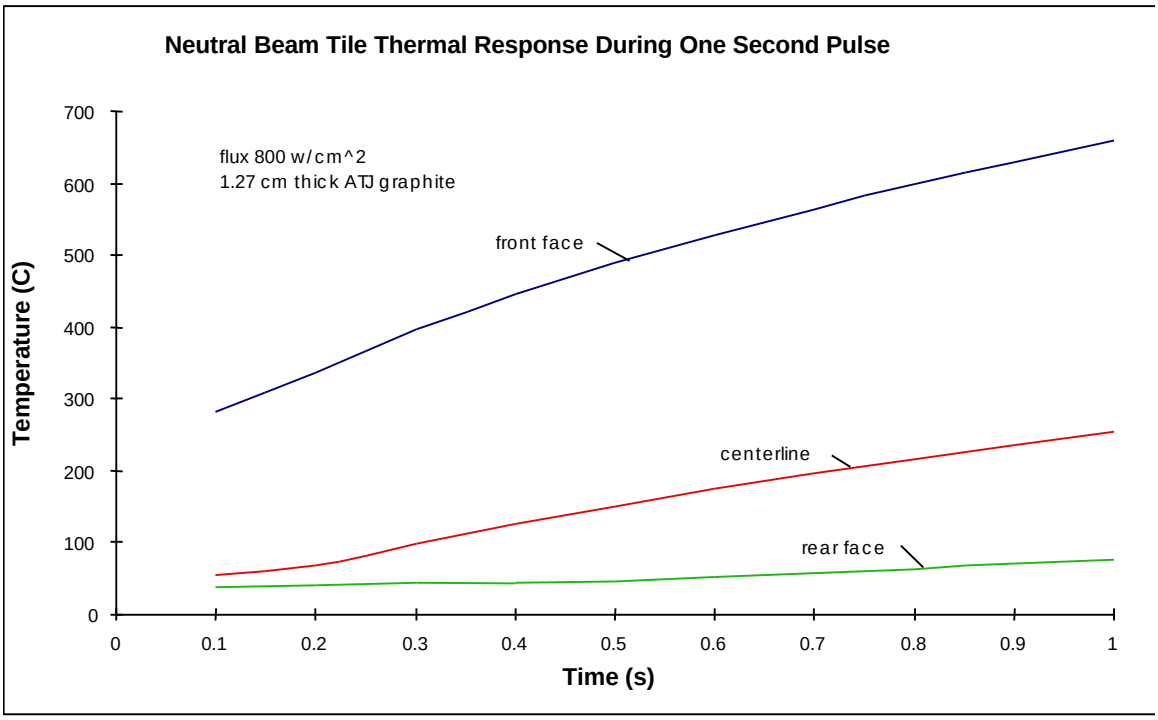

NCSX PFC COMPONENTS

Issues

Limiters/Divertors

- Location, configuration, and number unknown
- Thermal loading unknown
- Direction must come from Physics

Liner tile design

- Can not do prototypes of tiles until plasma and Liner contour firmed
- Size largely dependant on contour