NCSX

WBS 1 Stellarator Core Cost Study Update

Brad Nelson, Mike Cole, Paul Goranson,
Phil Heitzenroeder, Bob Simmons, Dave Williamson

NCSX Project Meeting

July 13, 2000

Cost Study

- **Goal:** Evaluate cost for each configuration to determine
  - What is relative cost of options?
  - Are cost differences among options significant?
  - Can any cost savings be identified?

- **Approach:**
  - Identify Cost Drivers / Discriminators
  - Develop a set of algorithms that can help evaluate the various configurations (relatively) quickly
  - Develop Cost estimate for each configuration option

Configuration Options to be considered

Option	Plasma	Conformal coils	Toroidal field / background coils	Poloidal field background coils
PBX-M	**C82**	**4064** **30 saddles**	**PBX-M TF coils,** **2 Tesla**	**PBX OH, EF21,** **3 new pairs EF**
1/R + saddles	**C82**	**4064*** **30 saddles**	**New TF coil set,** **2 Tesla**	**New PF / OH system**
Tilted TF	C82	536.3 30 saddles, 5 wavy PF	6 tilted TF coils per case 536	New OH system One pair VF
L=3	C82	619.4 36 saddles, 8 wavy PF	3 L=3 ,3 tilted TF per case 619	New OH system One pair VF
Modular	**C82**	**N/A**	**0424, 27 mod coils** **"trim TF" @ 0.3T**	**New PF / OH system**
TBD	TBD	TBD	TBD	TBD

* Used as strawman for cost comparison purposes only

Some of the Cost Drivers

Perceived cost drivers	Influences	Driven by	Scalable?
General			
overall size	nearly everything	physics req., cost constraints, PBX constraints	yes, over a small range
field	structure, current, etc.	physics mission	yes, over a small range
pulse length	current density, coolant type	physics mission	yes, over a small range
symmetry of background coils	no. of different component variations	PBX	somewhat
coolant / oper. temp.	need for cryostat	pulse length, current density	step function
PFCs			
no. of different types of tiles	tooling, NC tapes, assy time, spares	geometry, clearance	yes, if number is known
VV			
shape of vessel	no. of dies, no. of weld seams	shape of plasma, periods	with CAD model
no. of field welds	assembly time	shape of plasma, periods	if no. of dies is known
no. of ports	no. of port interfaces	diagnostics, htg, coil shape	yes, if no. is known
bakeout temp.	port interfaces, insulation, cooling/heating tracing	physics req.	nebulous
Conformal coils			
no. of coil types	no. of leads, power supplies	coil optimization	somewhat
no. of turns	winding time, packing fraction	field errors, power supplies	somewhat
total no. of shell segments or coil entities	no. of shell seg.casting patterns, no. of shell seg. NC tapes	time constant requirements	
width and length of winding slot	machining time	coil optimization	somewhat
no .of sizes of conductor	manf and winding tooling	coil optimization	somewhat

Cost Algorithm Progress

- Cost algorithms for various systems combined in spreadsheet format
- PFC, VV, Cryostat, TF, PF, Conformal Coils have been incorporated
- Costs mapped into new WBS (April 00 version)
- The WBS 1 systems will be completed first (stellarator system, incl background coils), then WBS 7 (machine assembly).
- First cut at “In-PBX”, “Tilted TF” and “L=3” options
- First cut at 1/R+saddles, and modular (all for C82 plasma)
- Methodology for assessing contingency included in spreadsheet

Modular and Saddle Coil Options

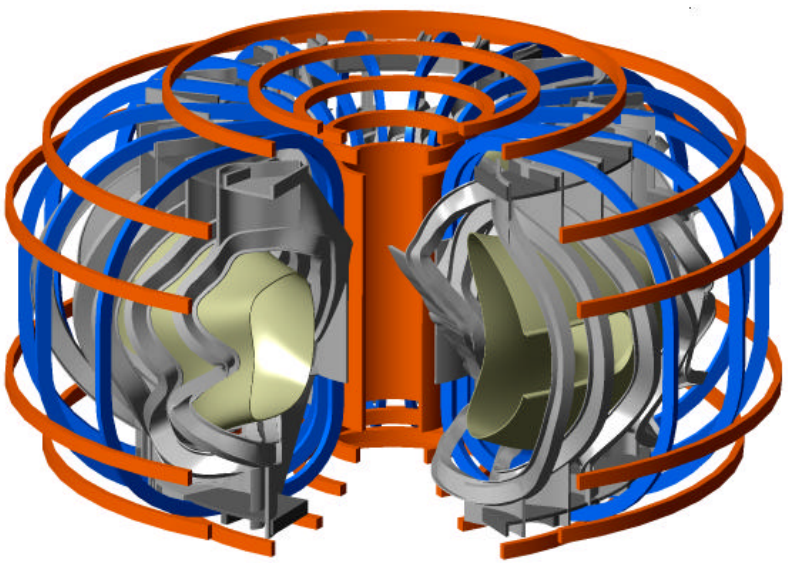

Modular, case 0424 with
0.3 T trim coils, new PF coils

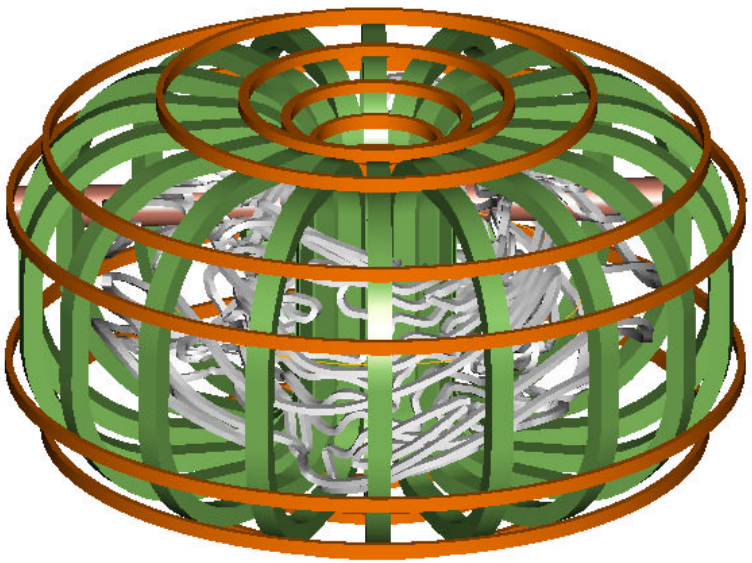

Saddles with
2 T TF coils, new PF coils

TF Coil design for Modular coil set

Assume:

<1% ripple at edge of plasma need at least 18 coils
+/- 0.3 T field contribution
18 coils, Jcoil = 2000 A/cm^2

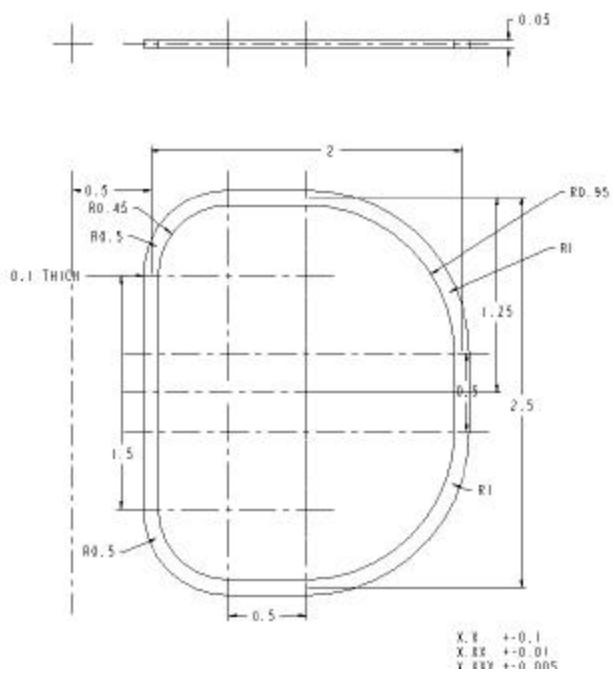

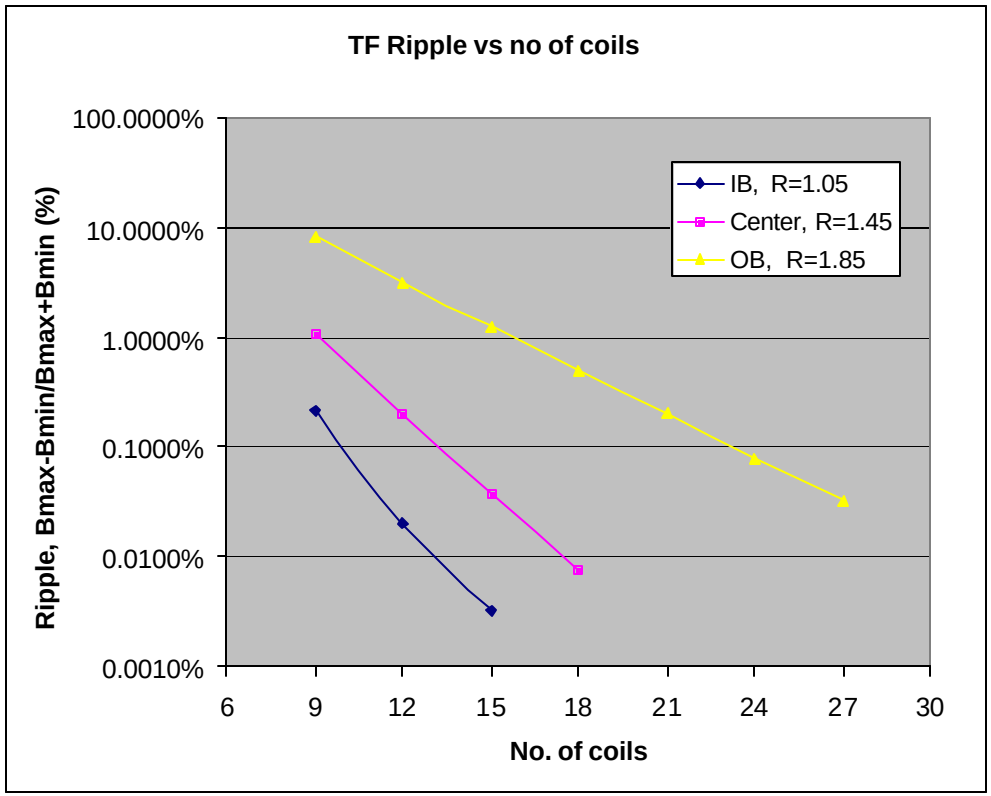

TF coil number: 27 coils interfere with beam, 18 is ok

27 TFcoils

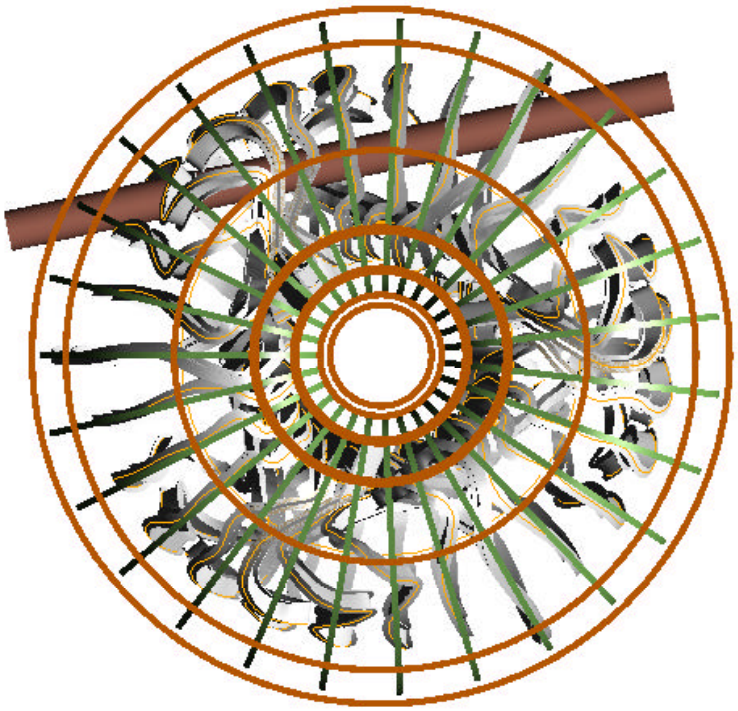

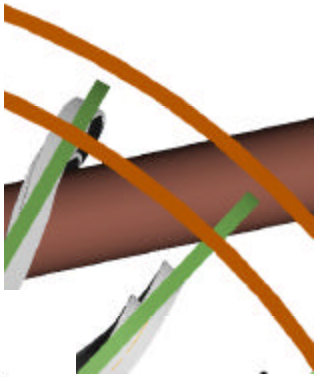

18 TF coils

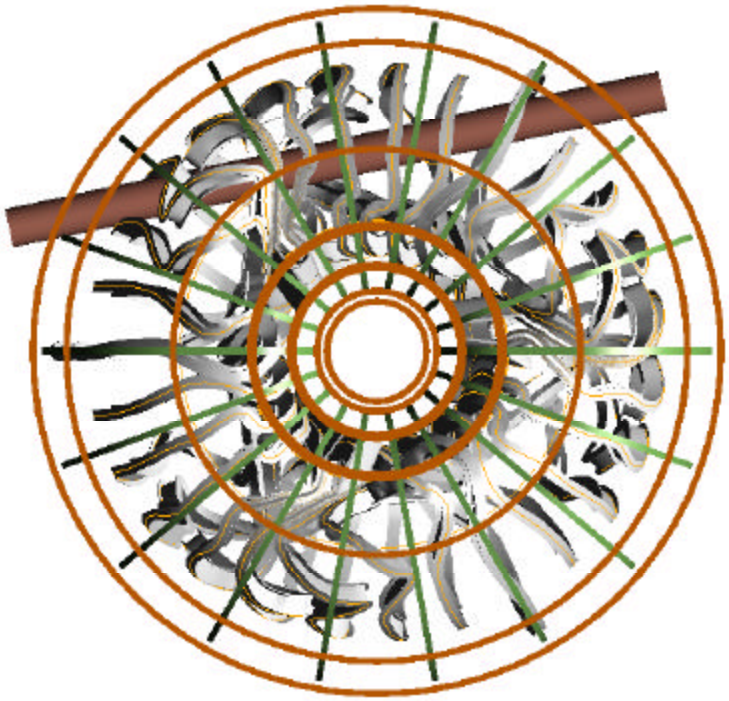

TF Coil costs

- TF coil costs estimated with cost algorithm and checked against other systems
- Algorithm predicts high costs for $/lb, but reasonable total cost
- Algorithm used in cost rack-up
  - 0.3 T trim coils for modular case
  - 2T coils for 1/R + saddles case

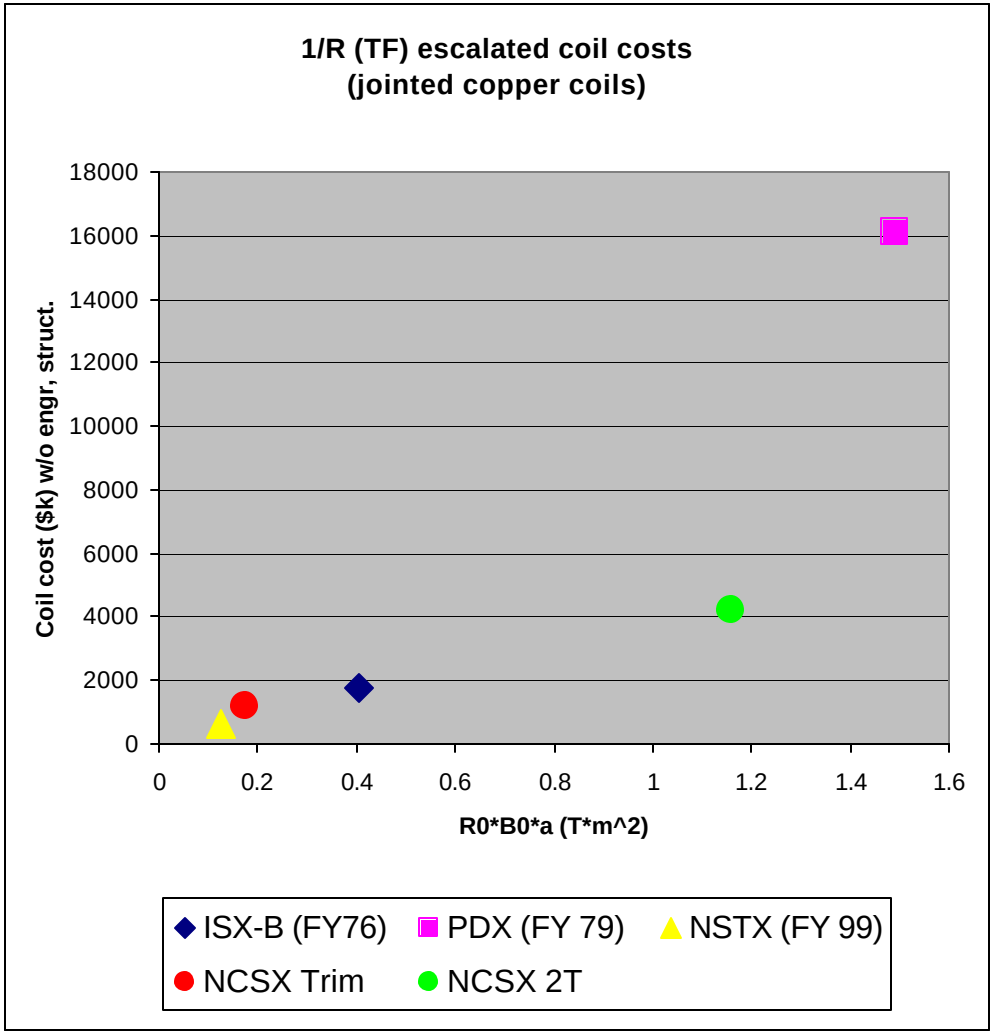

TF Coil historical costs

	ISX-B (FY76)	PDX (FY 79)	NSTX (FY 99)	NCSX Trim	NCSX 2T
cost at time	700	7171.2	594	Estimate	Estimate
escalated cost	1750	16135	612	1168	4226
R0	0.9	1.49	0.85	1.45	1.45
B0	1.8	2	0.3	0.3	2
a	0.25	0.5	0.5	0.4	0.4
R*B*a	0.41	1.49	0.13	0.174	1.16
coil wt.each (lbs)	2000	8000	2600	957	3557
no. of coils	18	20	12	18	18
$/lb	$49	$101	$20	$68	$66

PF Coils

- New OH/PF system needed for both options
- Coils located by “eye” and assigned current values based on 3 volt seconds in solenoid

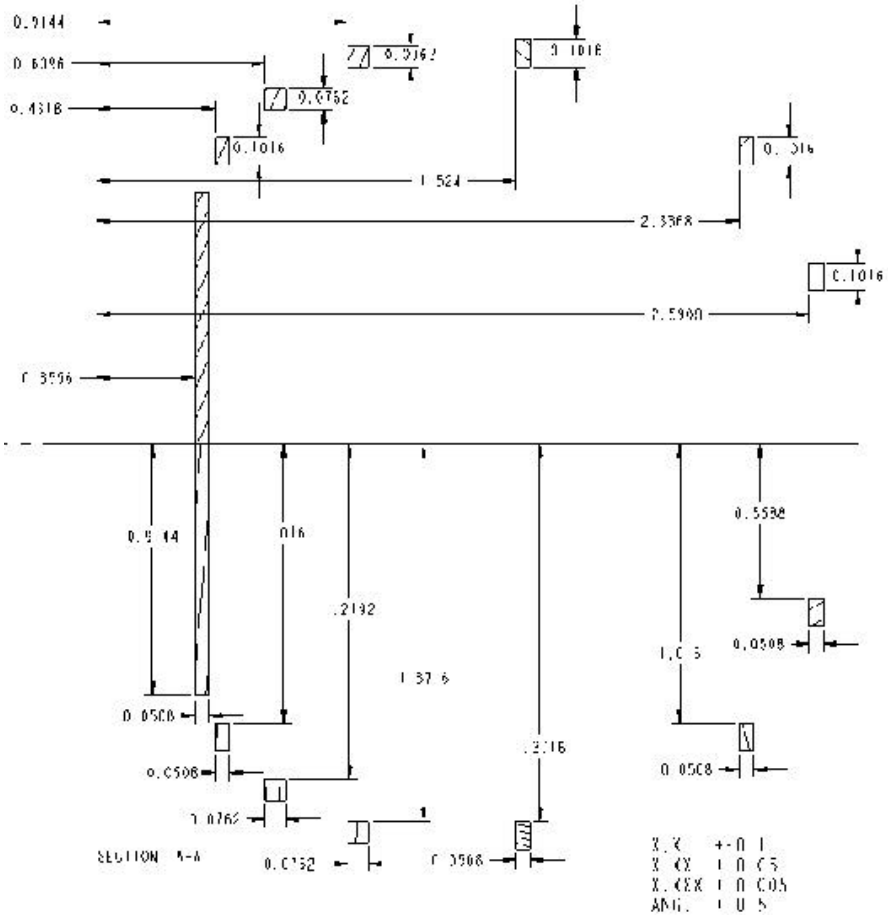

PF Coil Parameters assumed for cost est.

Parameter	Unit							
# of PF coil lead pairs		13						
R0	m	1.45						
Toroidal field	T	2.20						
		OH-1 solenoid	**OH-2**	**OH-3**	**OH-4**	**Inner VF**	**Mid-VF**	**Outer VF**
Total current	MA-turns	8.96	0.41	0.20	0.25	0.18	0.15	0.13
OH current	MA-turns	8.96	0.41	0.20	0.20	0.08	0.05	0.03
shaping current	MA-turns	0.00	0.00	0.00	0.05	0.10	0.10	0.10
radius	in		18.00	25.50	37.50	61.00	93.00	103.00
height	in		42.00	49.50	55.50	56.00	42.00	24.00
radius(scaled)	m	0.40	0.46	0.65	0.95	1.55	2.36	2.62
height(scaled)	m	0.00	1.07	1.26	1.41	1.42	1.07	0.61
angle from R0	deg	180.00	132.94	122.54	109.44	86.00	49.47	27.60
dr, nominal	in	3.94	3.00	3.00	4.00	3.00	3.00	3.00
dz, nominal	in	70.80	6.00	3.00	3.00	3.00	3.00	3.00
dr, scaled	m	0.10	0.08	0.08	0.11	0.08	0.08	0.08
dz, scaled	m	1.89	0.16	0.08	0.08	0.08	0.08	0.08
gross cur. dens.	A/cm^2	4528.40	3187.49	3187.49	2977.74	2760.96	2362.53	1964.09
no. of turns		360.00	16.00	8.00	10.00	8.00	6.00	6.00
current per turn	A	24883.03	25448.55	25448.55	25358.84	22043.21	25149.52	20908.09
packing fraction		0.75	0.75	0.75	0.75	0.75	0.75	0.75
approx. wt./coil	lb	6826.20	503.85	356.89	699.79	853.74	1301.61	1441.57
lead length	m	8.1	16.9	16.3	15.6	14.4	13.1	13.0

Modular and Saddle Coil costs

- **Modular costs estimated with cost algorithm and checked against actual costs for other non-planar systems (W7-AS, HSX, ATF)**

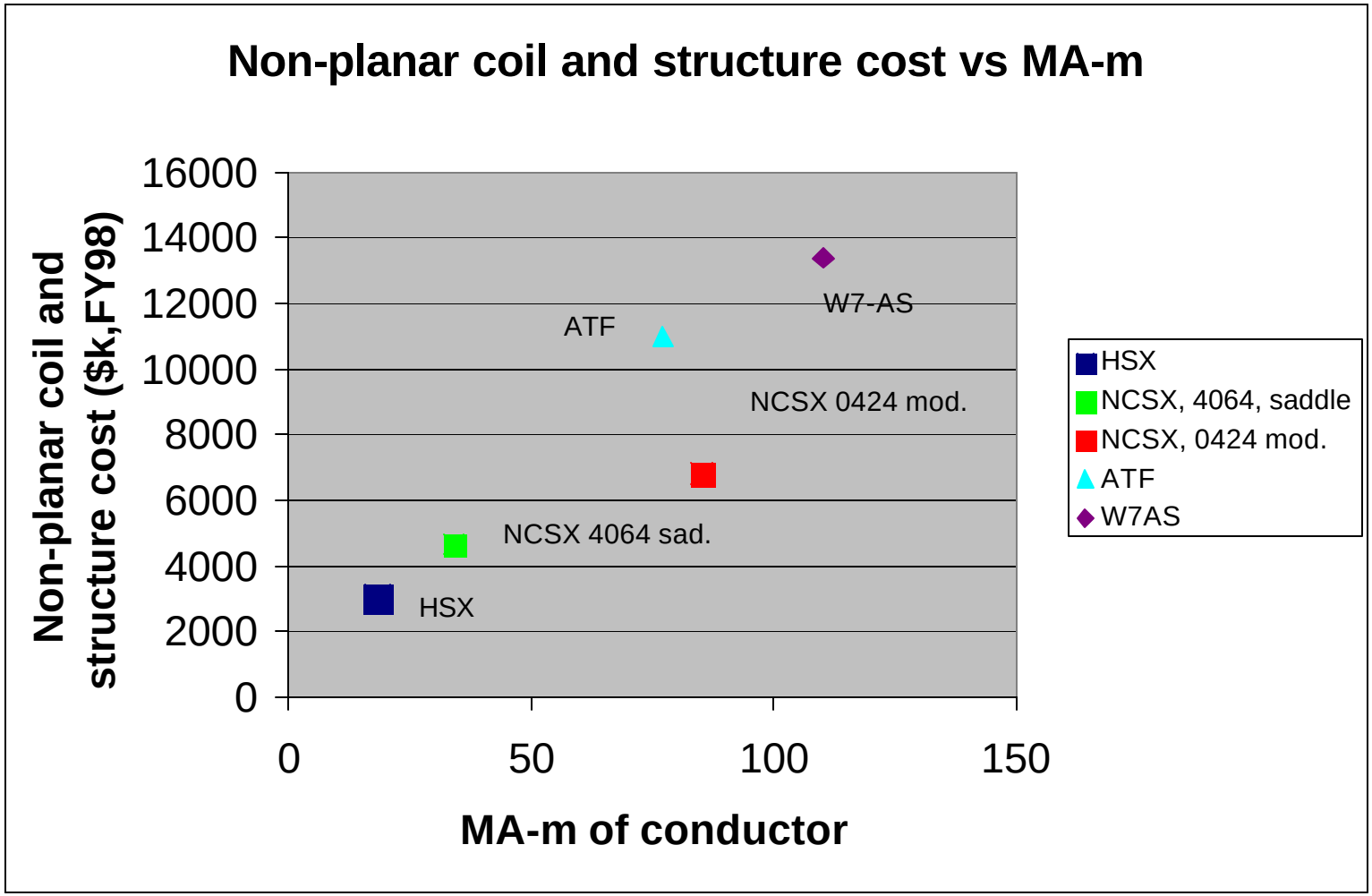

Contingency and risk: What is approach?

Contingency can be developed from 3 risk factors:

- **Technical Risk**

  based on the current state and level of the design

- **Schedule risk**

  based on subsystem's criticality to the overall schedule

- **Cost risk**

  based on the overall estimating methodology used to arrive at the cost estimate

Contingency and risk: Standard assessment factors

Risk Factor	*Technical*	*Schedule*	*Cost*
1	Existing Design and Off the Shelf H/W	*Not Used*	Off the Shelf or Catalog Item
2	Minor Modifications to an Existing design	No Schedule Impact on Any Other Subsystem	Vendor Quote from Established Drawings
3	Extensive Modification to an Existing Design	*Not Used*	Vendor Quote with Some Sketches
4	New Design, but Nothing Exotic	Delays Completion of Non-Critical Path Subsystem Activity	In-House Estimate Based on Previous Similar Experience
6	New Design, Different from Established Design or Existing Technology	*Not Used*	In-House Estimate with Minimal Experience, but Related to Existing Capabilities
8	New Design that Requires Some R&D, but Does Not Advance the State-of-the Art	Delays Completion of Critical Subsystem Activity	In-House Estimate with Minimal Experience and In-House Capabilities
10	New Design Development of New Technology which Advances the State-of-the Art	*Not Used*	Top-down Estimate Based on Experience from Analogous Programs
15	New Design, Way Beyond the Current State-of-the-Art	*Not Used*	Engineering Judgment

Contingency and risk: Standard weighting factors

Technical, Schedule & Cost Weighting Factors

Area	Condition	Risk %
Technical	Design OR Manufacturing Uncertainties	2%
	Design AND Manufacturing Uncertainties	4%
Schedule	Same for All Cases	1%
Cost	Material Cost OR Labor Rate Uncertainties	1%
	Material Cost AND Labor Rate Uncertainties	2%

Contingency and risk: first cut at factors for NCSX Core

	WBS 110 PFCs		WBS 120 Vacuum Vessel		WBS 130 TF Coils		WBS 140 PF Coils		WBS 150 Cryostat		WBS 160 Support Structure		WBS 170 Saddle Coils	
cost category	**risk**	**weight**	**risk**	**weight**	**risk**	**weight**	**risk**	**weight**	**risk**	**weight**	**risk**	**weight**	**risk**	**weight**
technical	4	2%	8	2%	2	2%	2	2%	2	2%	4	2%	8	2%
schedule	4	1%	8	1%	4	1%	4	1%	2	1%	4	1%	4	1%
cost	10	2%	15	2%	10	2%	10	2%	8	2%	15	2%	15	2%
composite contingency		32%		54%		28%		28%		22%		42%		50%

What do we expect for different options?

	Opt. 2C, (12/98) ($k)	4064 in PBX ($k)	4064 with new TF/PF ($k)	0424 modular with .3 T trim ($k)
1 Core Systems	**$12,869**			
conceptual design	$984	No change	Little change	Little change
11 - Plasma Facing Components	$4,045	No change	No change	No change
12 - Vacuum vessel	(incl in PFCs)	No change	No change	No change
13 - TF (background) Coil Systems	$26	No change, maybe +	Much higher, new coil set	Higher, new coil set
14 - PF Coil Systems	$0	Higher, 3 pairs new coils	Higher, all new coils	Higher, all new coils
15 - Cryostat	$575	Lower for new design	Lower for new design	Lower for new design
16 - Machine Structure	$695	About the same	Unknown, assume higher	Unknown, assume higher
17 -Conformal Coils	$6,544	higher	Higher, more complex	Much higher, primary field

How do options compare so far?
Core Systems Preliminary information

	Opt. 2C, (12/98) ($k)	4064 in PBX ($k)	4064 with new TF/PF ($k)	0424 modular with .3 T trim ($k)
1 Core Systems	**$12,869**	**$17,395**	**$34,463**	**$27,755**
conceptual design	$984	$984	$1,546	$1,305
11 - Plasma Facing Components	$1,925	$1,561	$1561	$1561
12 - Vacuum vessel	$2,120	$3,457	$3,462	$3,525
13 - TF (background) Coil Systems	$26	$45	$8,036*	$2,885
14 - PF Coil Systems	$0	$425	$1,490	$1,490
15 - Cryostat	$575	$184	$184	$184
16 - Machine Structure	$695	$414	$7,853	$1,202
17 -Conformal Coils (saddle, modular)	$6,544	$10,324	$10,324	$15,604**

*based on PDX structure cost
**most structure cost is in conformal coil estimate

How do options compare so far?
All Systems Preliminary information

	Opt. 2C, (12/98) ($k)	4064 in PBX ($k)	4064 with new TF/PF ($k)	0424 modular with .3 T trim ($k)
1 Fusion Core Systems	**$12,869**	**$17,395**	**$34,463**	**$27,755**
2 - Auxiliary Sys (Htg, fuel, etc)	**$2,293**	**$2,286**	**$2,288**	**$2,288**
3 - Diagnostics	**$1,475**	**$2,691**	**$2,691**	**$2,691**
4 - Power Systems	**$1,853**	**$1,855**	**$1,855**	**$1,855**
5 - Central I&C and Data Acq.	**$2,291**	**$2,374**	**$2,374**	**$2,374**
6 - Site and Facilities	**$7,768**	**$7,782**	**$6,766**	**$6,766**
7 - Machine Assembly	**$4,788**	**$4,777**	**$3,170**	**$3,170**
8 - Project Oversight & Support	**$11,402**	**$11,402**	**$11,402**	**$11,402**
9 - Pre-Op. Planning / Testing	**$260**	**$597**	**$597**	**$597**
Total, with contingency:	**$45,000**	**$51,159**	**$65,606**	**$58,899**
Average Contingency	24%	29%	32%	31%

Cost evaluation for this snapshot of configurations

- The algorithm is a work in progress and still needs some tuning.
- There are still some kinks that need to be worked out
- Why do saddle coils cost so much compared to modular coils?
- Why do 1/R TF coils and structure cost as much as modular coils and structure?

Why do modular coils cost the same as simple set of TF coils?

- Support structure cost for TF coils scaled from PDX, no design yet
- TF costs based on 3.5 kA/cm^2, we can probably go to 5 kA/cm^2

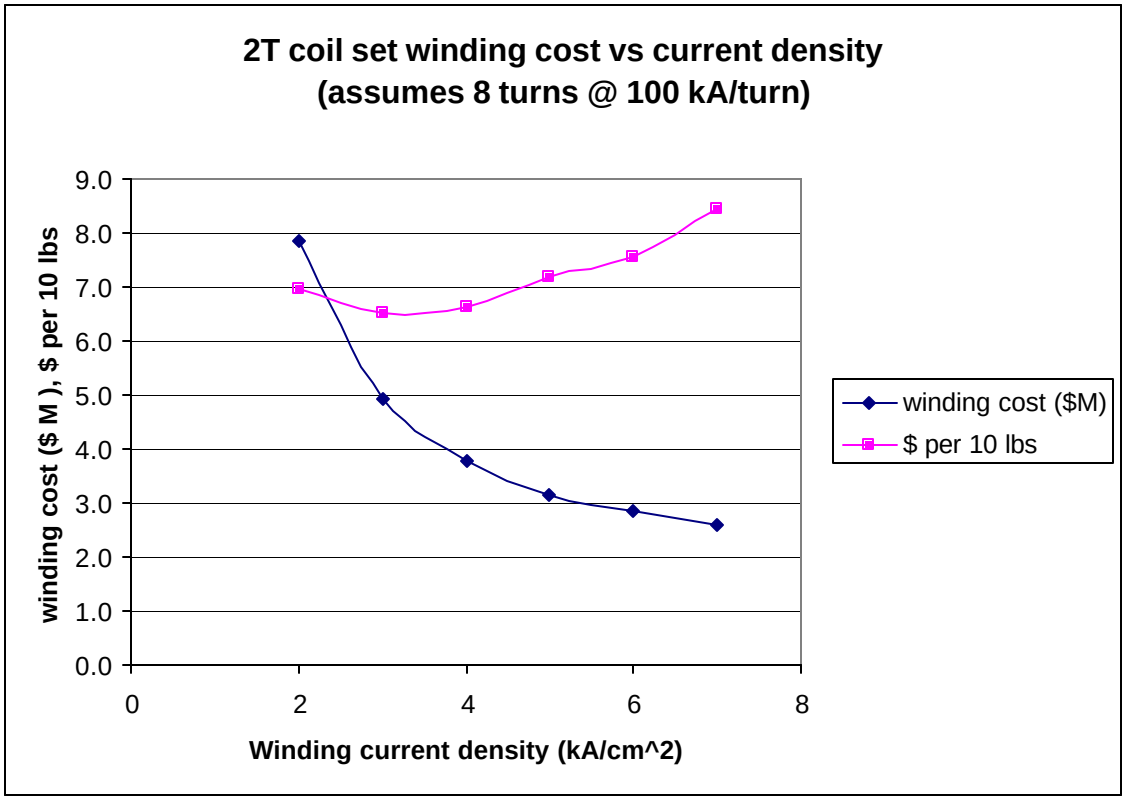

Scaling: How do options scale with major radius?

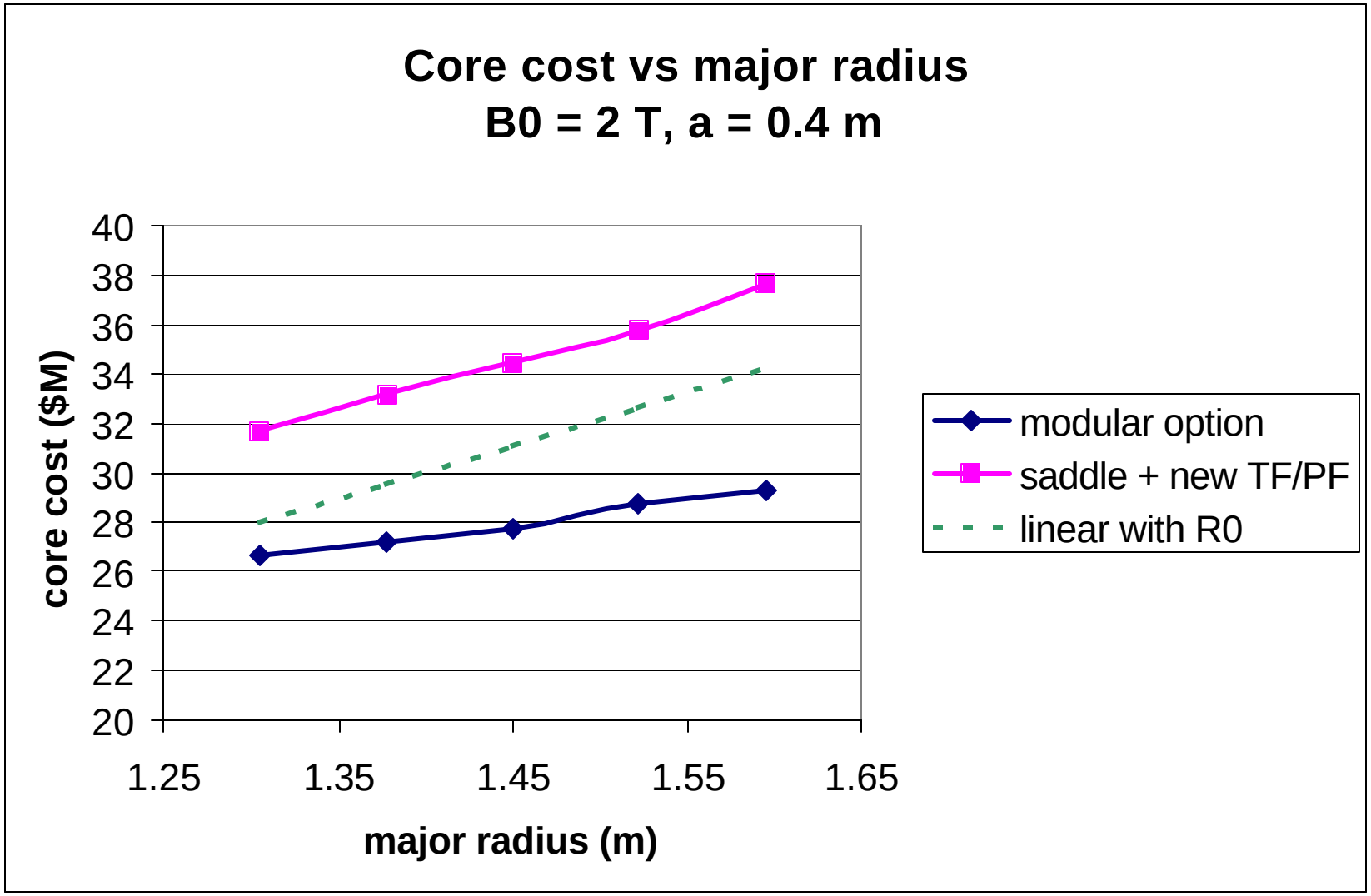

Scaling: How do options scale with toroidal field?

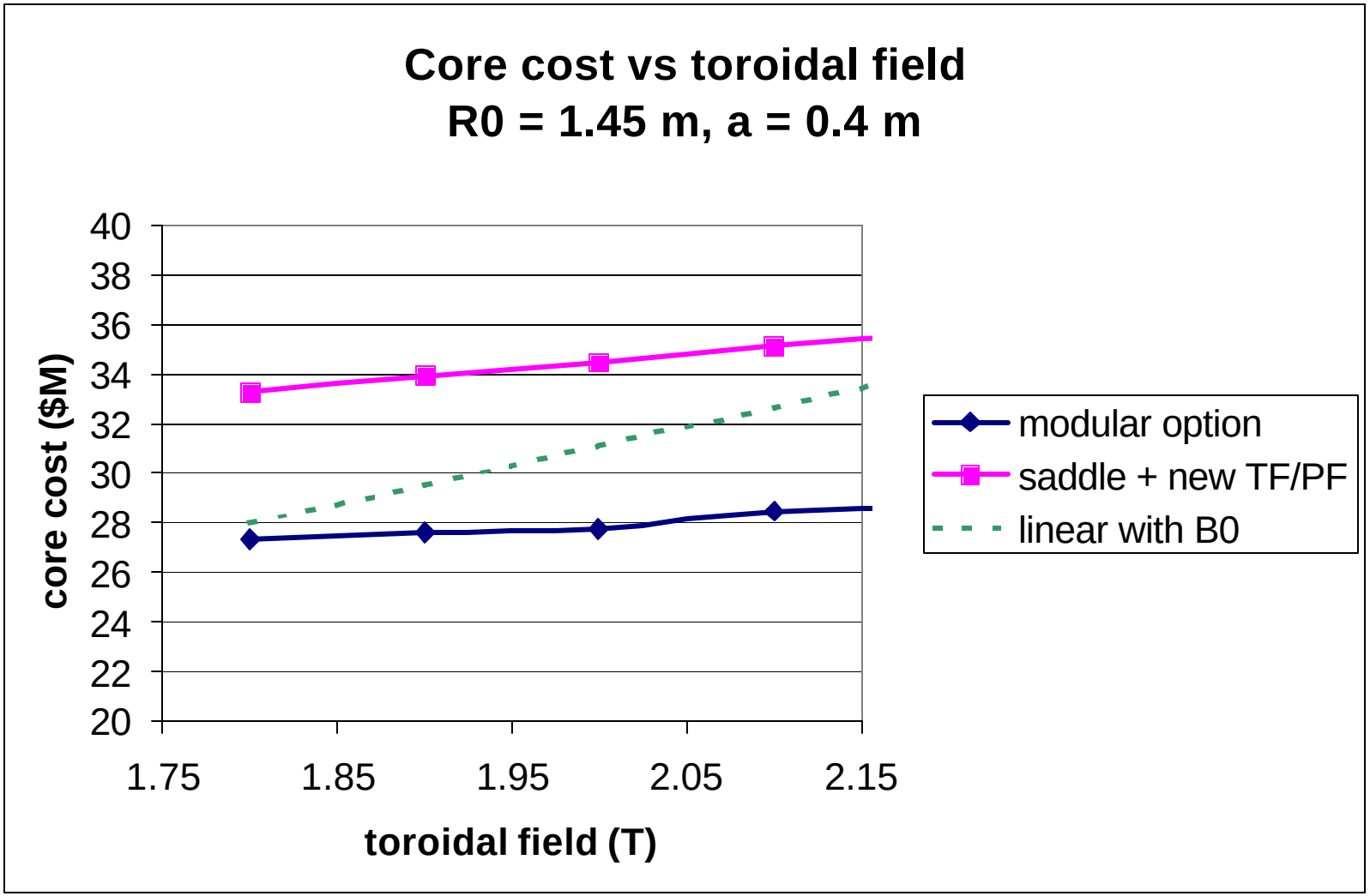

Cost Algorithm Questions and Issues

- Main issue is defining and including all the cost elements. This requires additional design, which should still be the focus near term.

- Secondary issue is including all the cost drivers, or variables that discriminate one configuration from another, and which could provide some scaling information

- Contingency is a major cost driver: are chosen values realistic?

- Finally, the cost algorithm should be reviewed again by interested parties

Cost summary

- **Are we reaching goal?**
  - What is relative cost of options? ~$55M +/- $10M
  - Are cost differences among options significant? New coils cost more
  - Can any cost savings be identified? Cryostat, meas. system
- **Status:**
  - Identified Cost Drivers / Discriminators
  - Cost algorithm framework developed with scaling of R0, Bo, a
  - Cost estimates updated for in-PBX option, and developed for two more configuration options, (but early answers are a little puzzling)
  - Need to keep tuning the modules, resolve questions