SADDLE COIL OPTION Machine Configuration, Fabrication and Assembly

Tom Brown (PPPL)

September 26-27, 2000

NCSX Saddle Coil Option Presentation Outline

- **Review the basic configuration concept.**
- **Define device assembly approach.**
- **Define key component design features and fabrication methods.**
- **Highlight configuration issues.**

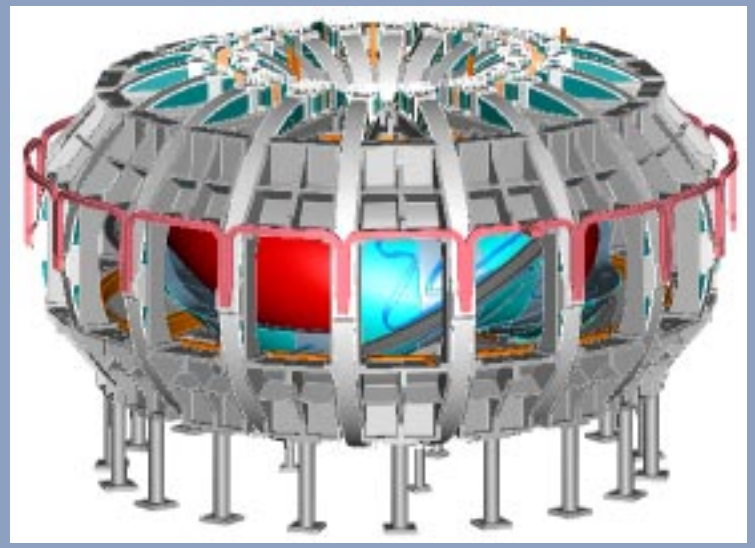

NCSX Saddle Coil Option
Basic Features

- **Saddle coils wound in groves in a structural core.**
- **18 external (jointed) TF coils.**
- **Internal PF/OH coils.**
- **Large horizontal and vertical access areas.**
- **An L=3 coil set added for flexibility.**

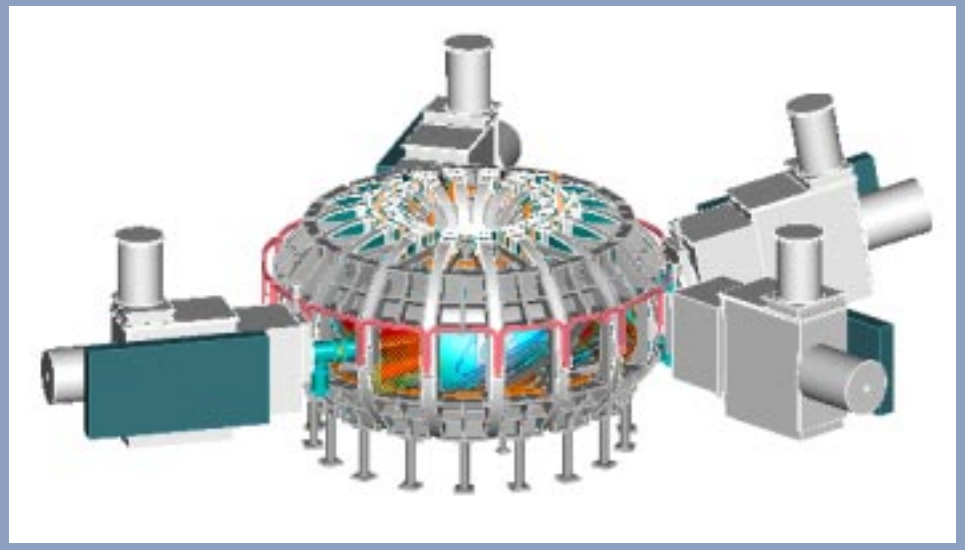

NCSX Saddle Coil Option Core Configuration

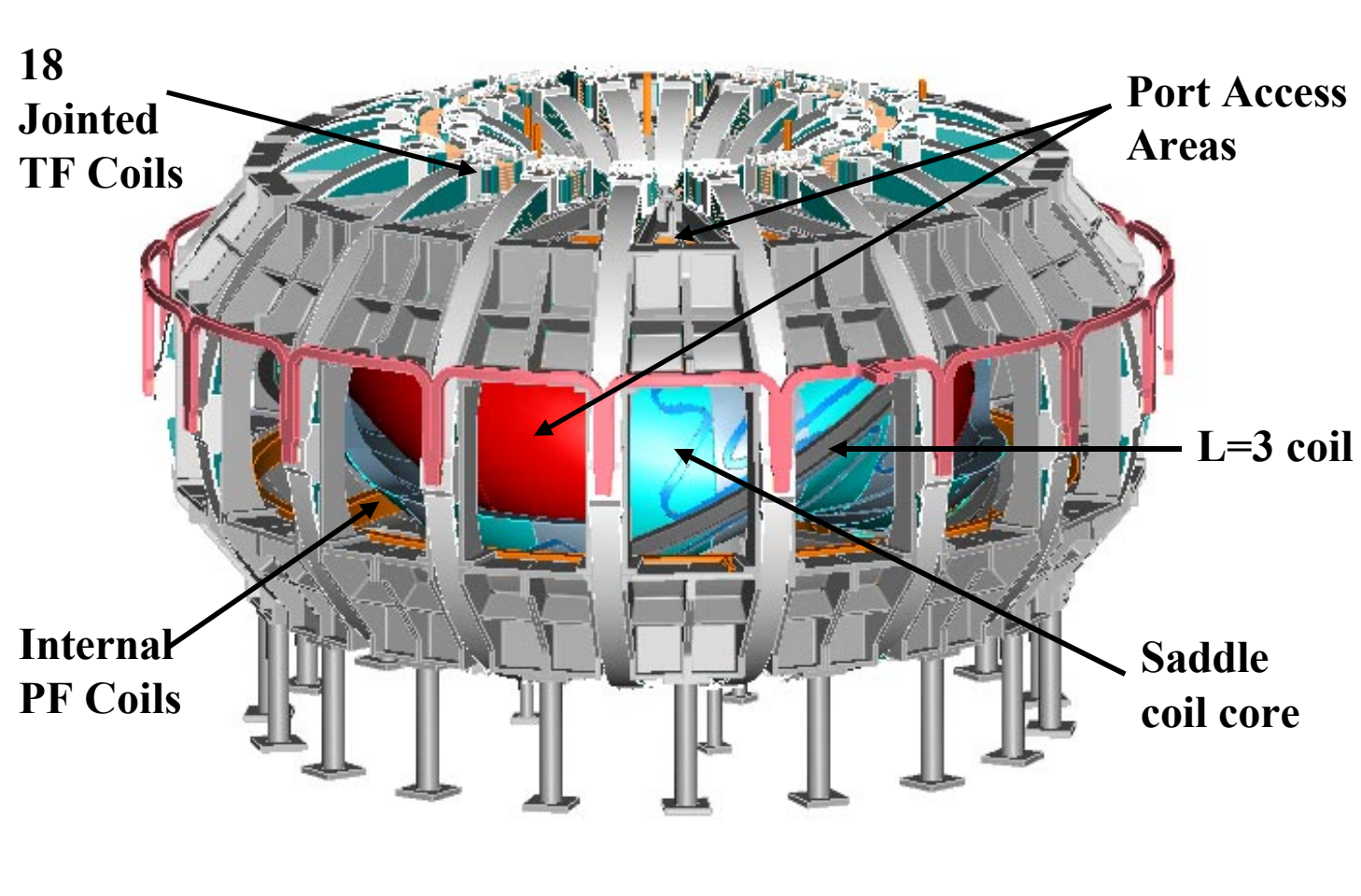

NCSX Saddle Coil Option - Assembly

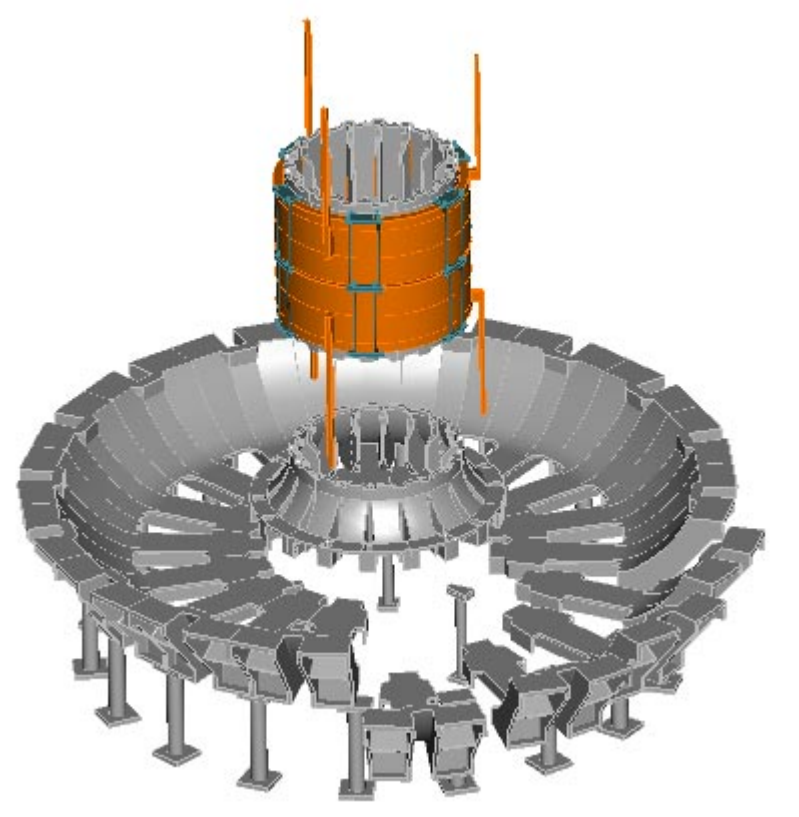

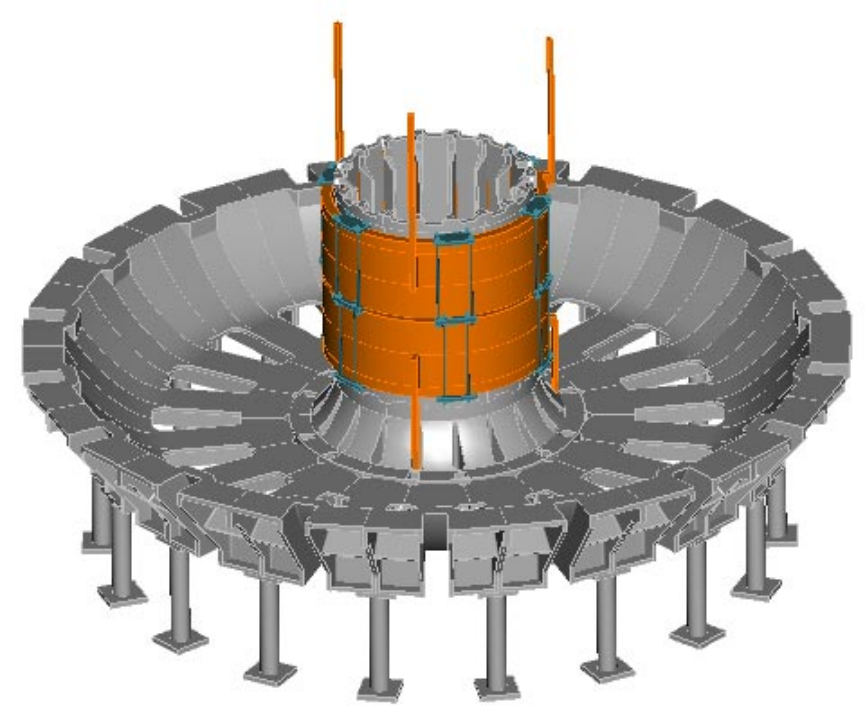

Base structure and central PF assembly

Completed base structure, solenoid and lower PF coils.

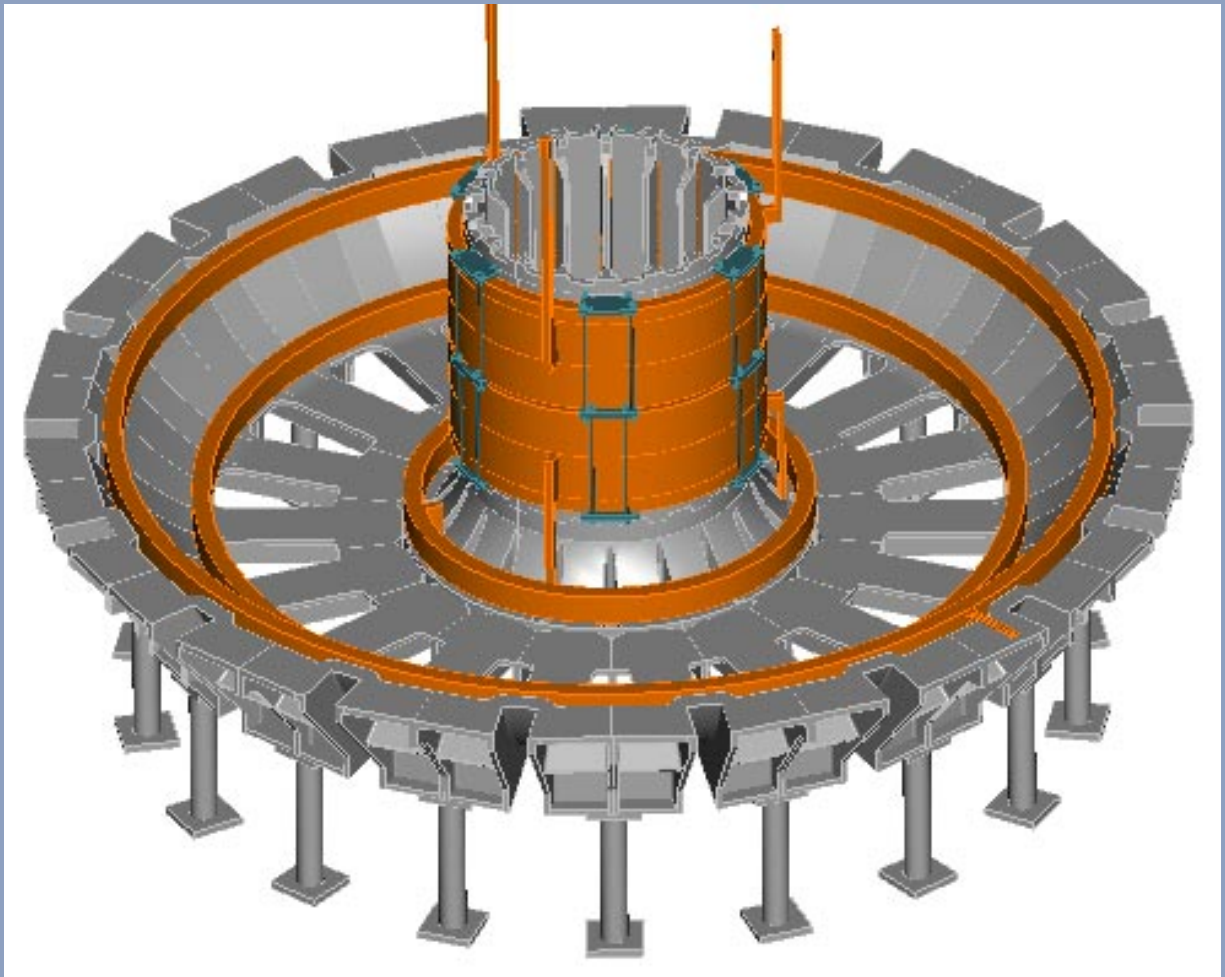

Saddle coil core assembly

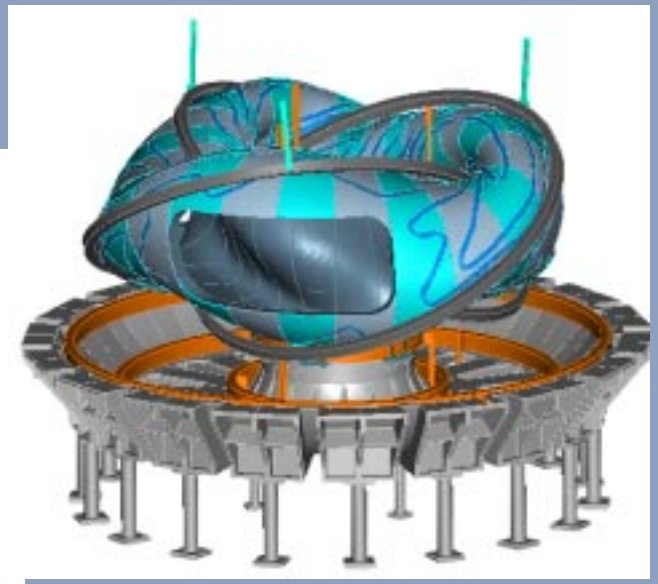

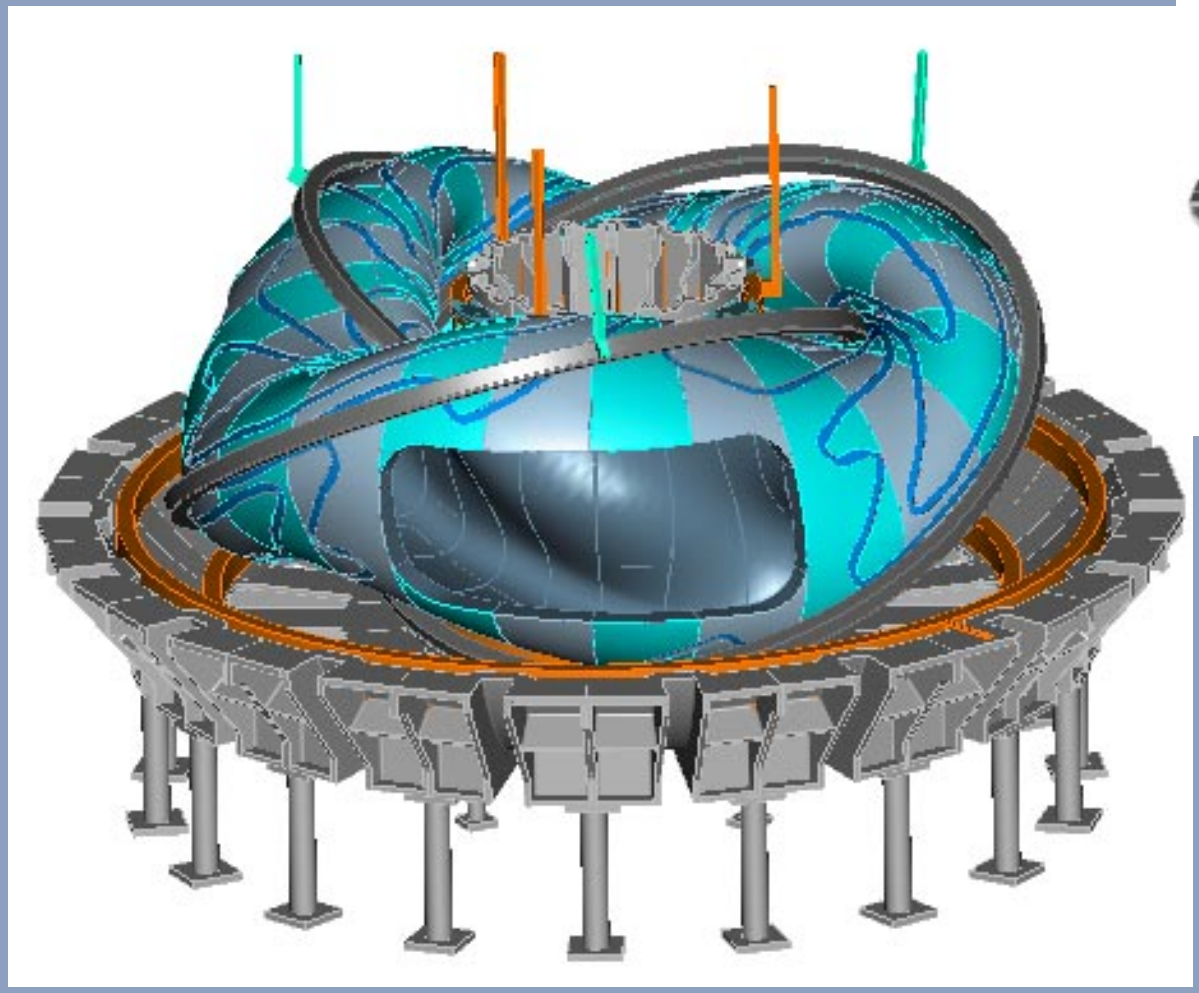

The stellarator core is expected to weigh less than 50 tons

Saddle Coil Plan View

Assembly of outboard vertical supports and center shell upper ring.

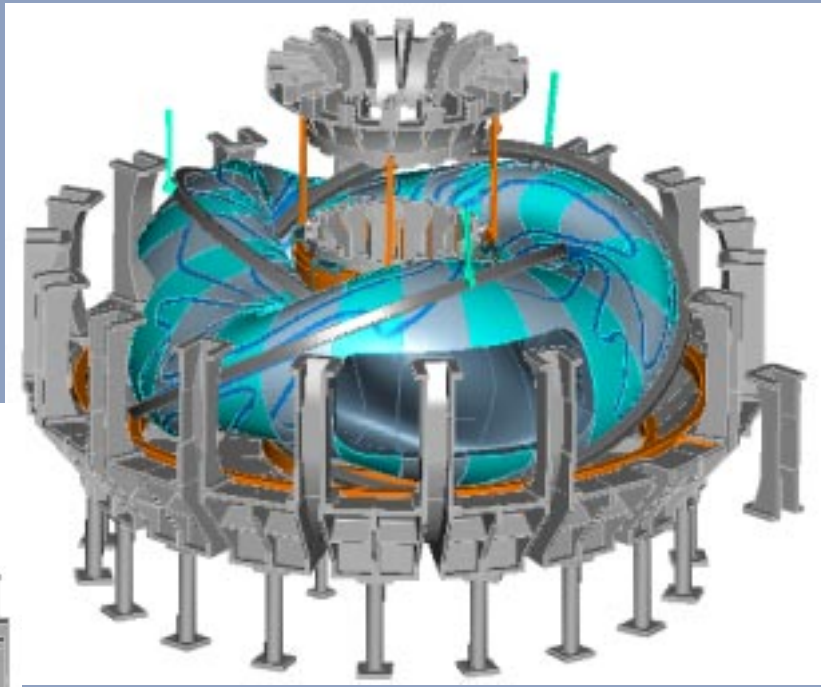

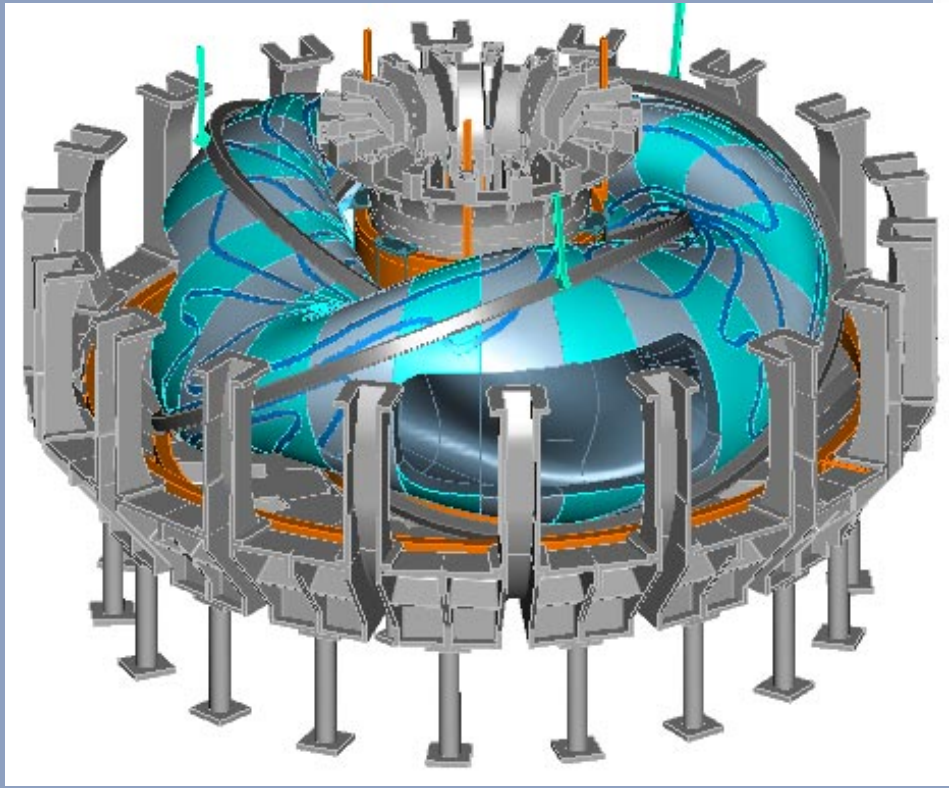

Upper shell /PF ring coil support assembly.

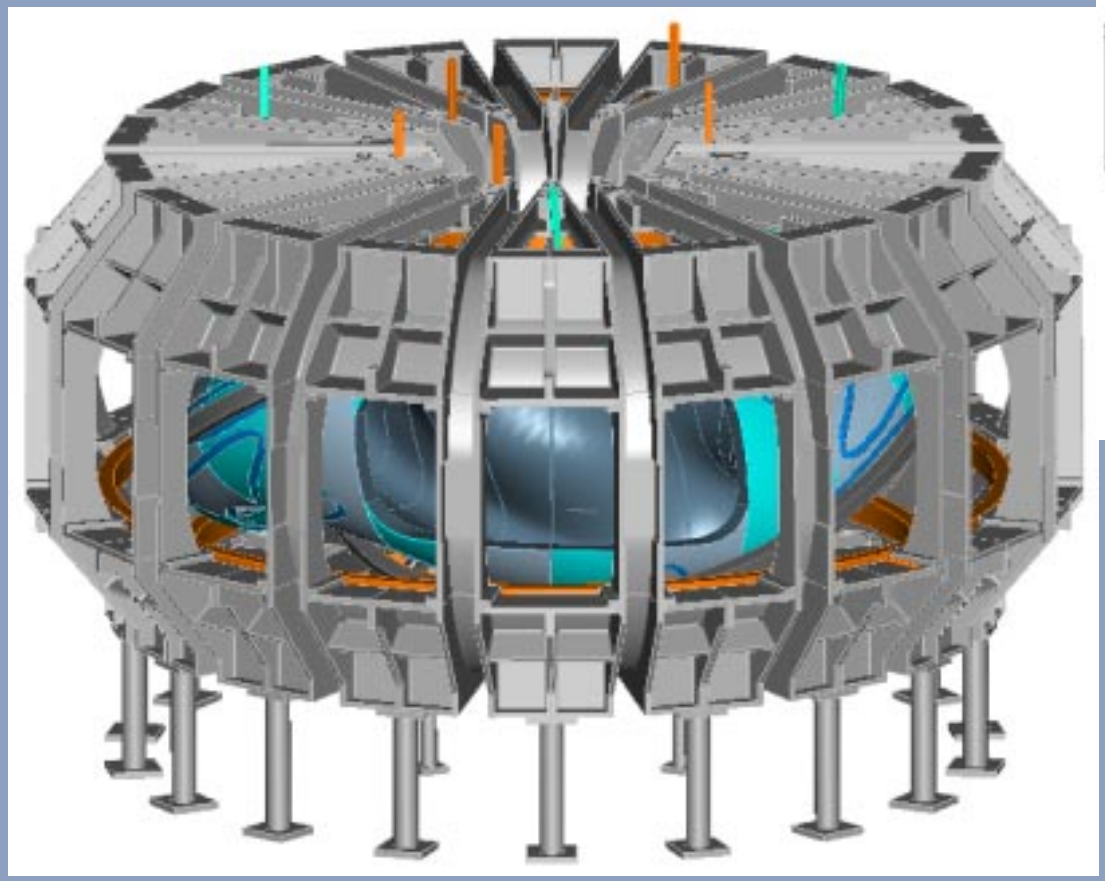

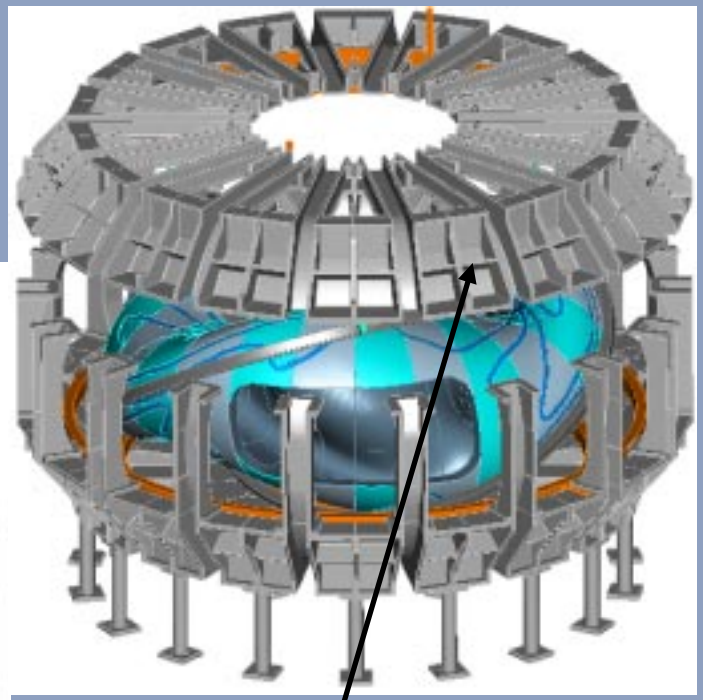

21.7 tons

TF coil assembly.

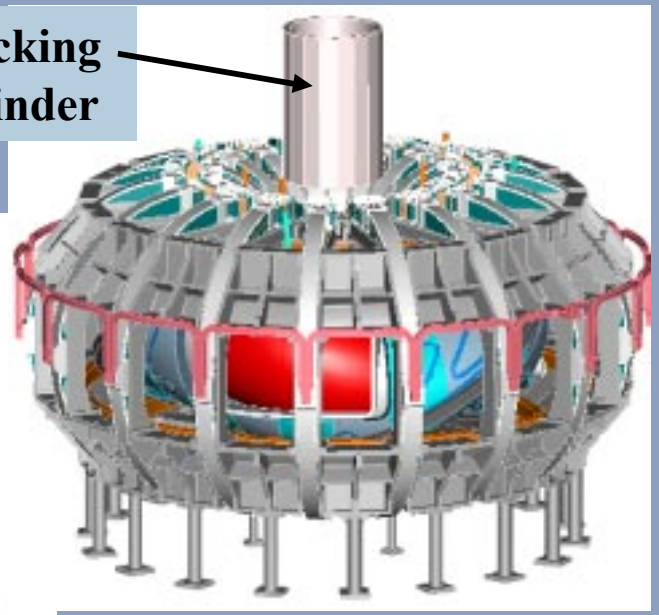

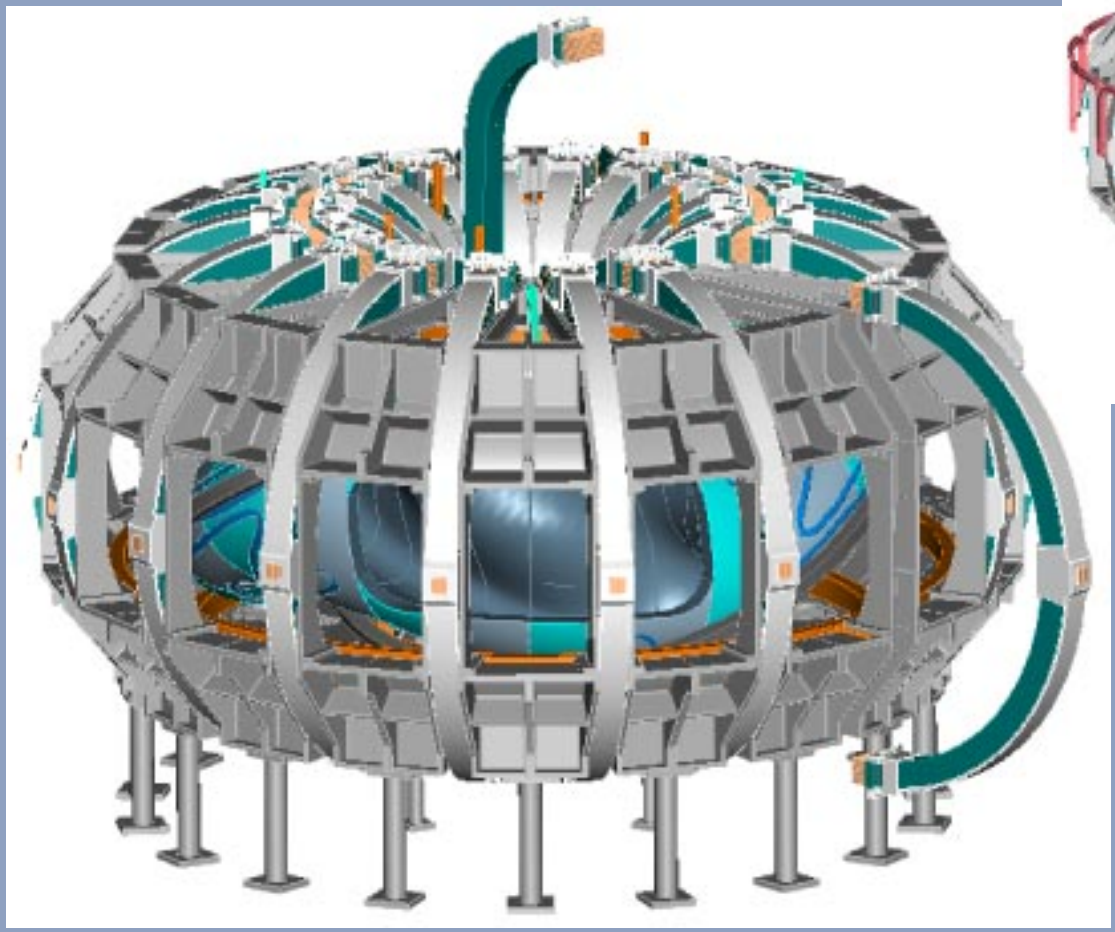

Mechanical Arrangement

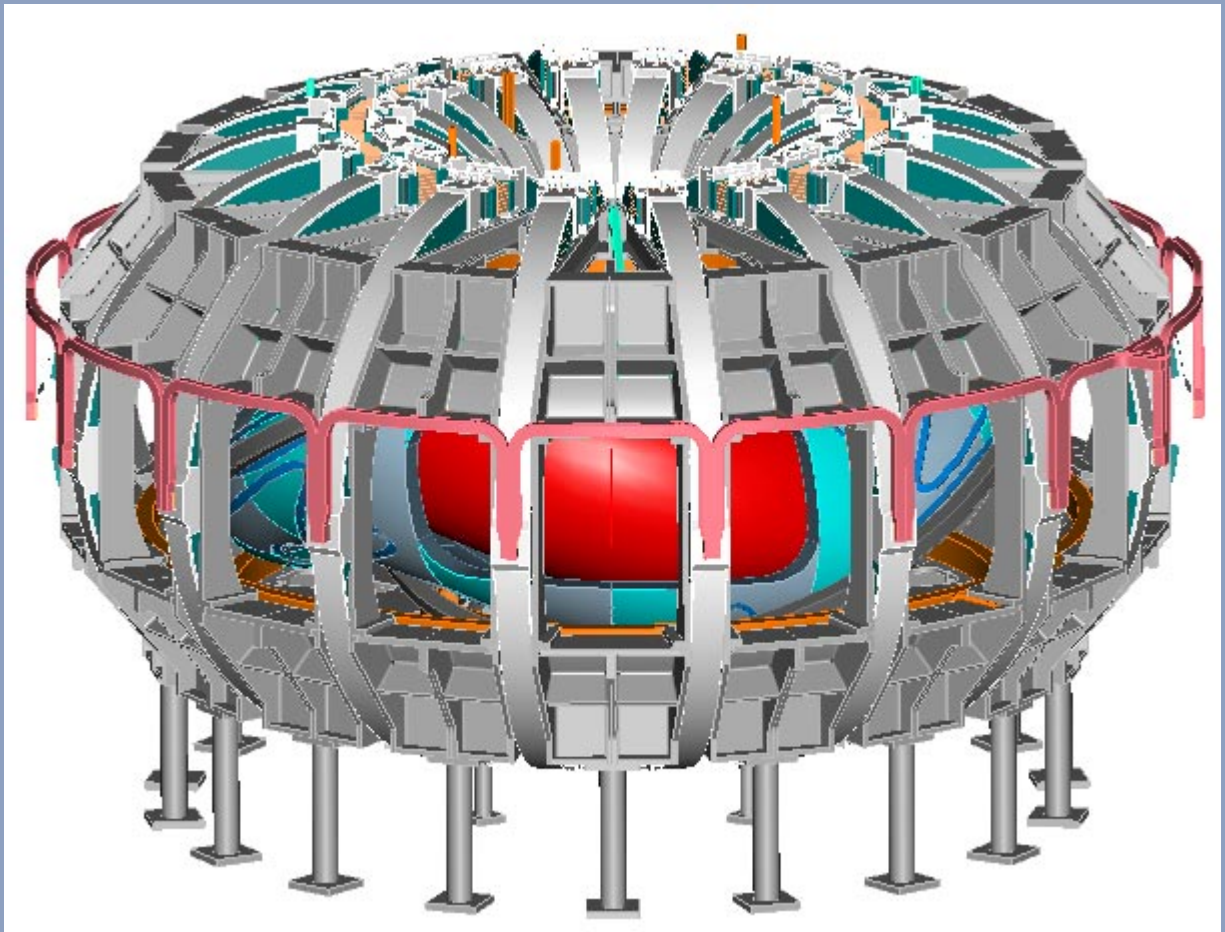

Why External TF coils and Internal PF coils?

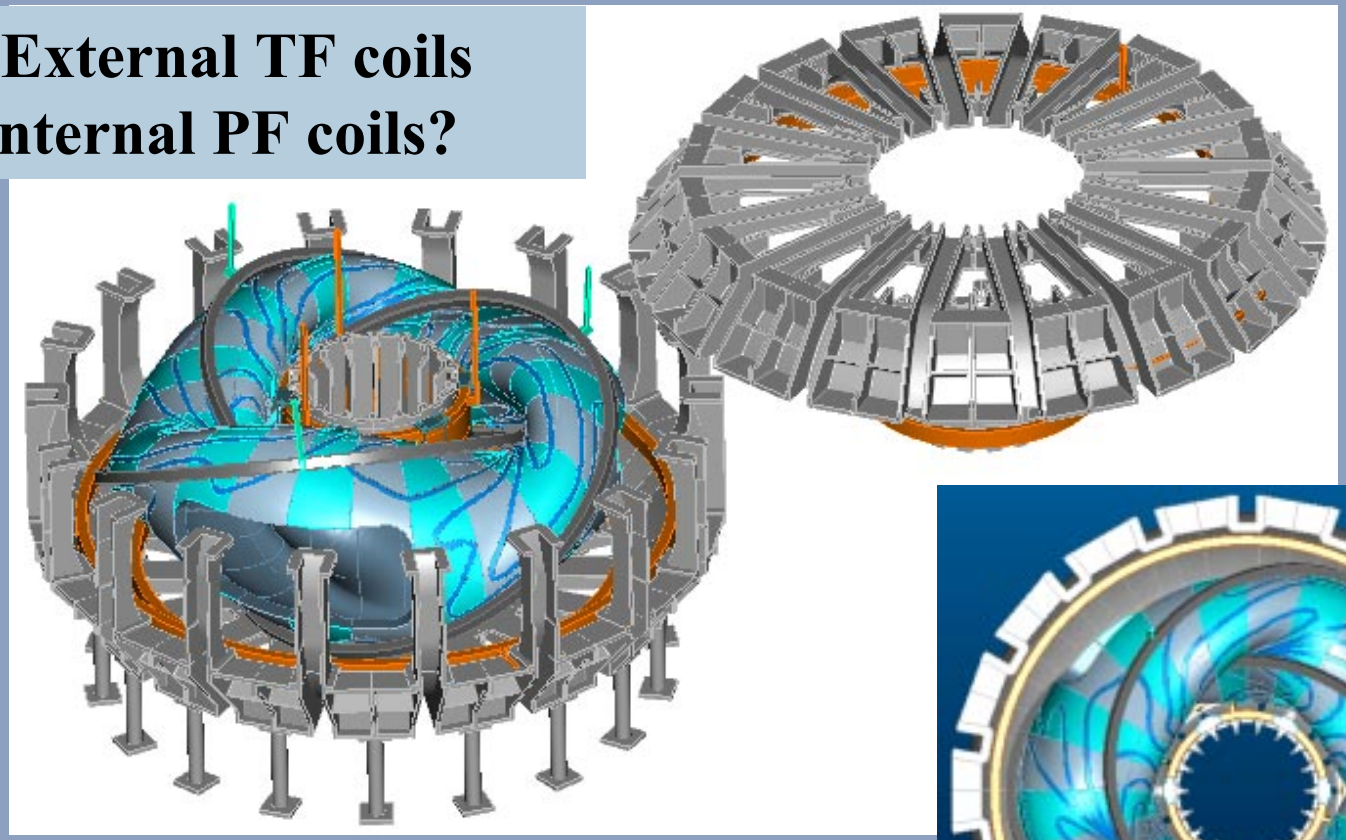

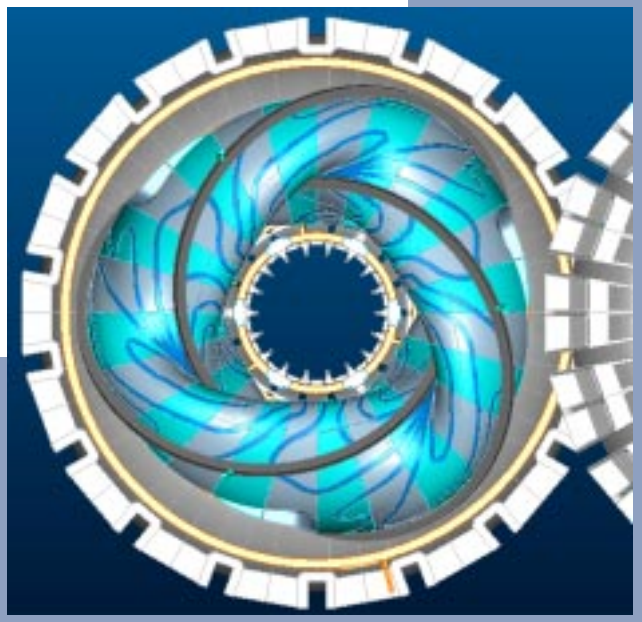

- Machine access and ripple favors few TF coils with back legs away from the device core
- To assemble the stellarator core TF coils require joints
- Internal PF coils are more efficient, lower currents
- With internal PF coils a large portion of the PF coils and machine structure can be assembled early
- "IF" a stellarator core needs repair or replacement the machine disassembly is minimized

Machine Cross-Section View

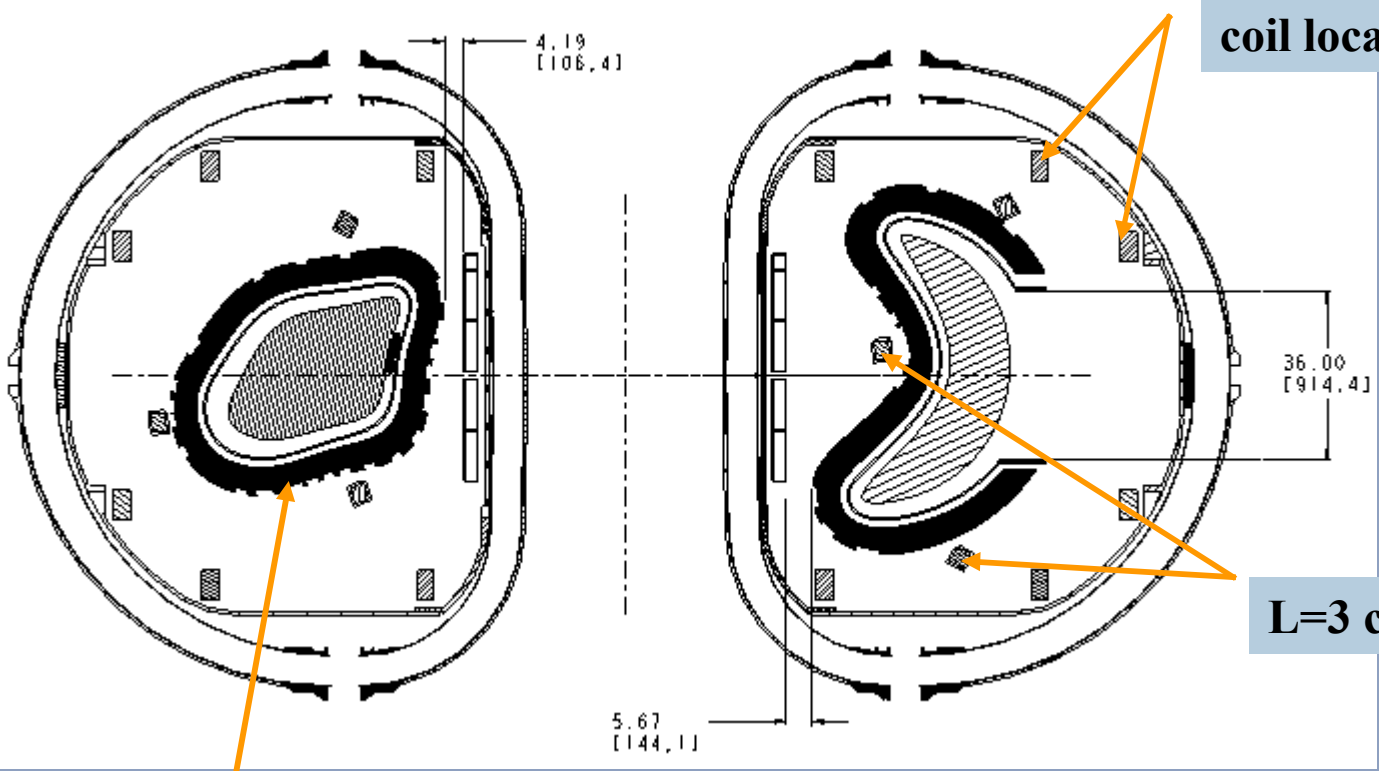

Internal PF coil locations

L=3 coil

Stellarator core

Vacuum Vessel Details

Vacuum Vessel

- **Vessel is stand-alone structure bake-able to 350C**
- **Parameters**

Material	Inconel 625
Weight	8300 lbs
Outer radius	~ 2 m
Height	~ 1.7 m
Wall thickness	~ 1 cm
Contour tolerance	+/- 5 mm
Inside surf area	~ 37 m^2
Enclosed volume	~ 6 m^3

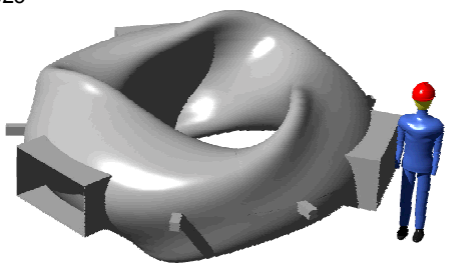

Vessel fabrication options

- **Press-forming is preferred option**
  - **Only 3 segment shapes required**
  - **Explosive forming a possible variant**

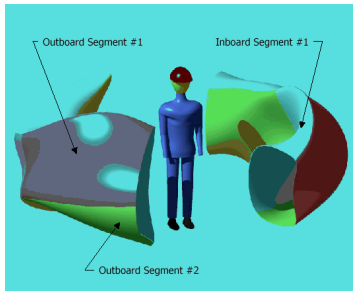

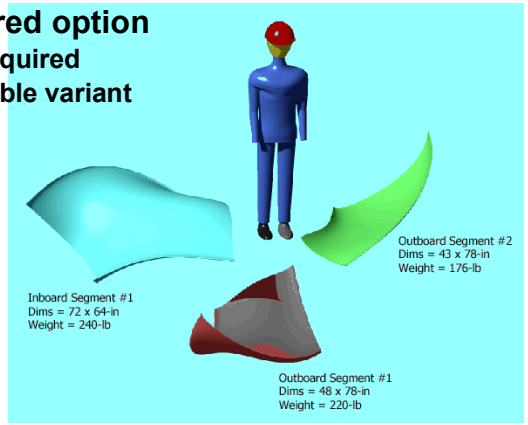

- **Brake-bending (ala W7-AS) possible but requires too much welding**

Stellarator Shell

Shell / VV assembly

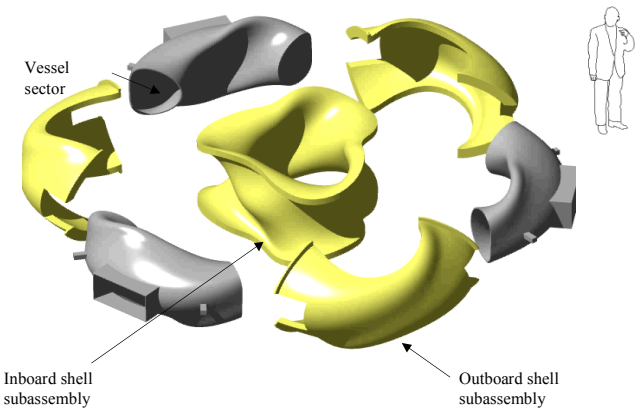

OAK RIDGE NATIONAL LABORATORY
U. S. DEPARTMENT OF ENERGY

UT-BATTELLE

- Cast Nickel-Al-Bronze structure, 48 segments,

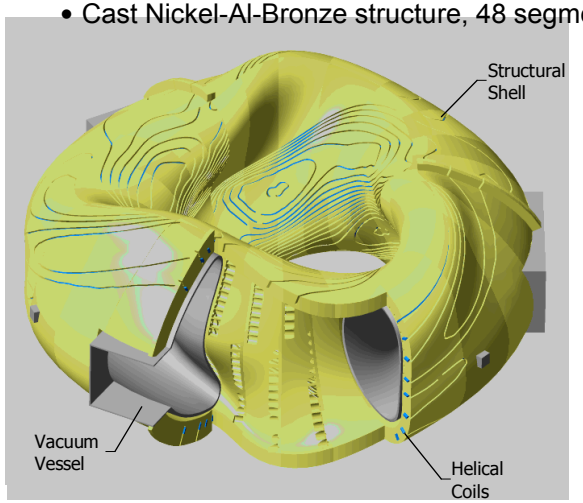

Core Assembly

Leads and thermal insulation

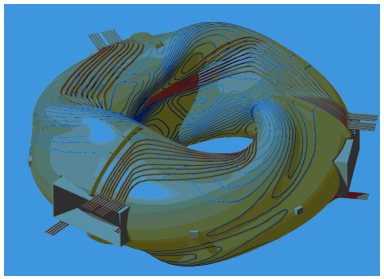

Saddle coils wound on shell

coaxial lead for each coil installed

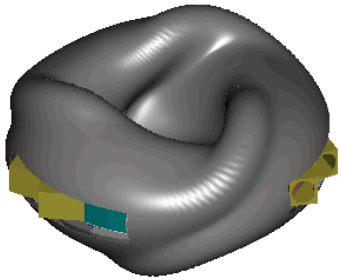

Thermal insulation sprayed over shell

(7 cm polyurethane with butyl rubber vapor barrier)

TF System

- 18 coils
- B_0=2 T @R_0=1.68 m
- .93 Ma / coil
- 12 Turns/coil; double pancake
- Bucked support
- B_{max} @ inbd leg=5.2 T
- Winding Cd = 3444 A/cm^2
- Joint Cd = 4367 A/cm^2

TF joint details will follow past experiences (Doublet III, ISX)

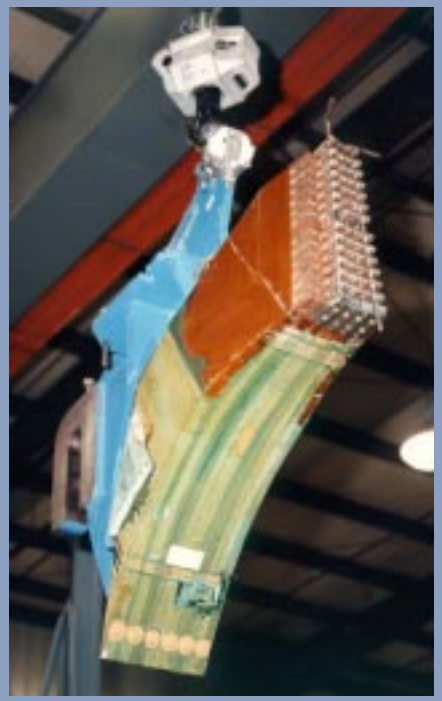

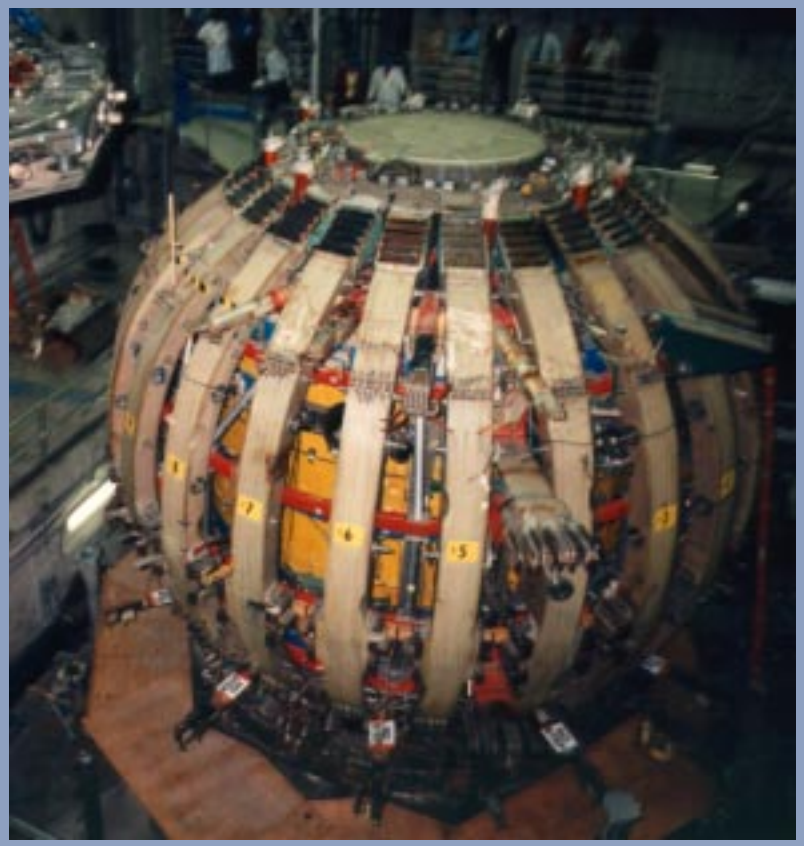

TF Coil Details

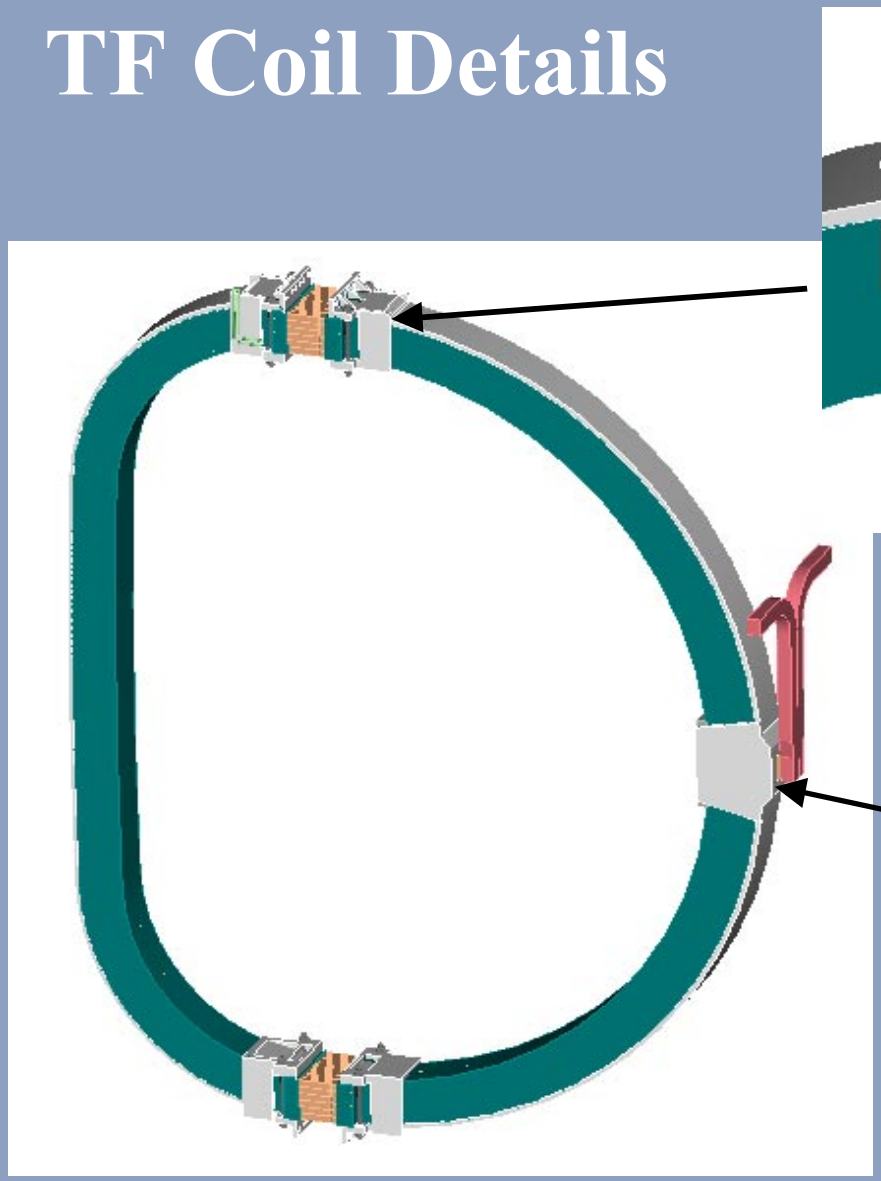

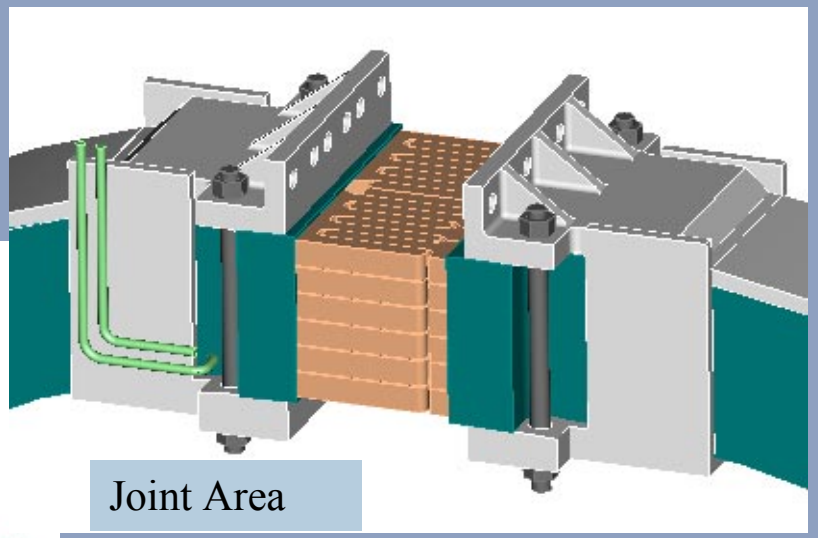

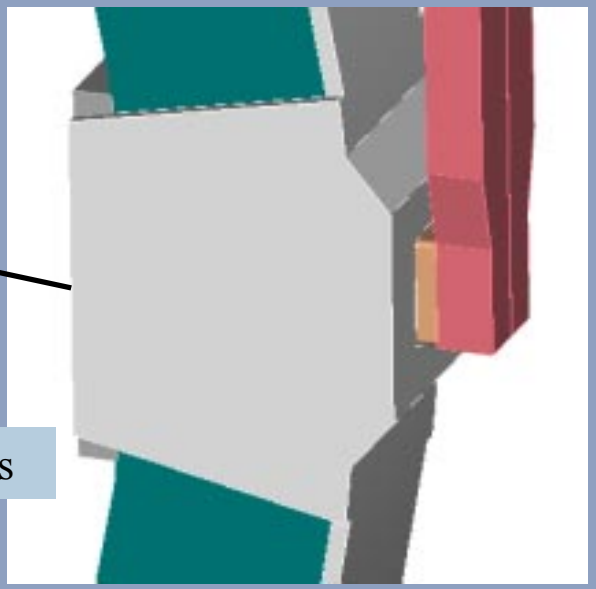

TF Assembly Exploded View

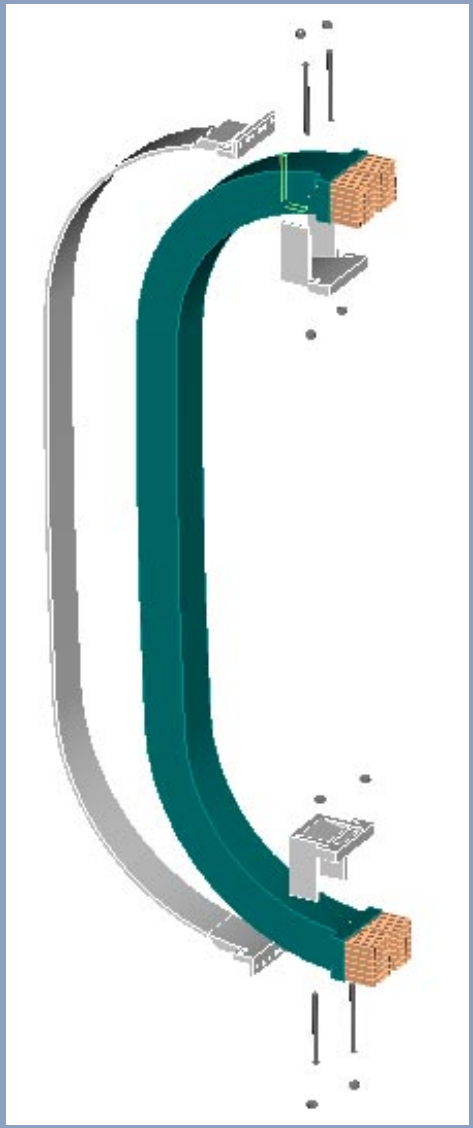

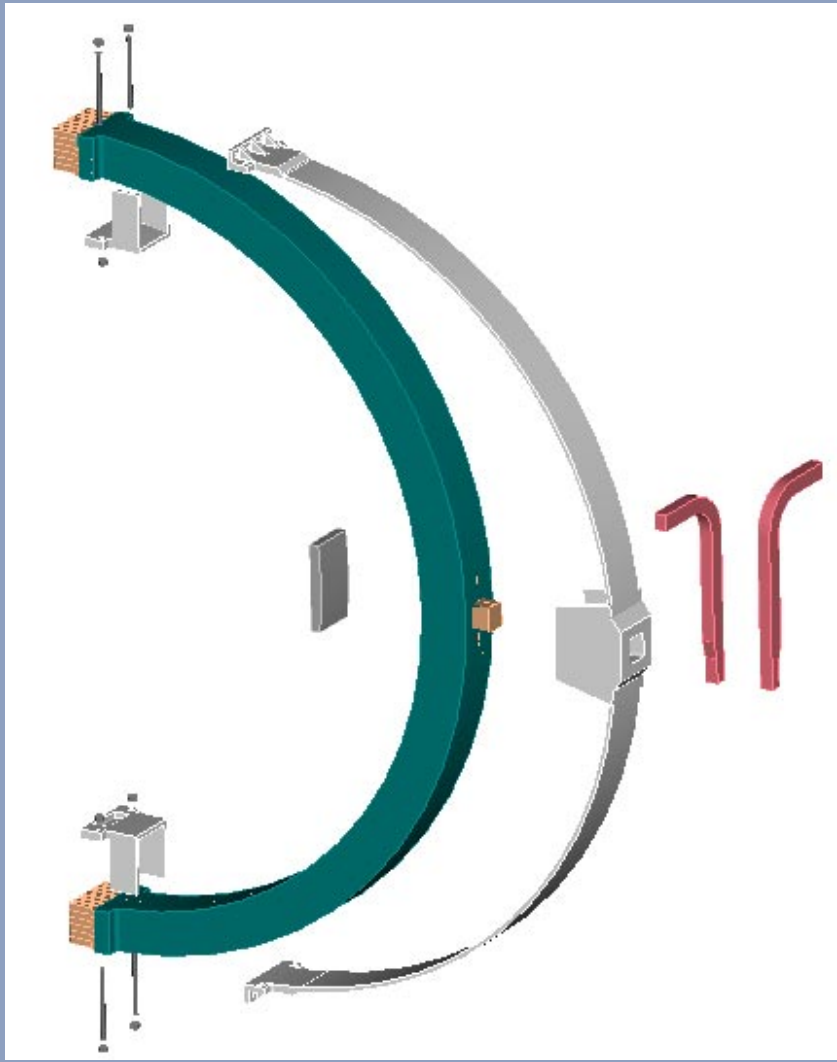

TF Winding and Termination Detail

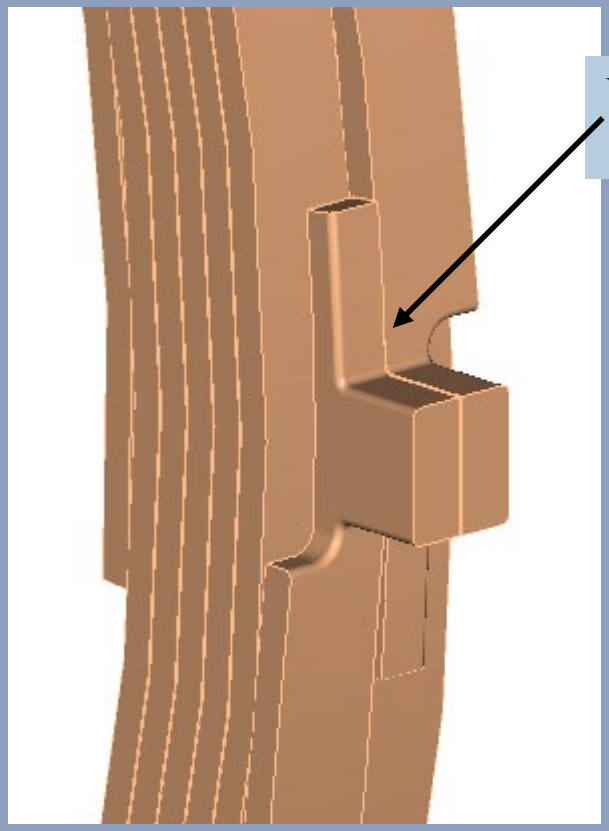

Winding termination detail

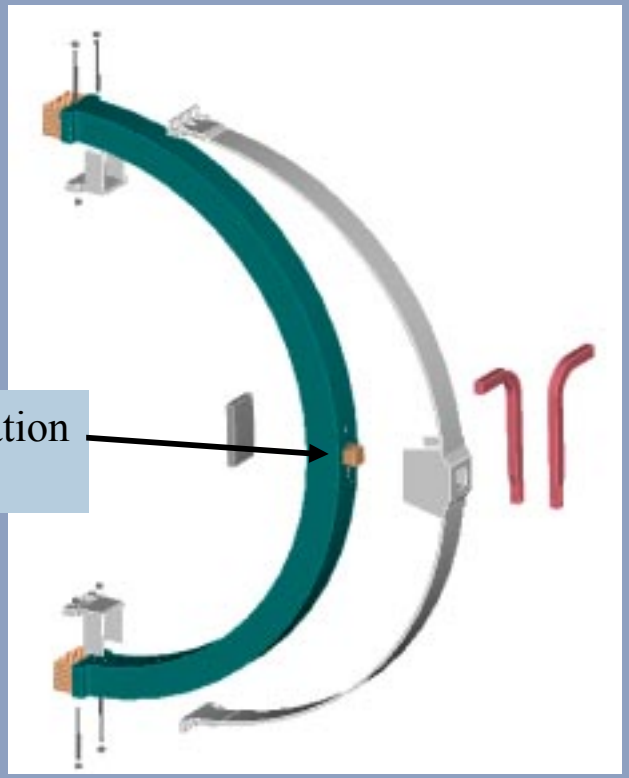

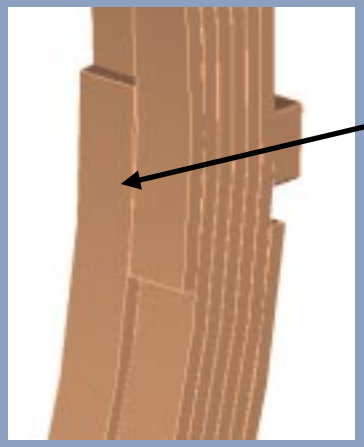

Winding cross-over

Magnetic force on element centers (Nt)

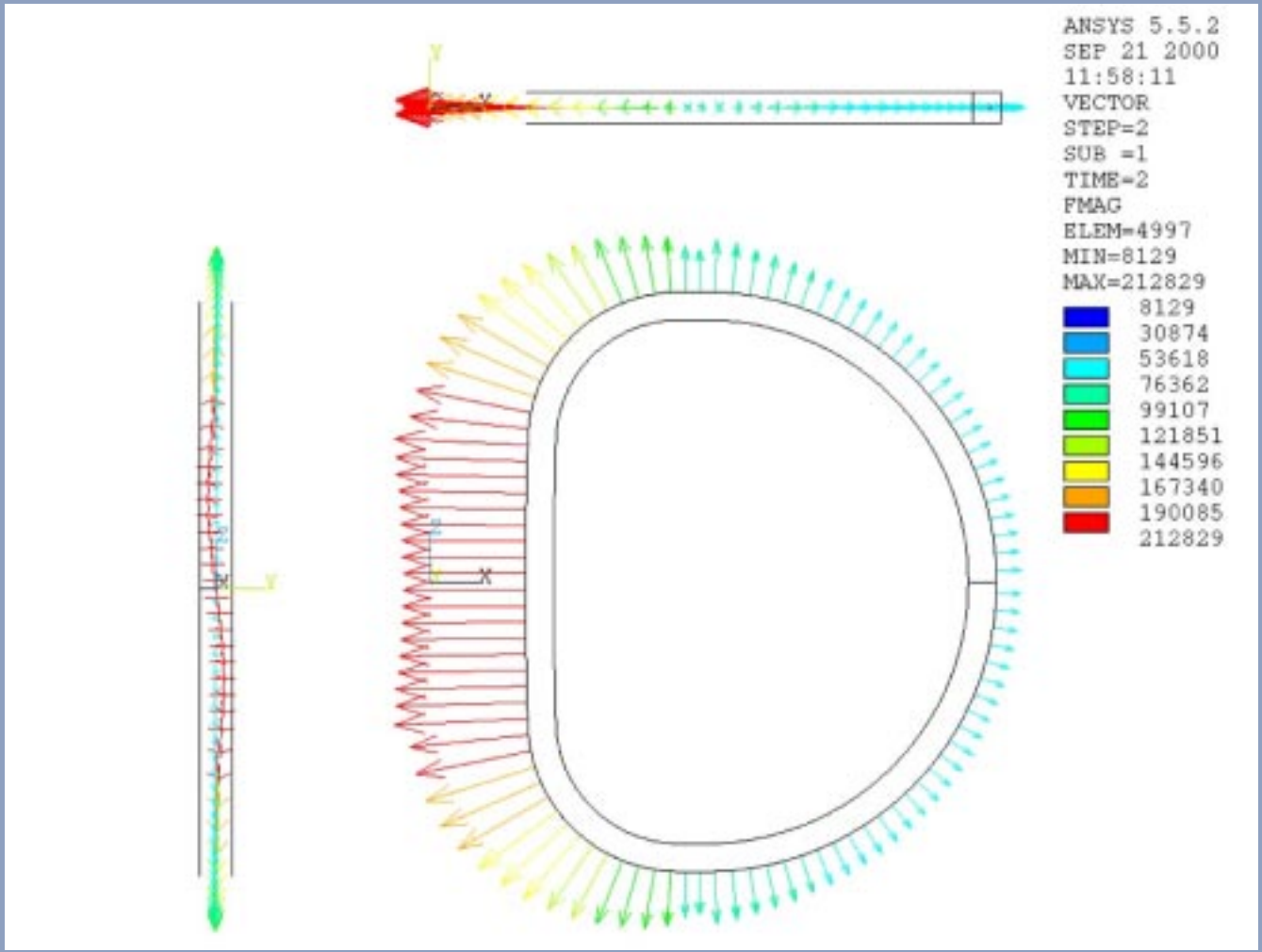

Machine Support Details

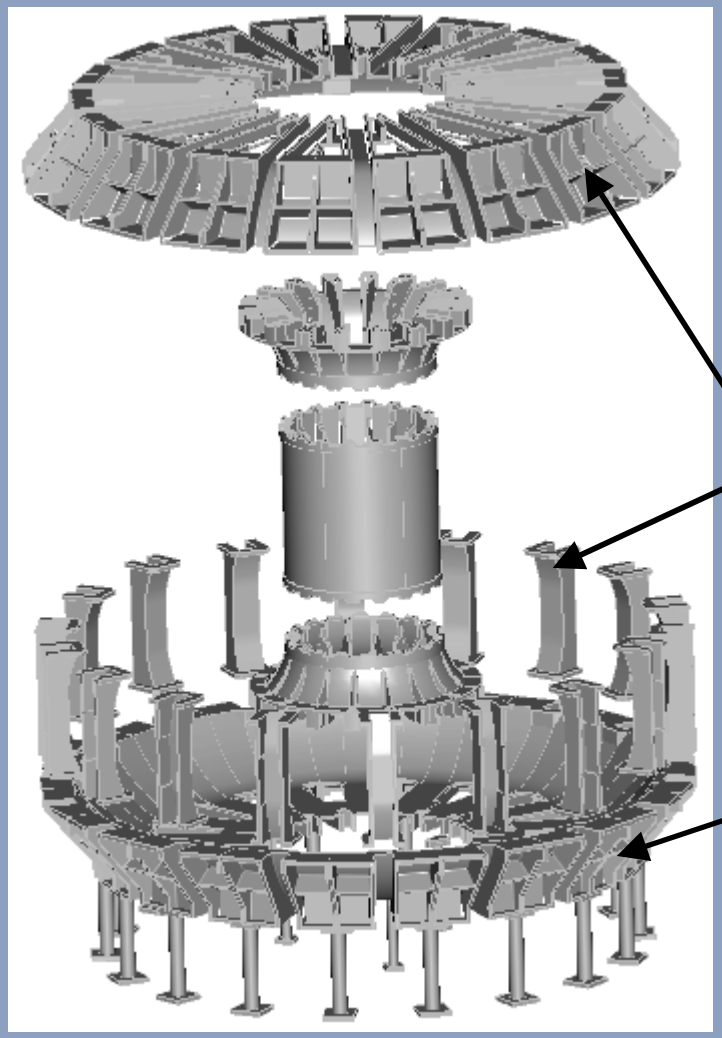

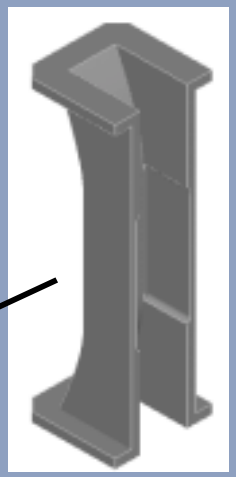

511 lbs (18)

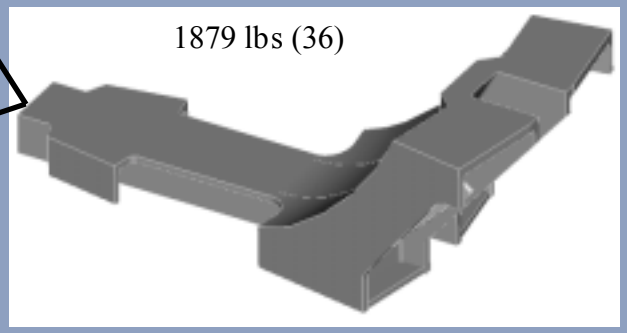

Center Shell Support Structure Details

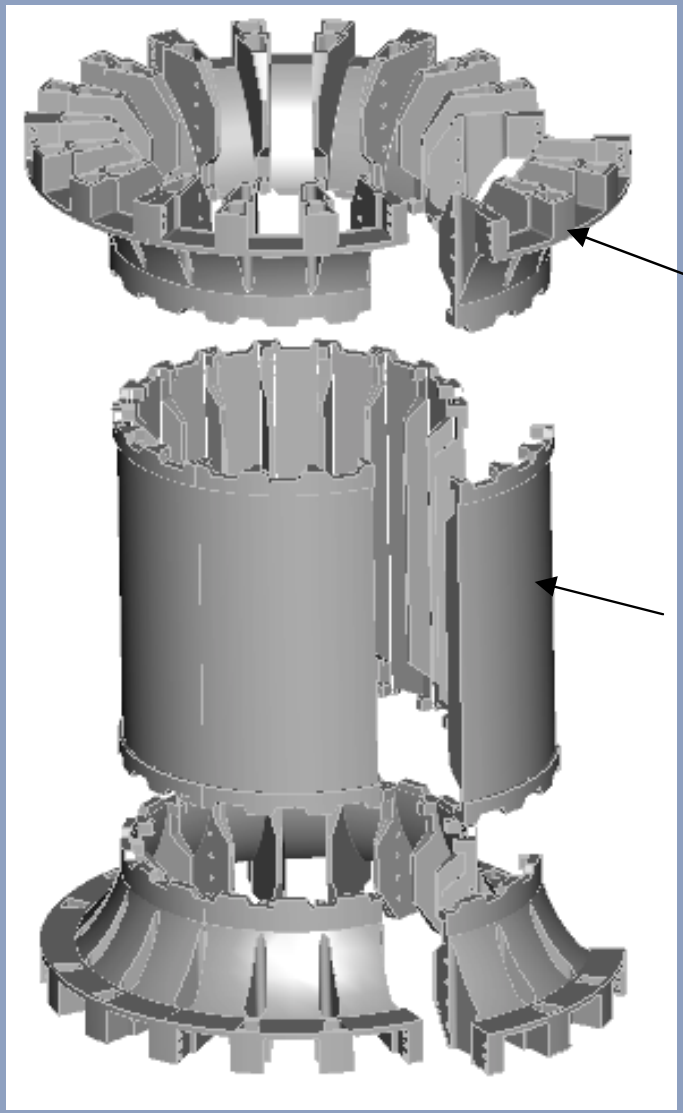

633 lbs (6 in upper ring, 6 in lower ring)

828 lbs (6)

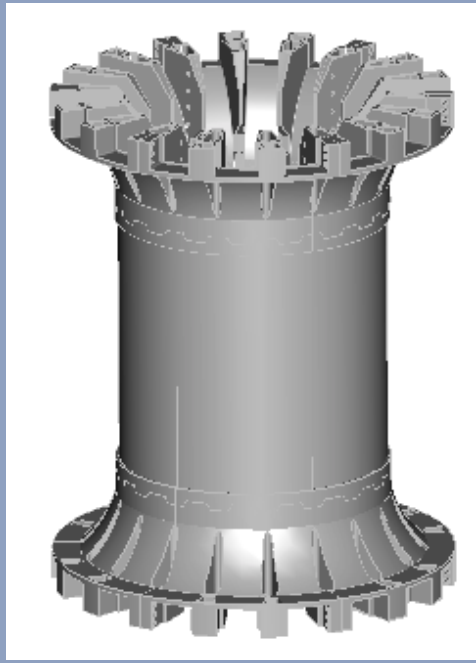

Configuration Summary

A saddle coil configuration has been developed . . .

- No technical "show stoppers" have been uncovered
- Access for NBI and diagnostics can be met
- Component support requirements appear feasible
- The modular arrangement of the support system, internal PF coils and extensive use of castings all promote a minimum cost system to house the experimental stellarator core.

The saddle coil option is ready to begin the next step in the process of design development and component analysis ……