Preliminary Fabrication Recommendations for the NCSX Saddle and Modular Stellarator Designs

Phil Heitzenroeder, Tom Brown, Wayne Reiersen (PPPL),
Brad Nelson, Dave Williamson, Mike Cole, Paul Goranson (ORNL)

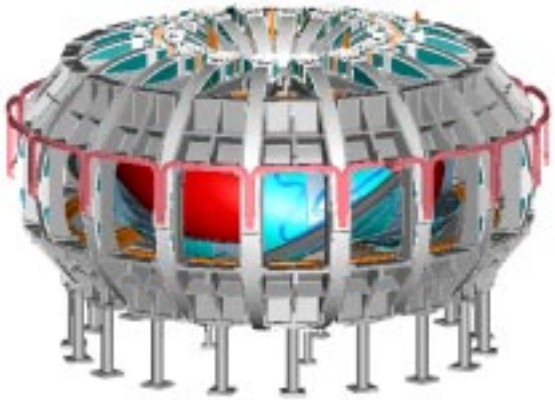

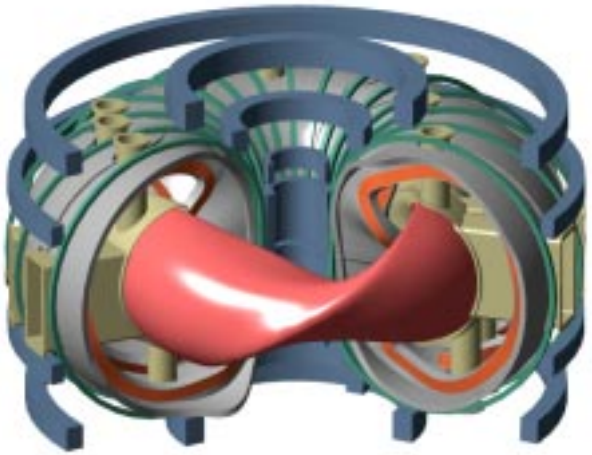

Stellarator Fabrication

- **Challenging because of highly shaped parts and the need to accurately position the windings.**
  - Geometry does not lend itself very well to conventional 2D drawings and manufacturing techniques.
- We propose the maximum use of castings to address these challenges.
  - CAD files will be used to make rapid prototypes or to drive CNC milling machines to make casting molds.
    - Modern casting design/fabrication is a streamlined process. We expect a significant reduction in the design effort.
    - Casting permits additional design freedom
      - Easy to cast in features such as corner reinforcements, gussets, support points, etc.
    - Once the mold is certified, the results are repeatable.

Castings Are Being Considered for All Major Machine Components

Saddle Design	Modular Design
•**Machine Structure-**ie, gravity supports, machine base, etc. (aluminum –stress permitting, or stainless steel)	•**Machine Structure** – ie, gravity supports, machine base, etc. (aluminum (if stress is OK), or stainless steel)
•**Conformal shell** (aluminum bronze, stainless steel, or Inconel)	•**Modular coil cases / integral intercoil structure** (aluminum (if stress is OK, stainless steel, or Inconel)
•**Vacuum vessel** • (stainless steel or Inconel)	•**Vacuum vessel** (stainless steel or Inconel)

Basic Fabrication Requirements

- Good dimensional control
  - windings within +/- 1 mm
  - As cast surfaces of helical support structure +/- 3mm
- Adequate strength
  - Not expected to be challenging due to modest fields.
- Circulating currents must be low or have a short time constant.
  - Two possible options:
    - (1) provide electrical breaks in structure;
    - (2) fabricate from material with sufficiently high resistivity.
- Fabrication methods must be schedule and cost effective.
- Risk will be a major factor in selecting the option.

Saddle Machine Overview

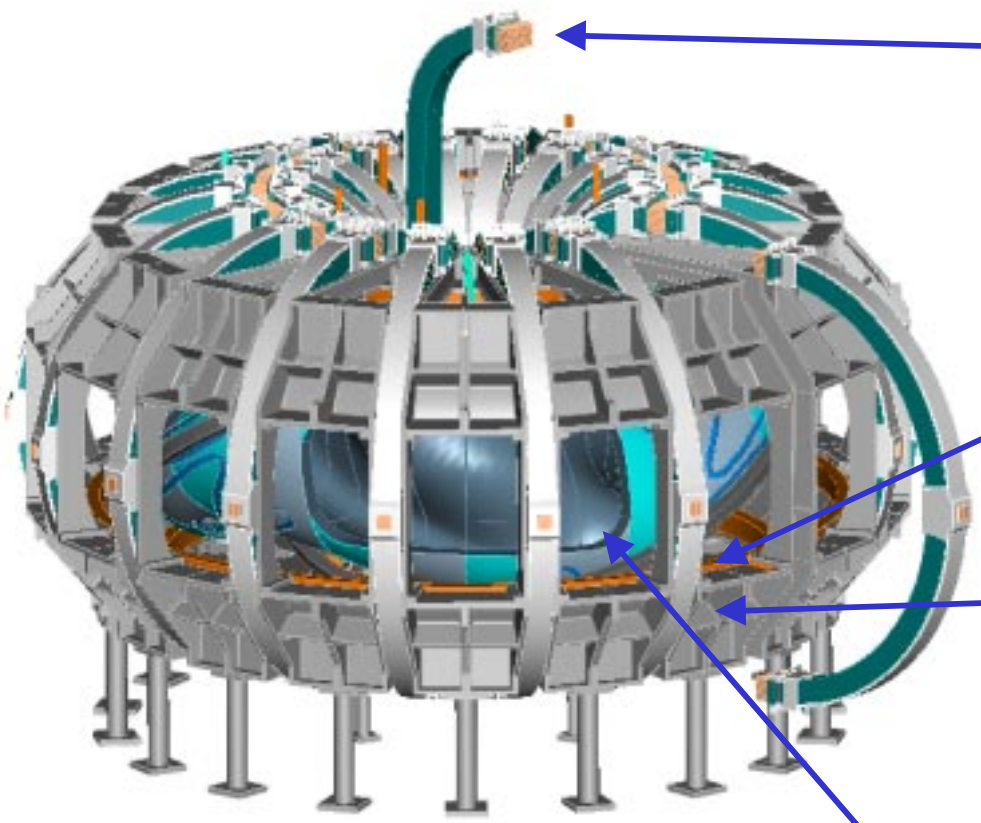

Jointed TF coil (DIIID type finger joints) slid into support structure

Internal PF coils

Modular machine structure (castings or weldments)

Saddle winding / VV assembly

Vacuum Vessel Forming Options

General vessel design except for segmentation is the same for both options. The saddle option will be fabricated from 3 segments; the modular option will require 6 or more segments to allow the modular coils to be "slid" into place.

- Press forming (ex: automobiles)
  - Good, but our parts will require a very large press & multiple high cost dies.
- Casting (Wide commercial use).
  - If vacuum properties are adequate, it may offer good dimensional control and design flexibility at reasonable cost.
- Explosive Forming (ex: HSX)
  - Very limited number of vendors; requires expertise and development.
- Brake forming (ex: W7X) (not currently favored)
  - It works, but requires great skill, especially for our highly shaped geometry. Many welds required.

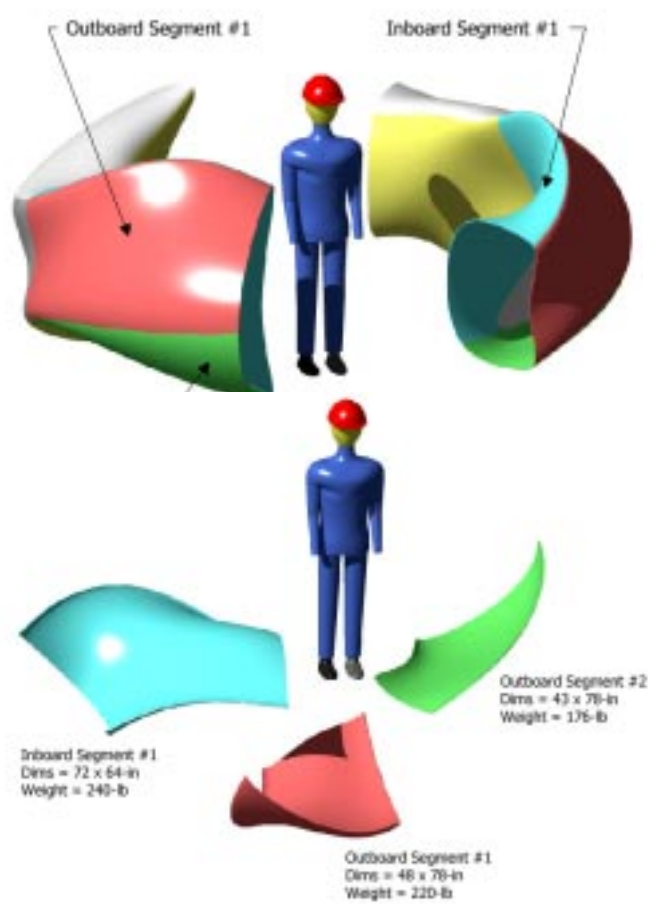

Boeing's Experience Is Encouraging!

Trial investment cast Ti-6242 tank. Pattern was made from multiple SLA pieces bonded together to reduce cost. Tank is 19.5 inches diameter X 85 inches long. The design involved features intended to stretch the foundry capabilities, including casting on a section of skin and wall thickness down to 0.080 inch. The casting came out excellent with a complete fill and only nominal areas of shrink. Vendor feels confident that slight changes in gating would eliminate these problem areas. NDE revealed no internal voids or structural deficiencies.

Helical Shell Manufacturing Options

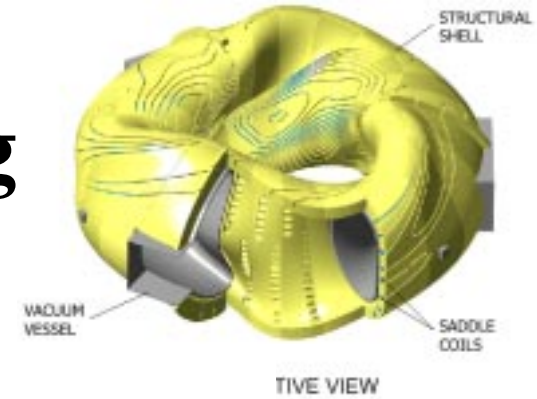

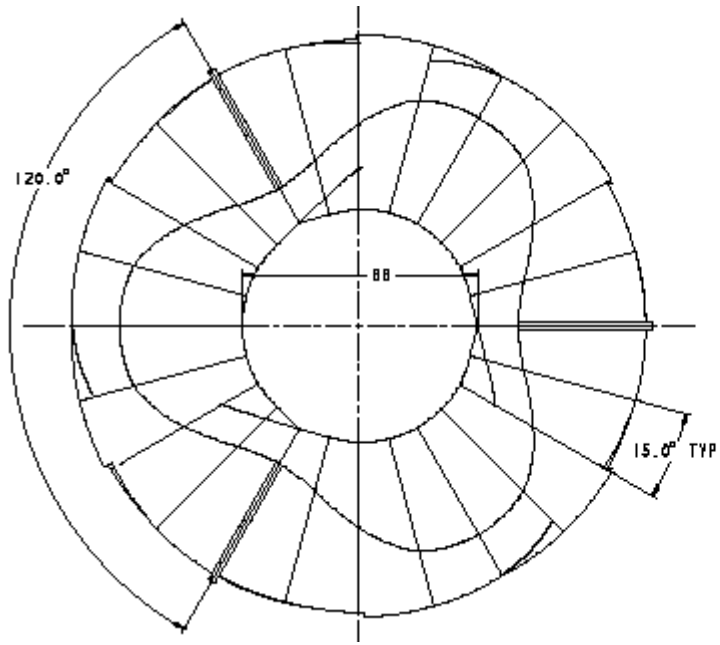

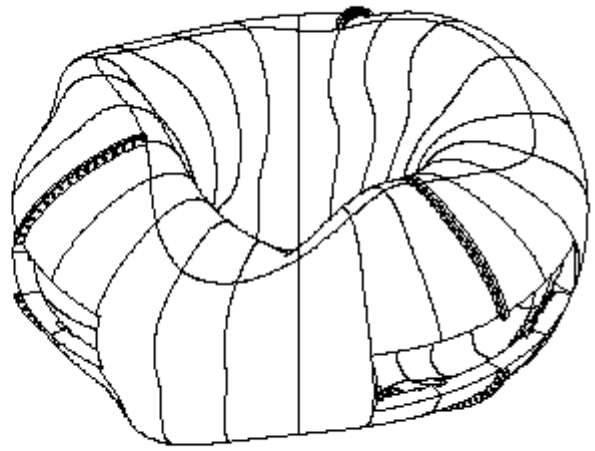

- Cast of aluminum-bronze in 48 pieces.
- Insulated breaks between all pieces.
- Joined by bolting.
- Grooves for conformal winding machined by 5 axis CNC machining after assembly.

Opportunities to Simplify the Shell

- Present design uses aluminum bronze because of its good machinability (important to machine conductor grooves) coupled with relatively high resistivity (24.6 microhm-cm for C63200 – 7% IACS). The casting is segmented into 48 pieces with electrical breaks to minimize eddy currents.
- Preliminary discussions with casting suppliers indicate they would prefer to cast in a minimum number of pieces. This would have a number of significant benefits:
  - Simplified design and fabrication;
  - Stronger structure;
  - Possibly better dimensional control;
  - Lower cost.
- Stainless steel has ~ 3 X the electrical resistivity of the aluminum bronze.
  - **Question: What is the fewest number of electrical breaks we can tolerate if we changed to stainless steel? Can we cast it in two pieces with an horizontal split line?**

The Saddle Machine Structure is Well Suited to Modular Assembly from Castings

- Castings are expected to have significant technical and cost advantages.
  - We plan to work with casting vendors to quantify.
- If stresses are low enough, we may be able to use aluminum.
  - Could anodize for eddy current breaks.

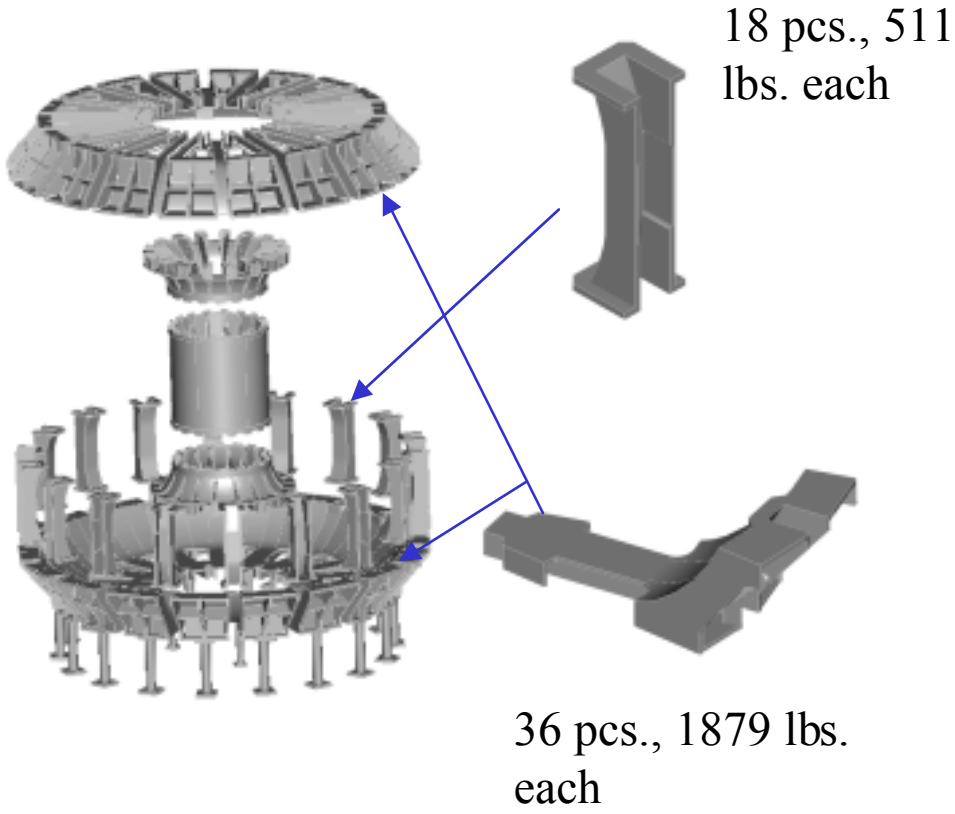

Center Shell Support Details

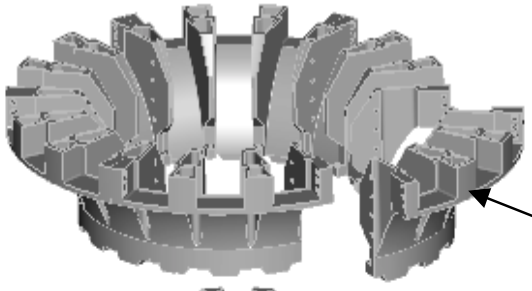

Casting segmentation will depend on (a) need for eddy current breaks; and (b) manufacturing considerations.

633 lbs (6 in upper ring, 6 in lower ring)

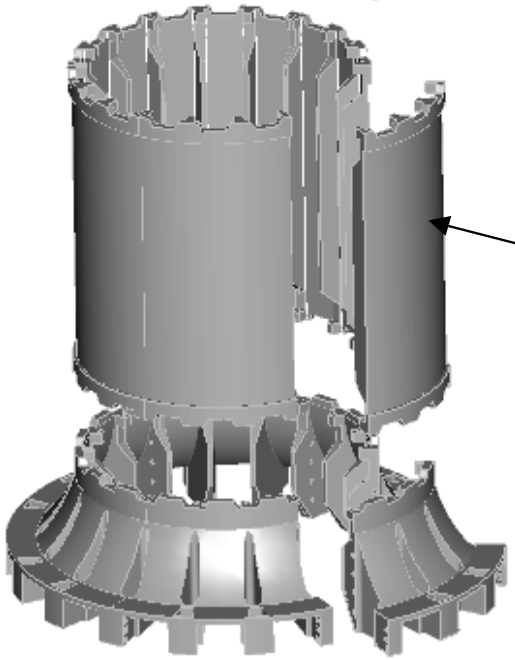

828 lbs (6)

Modular Machine Overview

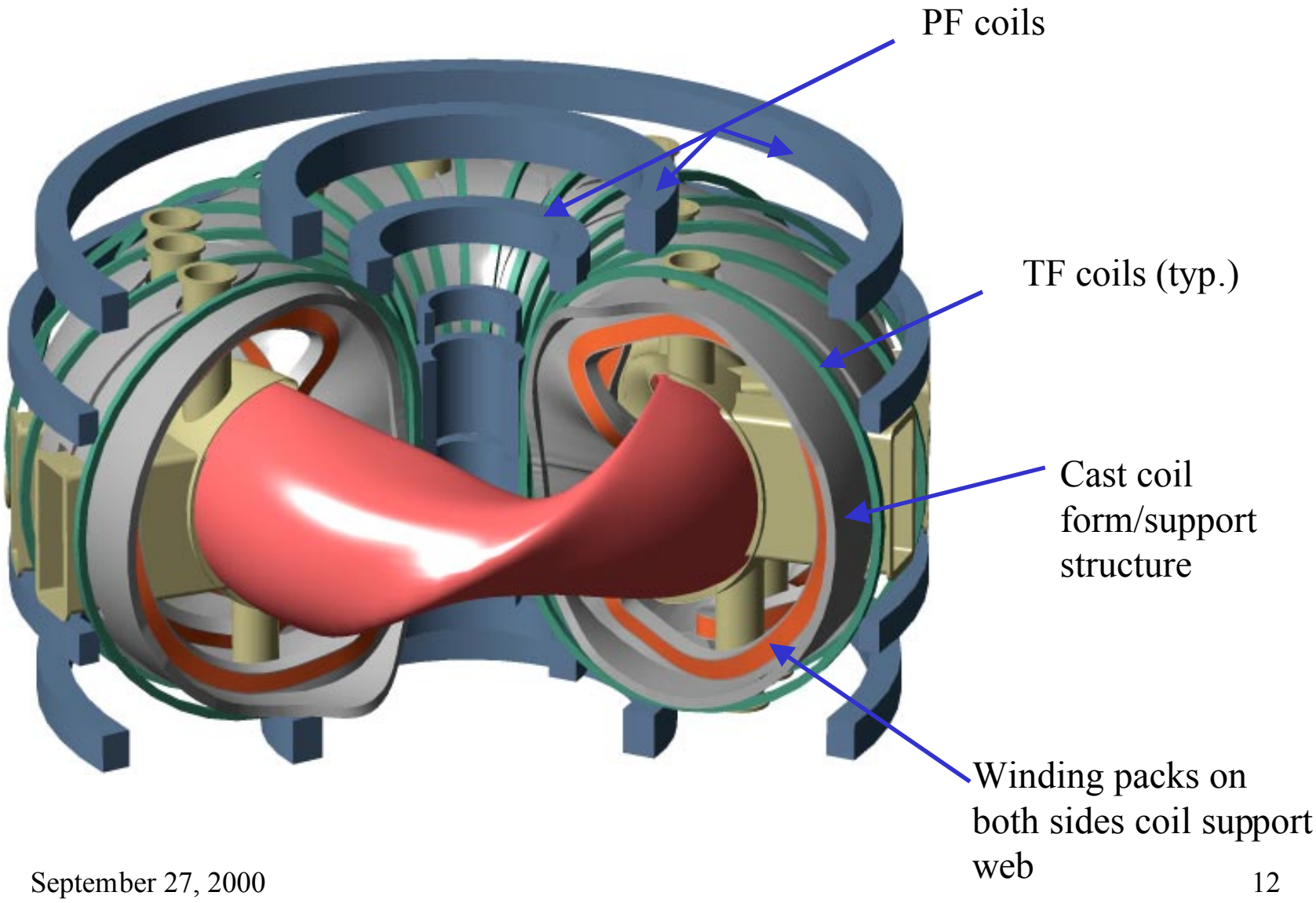

Modular Coil Cases with Integral Structure

- Coil cases will have structure integrated into their design.
- Plan to cast them of stainless steel (aluminum if stress is low enough). Cases also serve as coil winding forms.
- Each machine period has 4 types of cases. (6 of 3 types; 3 of 1 type=21 coils)
- Present effort is to smooth the "kinks" to ease coil fabrication.
  - Coils will most likely be wound into the coil case.
  - If kinks are smoothed and if the cavities are oversized, it may be possible to fabricate some coils off line and then assemble (pot) into case.
- Preliminary discussions with a casting vendor indicates that they may be able to be cast them in one piece.

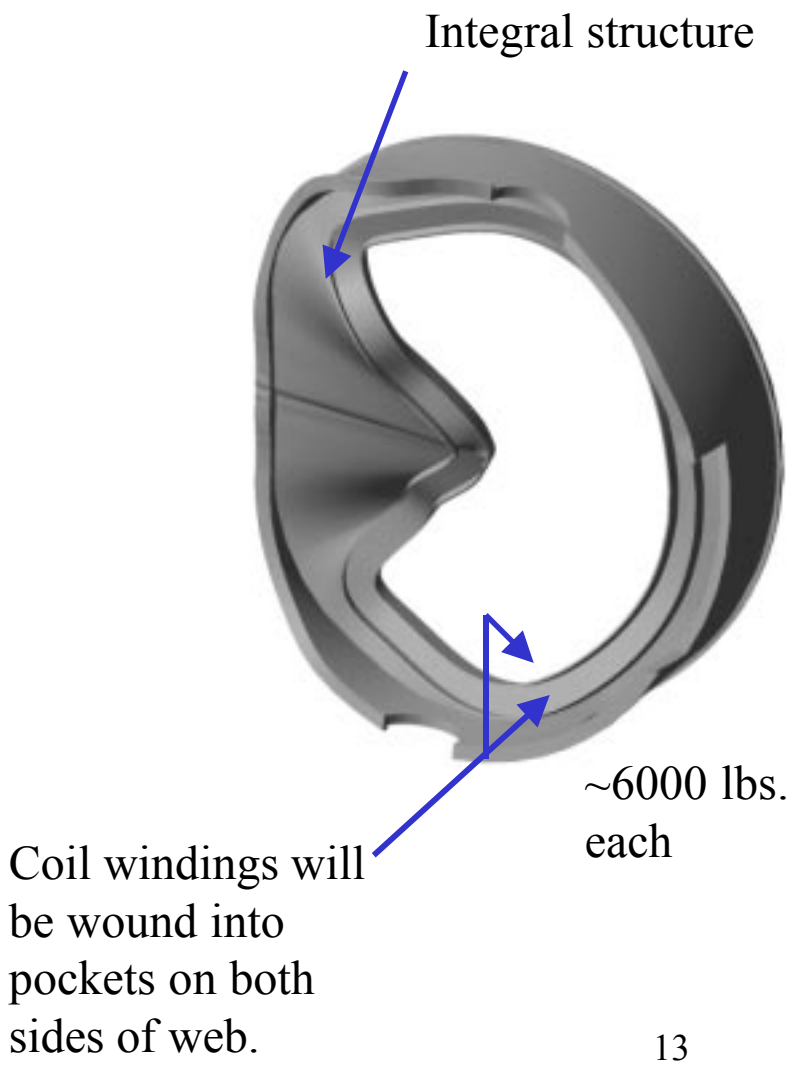

Summary

- Castings are being investigated for as many areas as possible on NCSX:
  - Very adaptable to NCSX's highly shaped geometry;
  - Can significantly reduce design time and drafting effort;
  - Will minimize welds
    - And associated distortion and permeability concerns.
  - Good reproducibility which will help in achieving good dimensional control;
  - Large cost savings.
- Preliminary input from vendors and from engineers knowledgeable in casting technology verifies that the conformal shell, modular TF coil cases, and machine structures are all good candidates for casting. Little is known of castings for use in vacuum vessel, but available data on pressure vessels and investment castings is encouraging.
- **An important issue is electrical breaks in the cast structures. This can greatly affect manufacturing and costs!**