STATUS OF STUDIES OF OPTIONS FOR SUPPLY OF POWER TO NCSX AT C-SITE

C. Neumeyer/S. Ramakrishnan

12/20/00

1.0 Requirements Update

- W Reiersen spreadsheet M1017_RefScenario_R8.xls:

  - three scenarios

    Day 1: 24 PSS
    1T: 30 PSS
    2T: 42 PSS

  - number of circuits reduced from 12 to 10

- Revised strategy

  - Day 1 will establish cost basis for PVR → use 24 PSS from D-site w/DC bus
  - 1T will be viewed as upgrade → 6 new PSS for C-site or patch w/NSTX
  - 2T will be viewed as upgrade → new C-site PSS purchases and/or patch w/NSTX

2.0 Design Basis

- 24 PSS for Day 1 from D-site

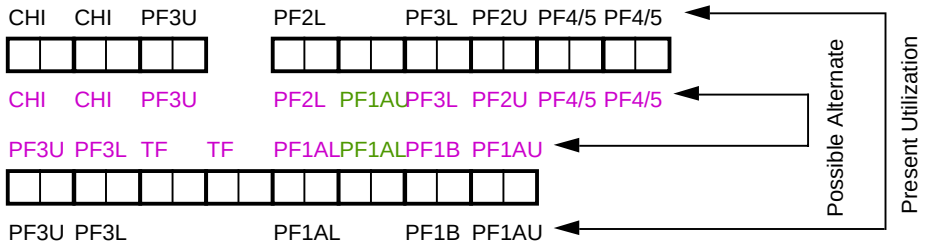

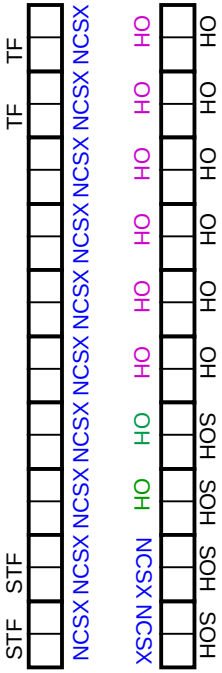

NSTX:

- now using 21 PS (42 PSS) not counting spares;
- requries 25 PS (50 PSS) for known upgrades.

NCSX:

- 12 PS(24PSS) are available.

- DC connection using overhead bus with 6 sq. in. aluminum, with 1/c-1000MCM copper cable per pole at D-site and C-site ends

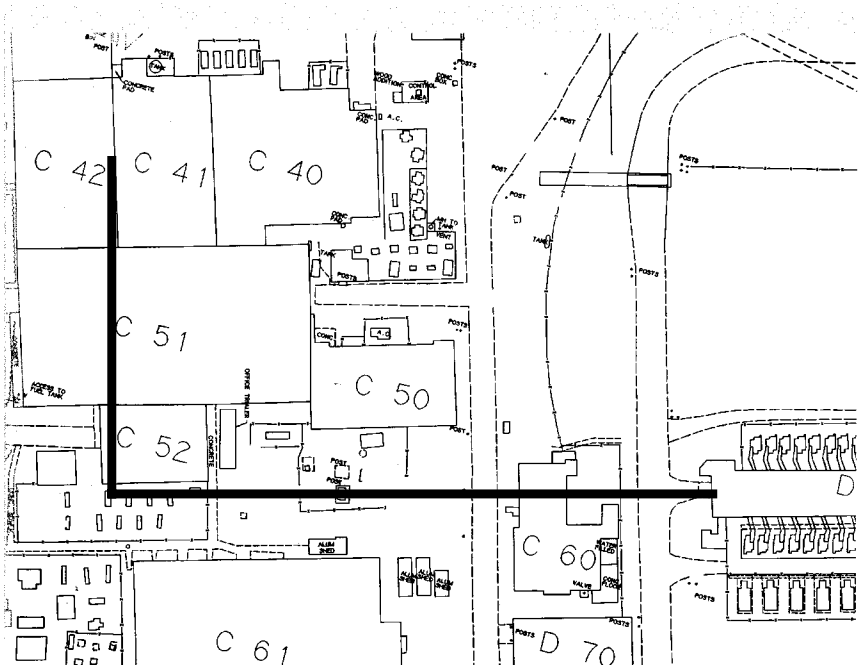

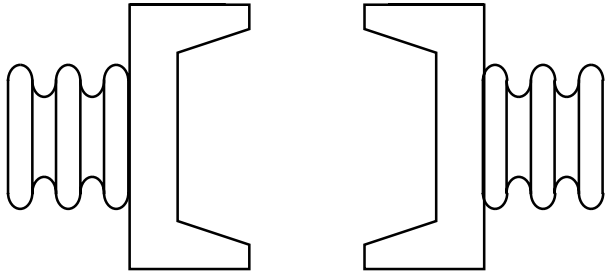

- M coil circuits to be implemented using reduced number of poles (from 8 to 5) along with associated parasitic L and R

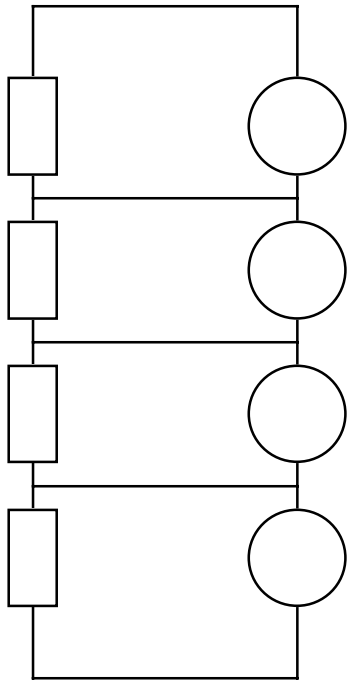

- total of 17 DC poles to be run, 9CLRs

- clear 2nd floor E-W wing of FCPC building for PSS connections and CLRs

- receive DC bus and implement current and voltage measurement in OH/EF building

- connect via cable to existing DC link/disconnect system to get to test cell

3.0 Technical Issues

- voltage response, what is required? Assume C-site MG not adequate (≈ 1 p.u. per second, +/- 1 p.u. available) but are thyristor rectifiers adequate (125 p.u. per second, +/- 1 p.u. available)?

- voltage and current ripple, is it acceptable?

Per 6-p bridge @ α=90° w/typical coil inductance 10mH (no filtering):

Vdo	1012.85	volts			
L	1.00E-02	henries			
Lfilter	0.00E+00	henries			
Ltotal	1.00E-02	henries			
	f (Hz)	Vh (volts)	Z (ohms)	Ih (amps)	Ih (peak-peak)
6	390	245.6	24.5	10.0	28.3
12	780	120.2	49.0	2.5	6.9
18	1170	79.8	73.5	1.1	3.1
24	1560	59.8	98.0	0.6	1.7
30	1950	47.8	122.5	0.4	1.1
36	2340	39.8	147.0	0.3	0.8
42	2730	34.1	171.5	0.2	0.6
48	3120	29.9	196.0	0.2	0.4

– current zero requirements, can we do the PF1 and TF bipolar circuits using reversing switch scheme and save on PSS?

4.0 Costing

- first overall cost presentation tomorrow

- original costs were estimated by R. Hatcher @ $3.2M

    - saddle machine
    - PBX power systems would be used
        - ✓ including C-site MG
        - ✓ including SF/EF
        - ✓ including Robicon ESAT
        - ✓ excluding the OH
    - OH to be replaced by relocating 4 D-site PSS
    - New PS for saddle coils

- NSTX PS Utilization (23/37 PS, 46/74 PSS, 20/26 CLR)

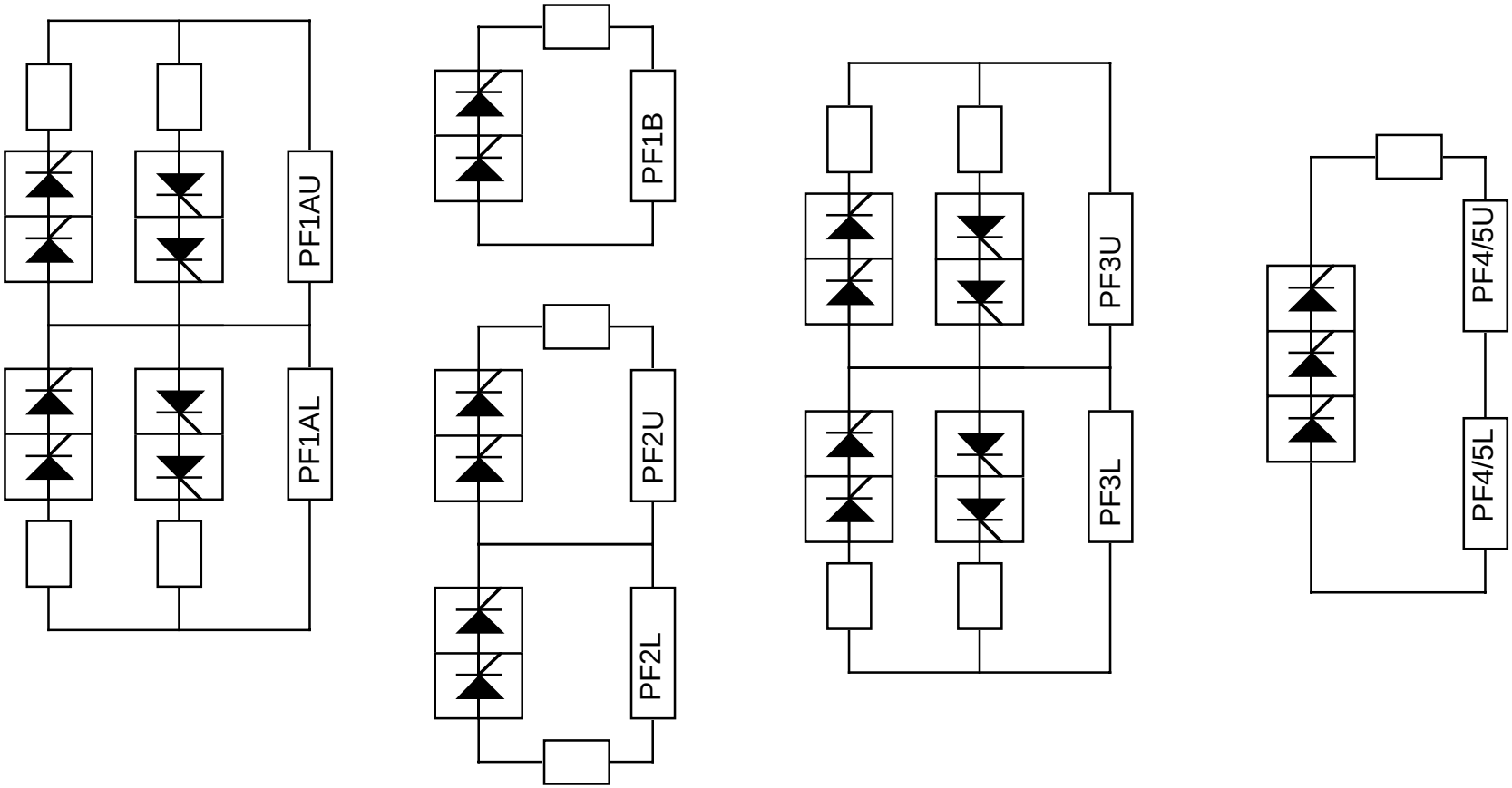

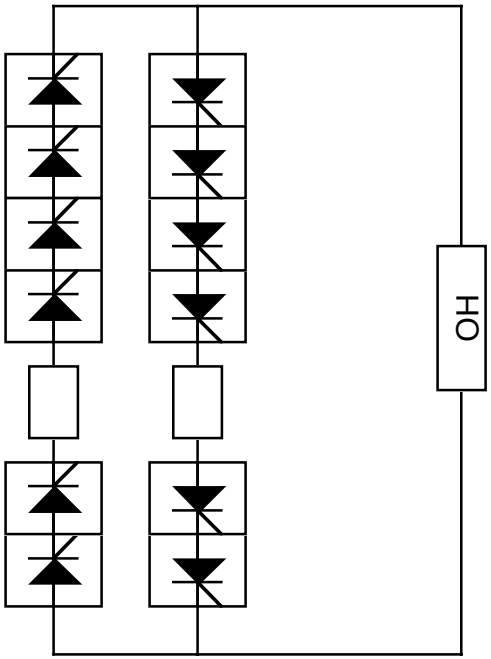

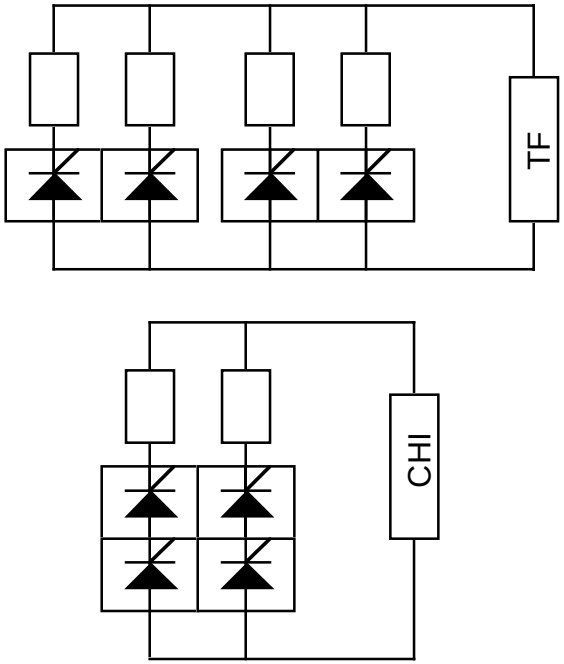

“Extra” sections in PF1A, PF1B, PF2?, PF3? Are not extractable because:

- they share controls with twin section
- they are woven into the cabling
- they are not easily segregated

Their modular parts (thyristor modules, MGDs) could be moved but their transformers are shared with their twin sections.