Stellarator Core Machine Configuration

NCSX Project Meeting

Dec 19-20, 2000

B. Nelson, M. Cole, P. Fogarty

P. Goranson, G. Jones, D. Williamson

Presentation Outline

- What is the configuration status of each subsystem?
  - Baseline models stored in Pro/INTRALINK
  - Minor revisions to resolve interference, fabrication issues, etc
- What is the assembly plan for the core?
- What tasks are yet to be completed?

Machine Configuration

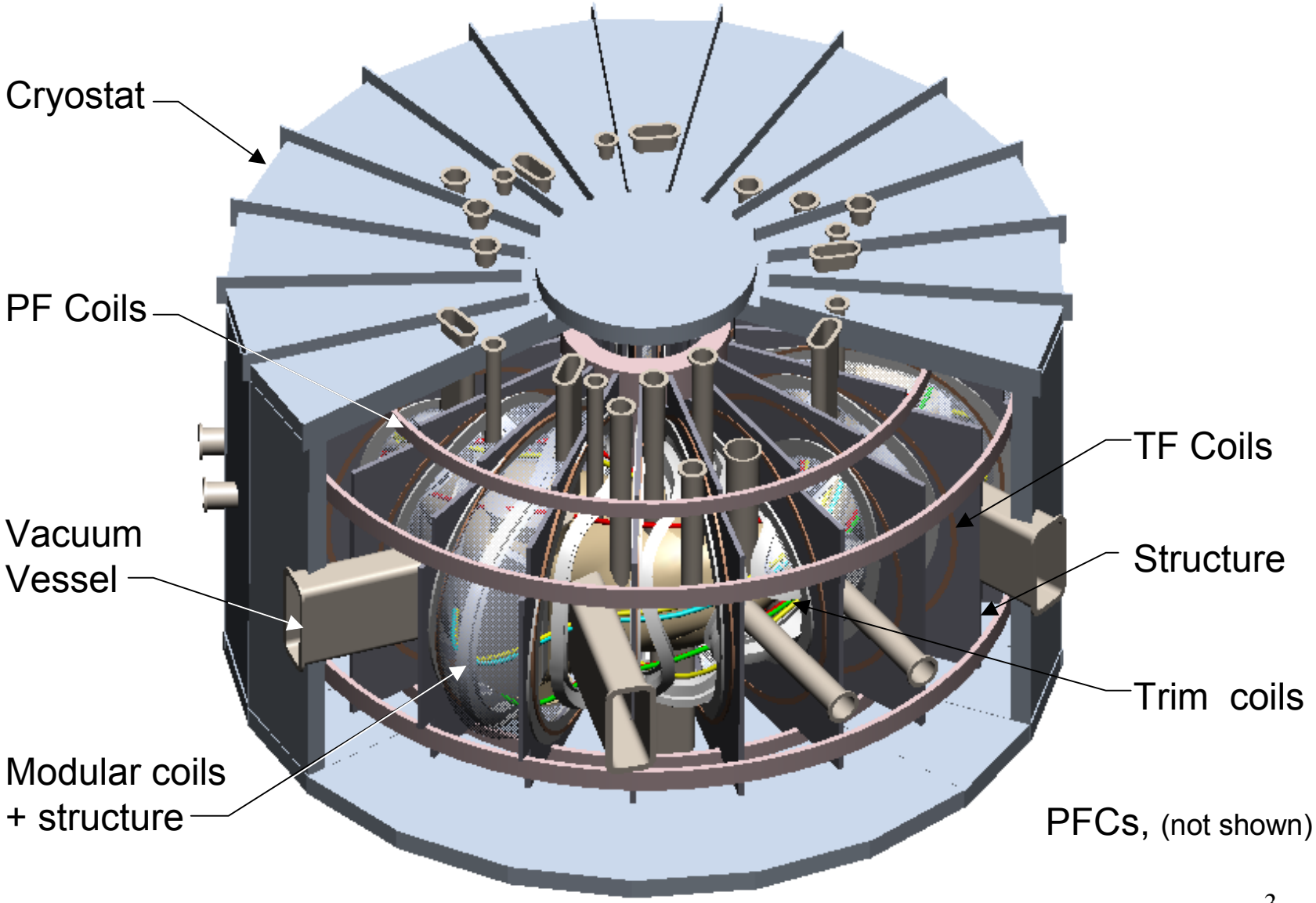

Plan Section View

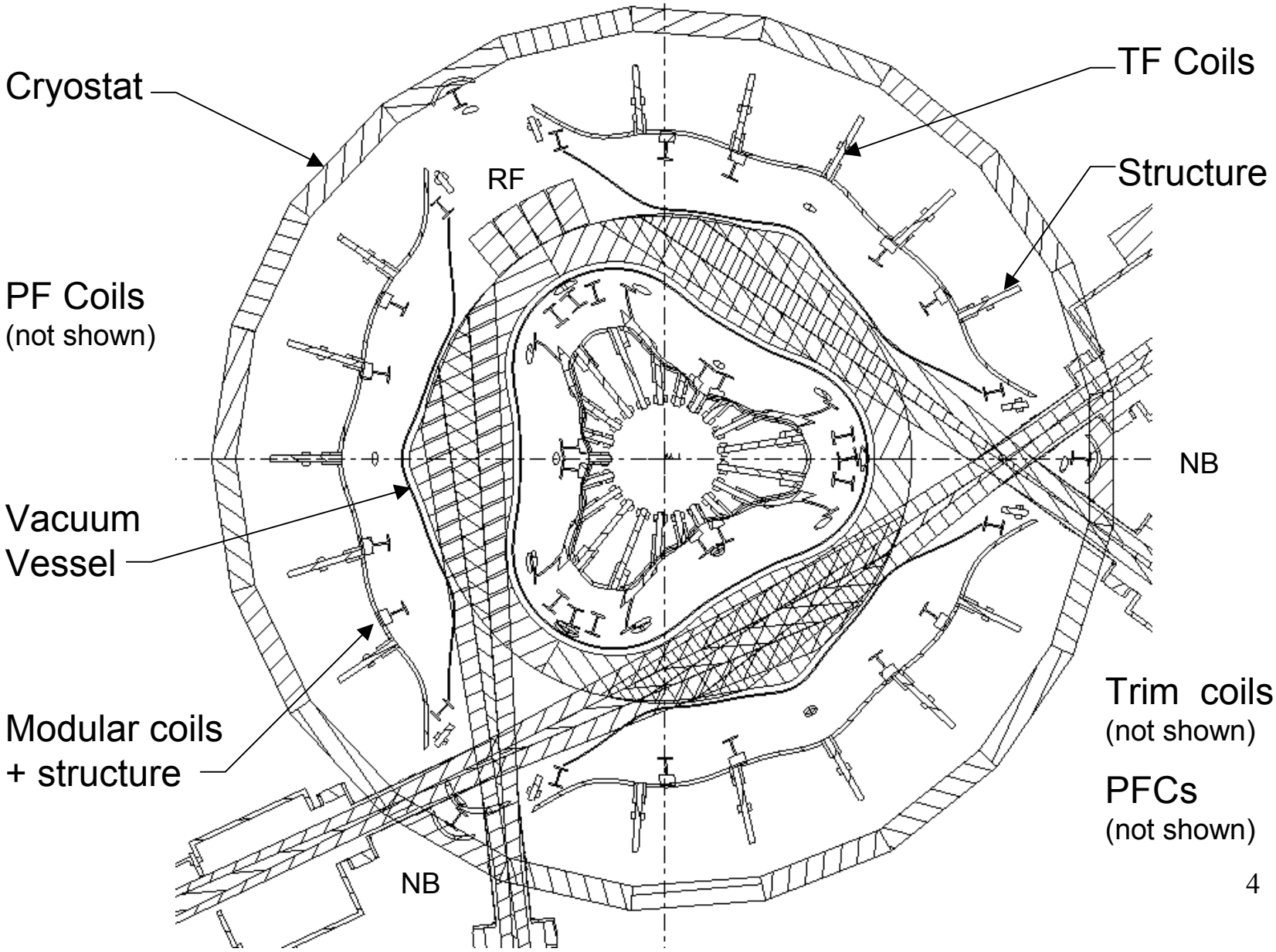

Plasma Facing Components

Requirements:

- NB armor, limiters needed at start
- Maintain gap with plasma of 2-cm inboard, 10-cm outboard
- Space for sensors, mag loops, etc
- Carbon based, bakeable to 350-C
- Accommodate 6-MW for 0.5-s
- Compatible with boronization, GDC
- Upgrade to full coverage, 12-MW for 1.7-s, divertor structure

Design Concept:

- Large, formed C/C panels attached to vessel wall
- Inertial cooling during shot, conduction to VV between shots
- Additional structure (limiters, divertor baffles are still being defined)

PFC Configuration

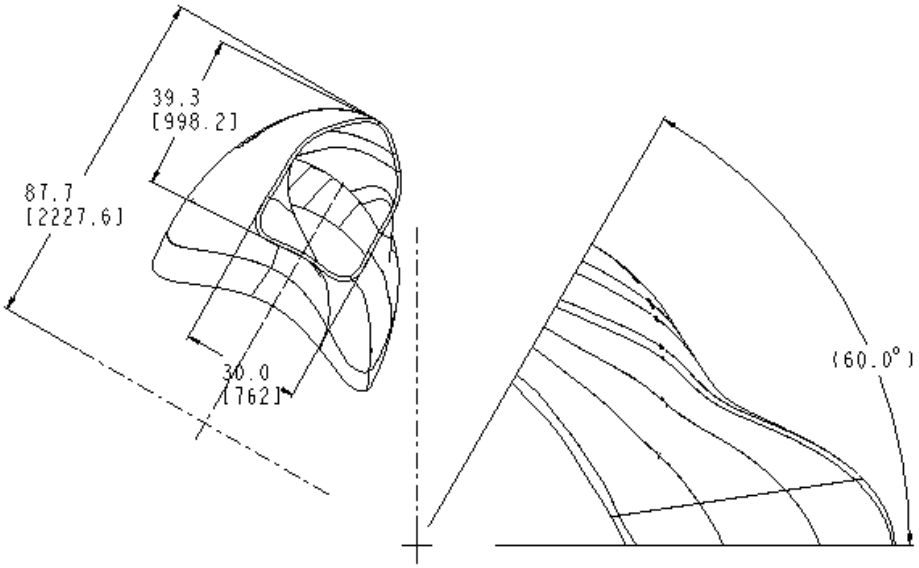

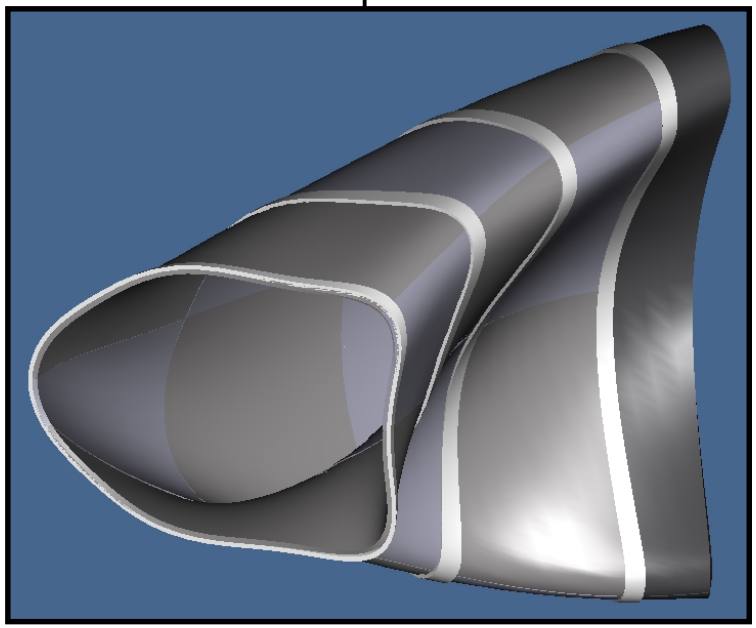

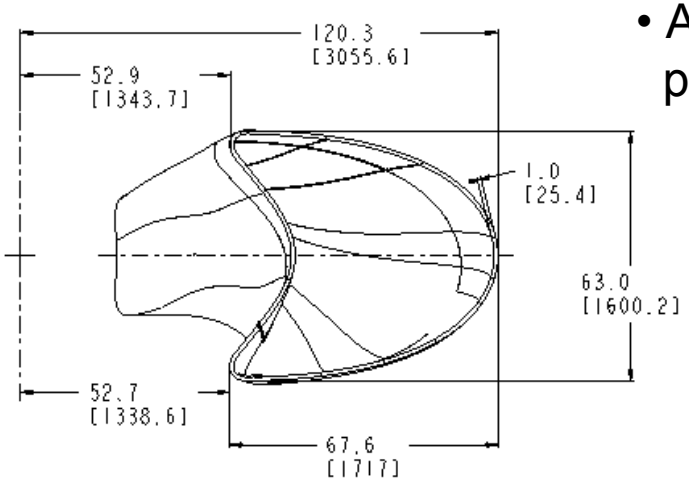

- Approx 20 panel sections per half-period

Vacuum Vessel

Requirements:

- Bakeable to 350-C
- Low magnetic permeability
- Internal components mounted to vessel wall
- Vessel supported by hanging from modular coil structure
- Provide access for heating systems, vacuum pumping, diagnostics, personnel

Design Concept:

- Thin conformal structure
- Three large symmetric ports for heating systems
- Many smaller, symmetrically arranged ports for diagnostics
- External trace cooling/heating and layered insulation

Vessel Configuration

- Shell material Inconel 625
- Thickness .375 inch
- Wt of shell 9700 lbs
- Total wt w/ports ~ 15000lbs
- Internal shell area ~ 50 m^2
- Internal shell volume ~ 13 m^3
- All metal seals
- Insulation consists of microtherm and solomide foam layers

- Est. heat load on cold structures:
  - Bakeout 30 kW
  - Operation 20 kW

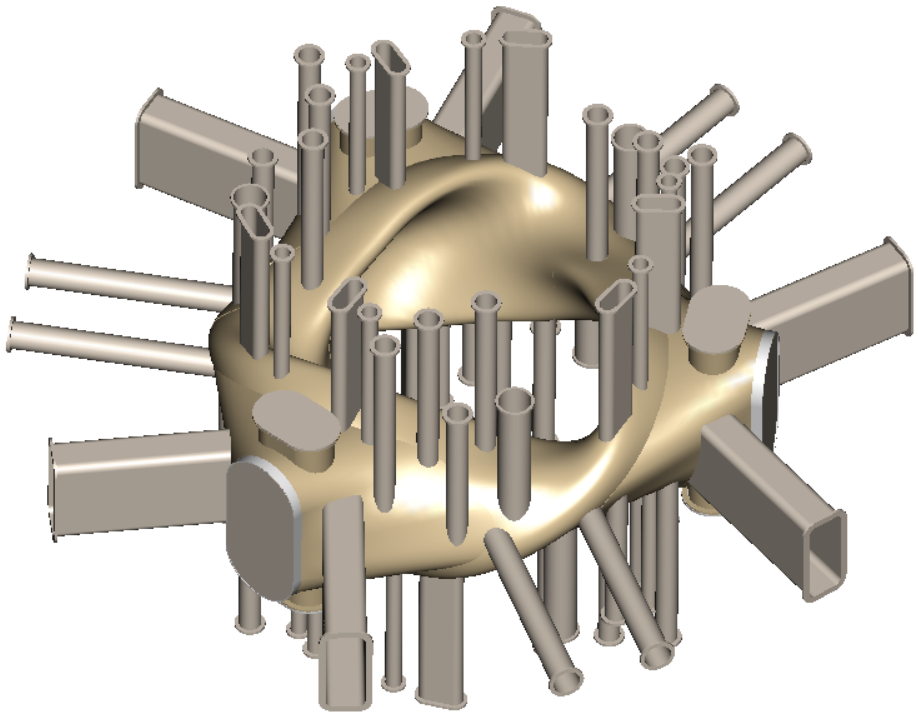

Vessel Shell Modification

- Shape is being modified to eliminate sharp transition between plasma conformal section and NB port

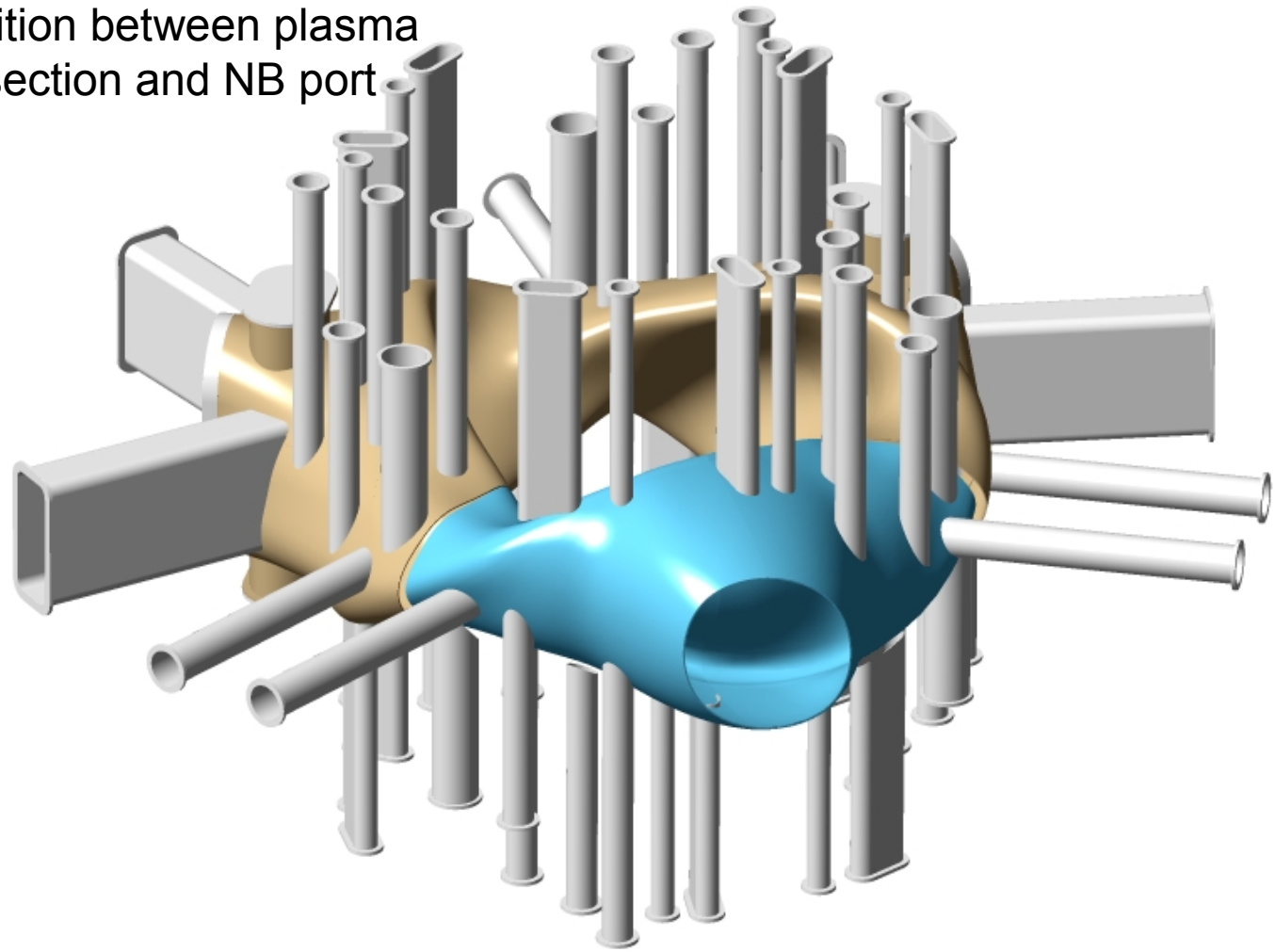

Vessel Port Modification

- Port geometry still being defined
- Location of flange interface on port extension depends on use

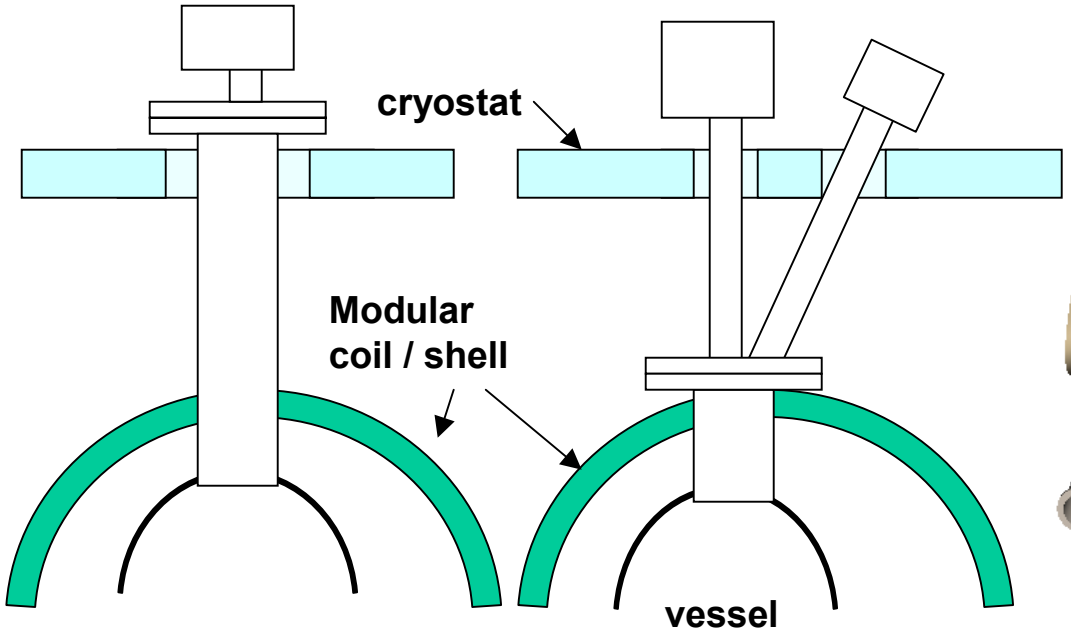

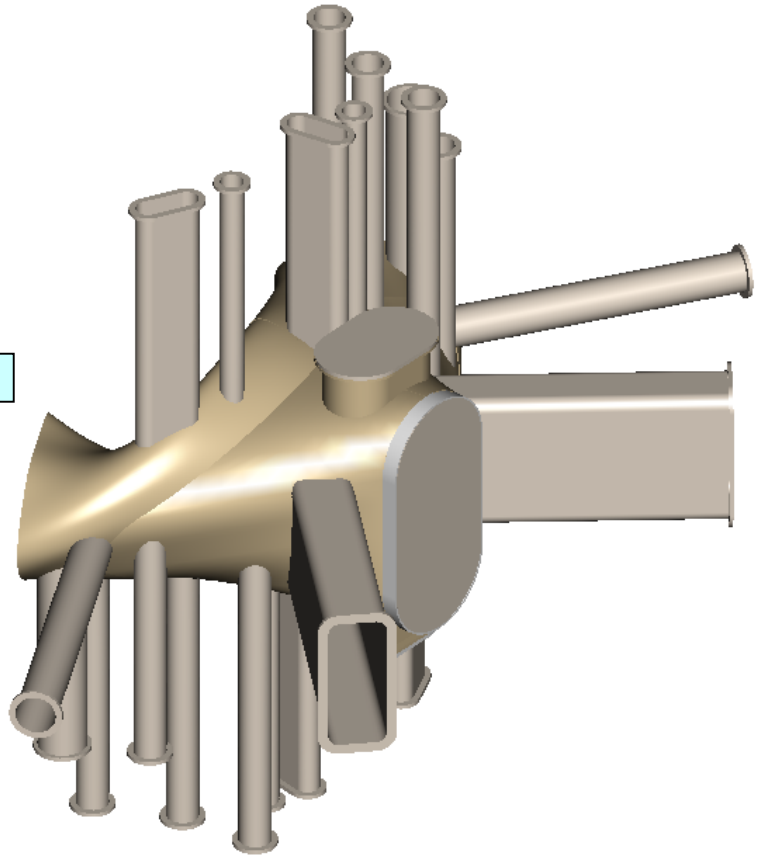

Toroidal Field Coils

Requirements:

- Provide background toroidal field of +/- 0.25-T
- Vertical position not aligned with magnetic axis

Design Concept:

- 21 coils, split and mounted on radial support plates
- 6 turns per coil, 3 on each side of plate
- Hollow copper conductor
- Operate at cryogenic temp

TF Coil Configuration

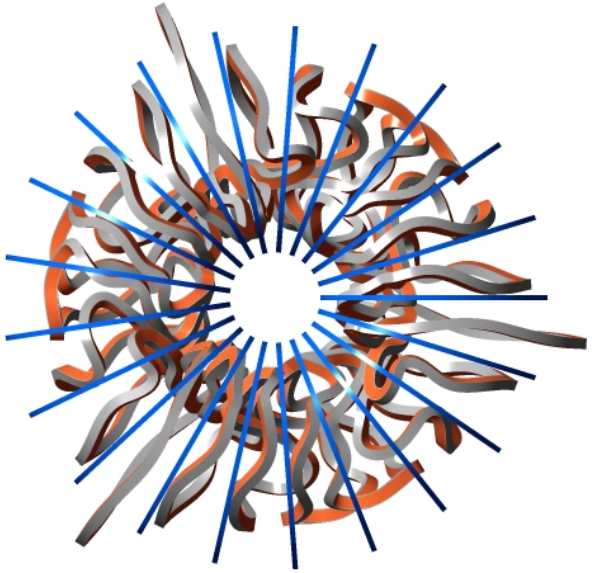

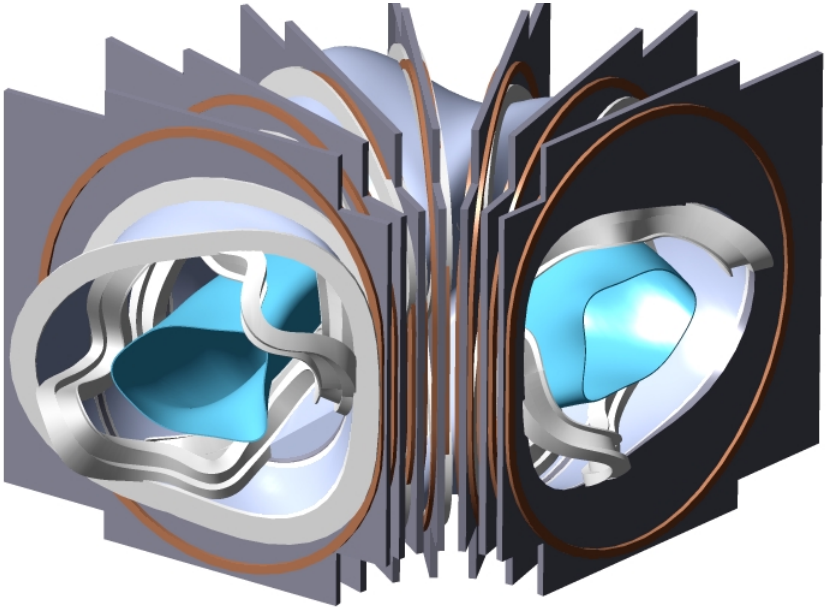

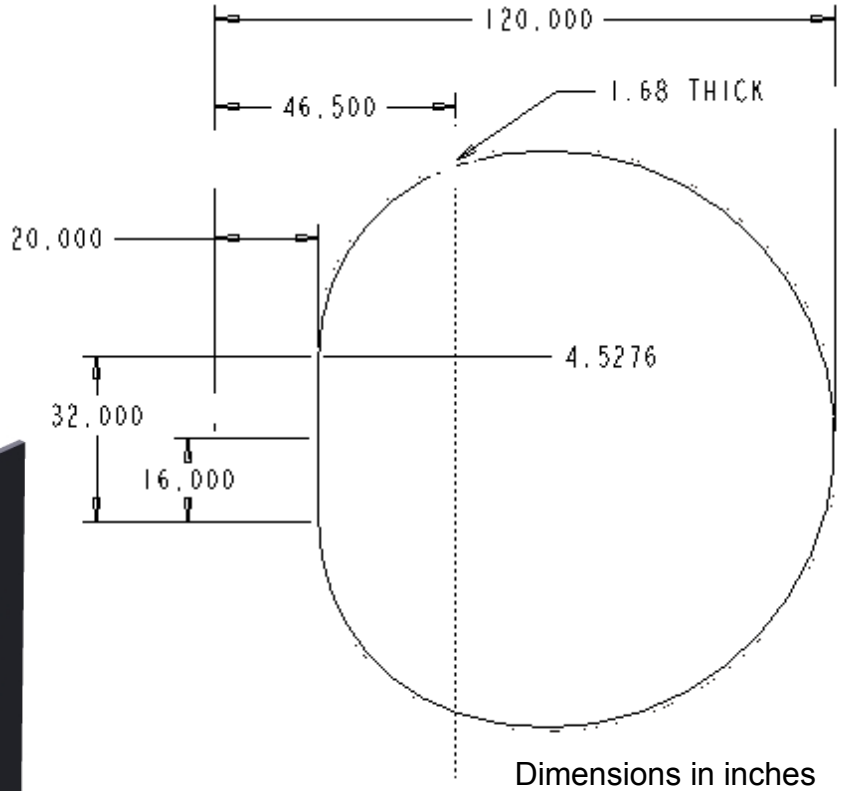

Dimensions in inches

Poloidal Field Coils

Requirements:

- 5 coil pairs required for OH, equilibrium, and field shaping
- OH supplies 1 V-s min, goal of 3 V-s
- Minimize field errors

Design Concept:

- Locate close to plasma but outside modular, TF coils
- Hollow copper conductor, vacuum potted with epoxy
- Operate at cryogenic temp
- Free-standing between radial plate supports
- Separate leads for each coil

PF Coil Configuration

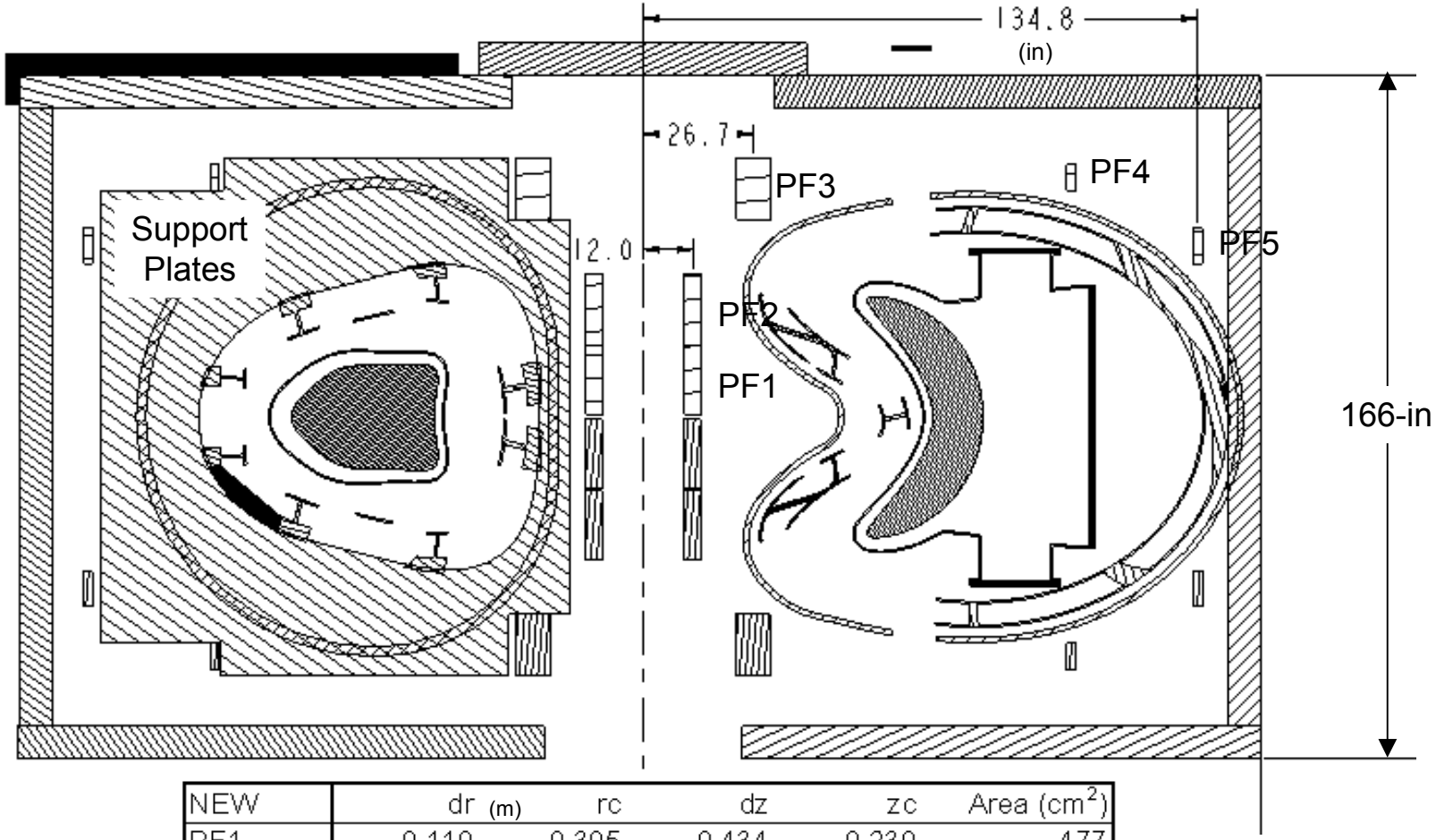

NEW	dr (m)	rc	dz	zc	Area (cm^2)
PF1	0.110	0.305	0.434	0.230	477
PF2	0.110	0.305	0.434	0.662	477
PF3					
PF4	0.218	0.678	0.380	1.409	828
PF5					
PF6	0.056	2.644	0.164	1.479	92
PF7	0.056	3.348	0.218	1.058	122

TFTR PF Coil Comparison

- Re-use of TFTR coils does not appear feasible

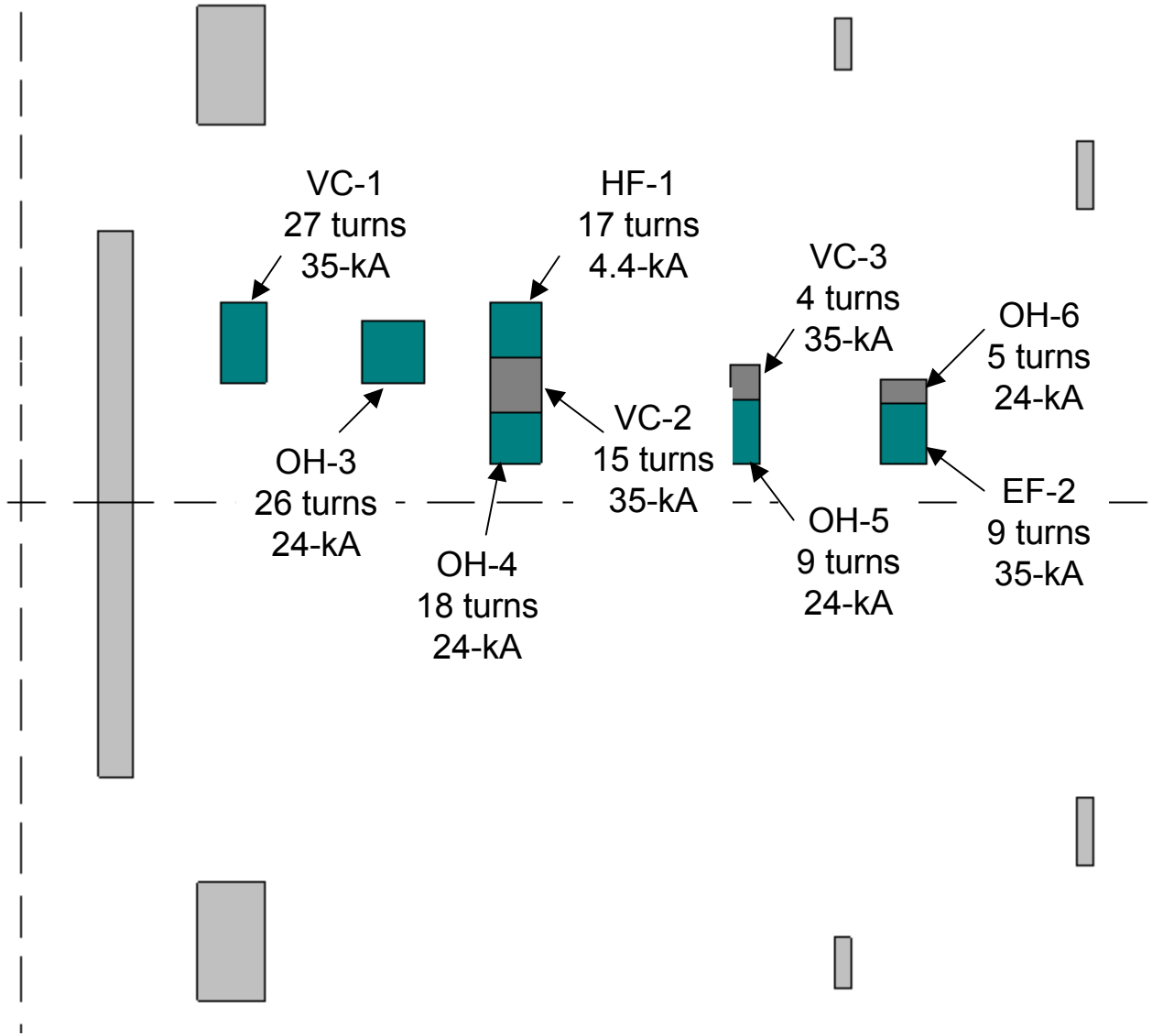

Cryostat

Requirements:

- Provide thermal insulation for cryo-cooled coils
- Slight positive pressure to prevent air ingress, condensation
- Access for maintenance, diagnostics, etc

Design Concept:

- Frame and panel construction similar to FIRE design
- Gortiflex boots to seal between vessel port extensions and cryostat
- Forced air or heaters on exterior
- Area = 200 m^2
- Volume = 190 m^3
- Thickness = 8-in

Cryostat Configuration

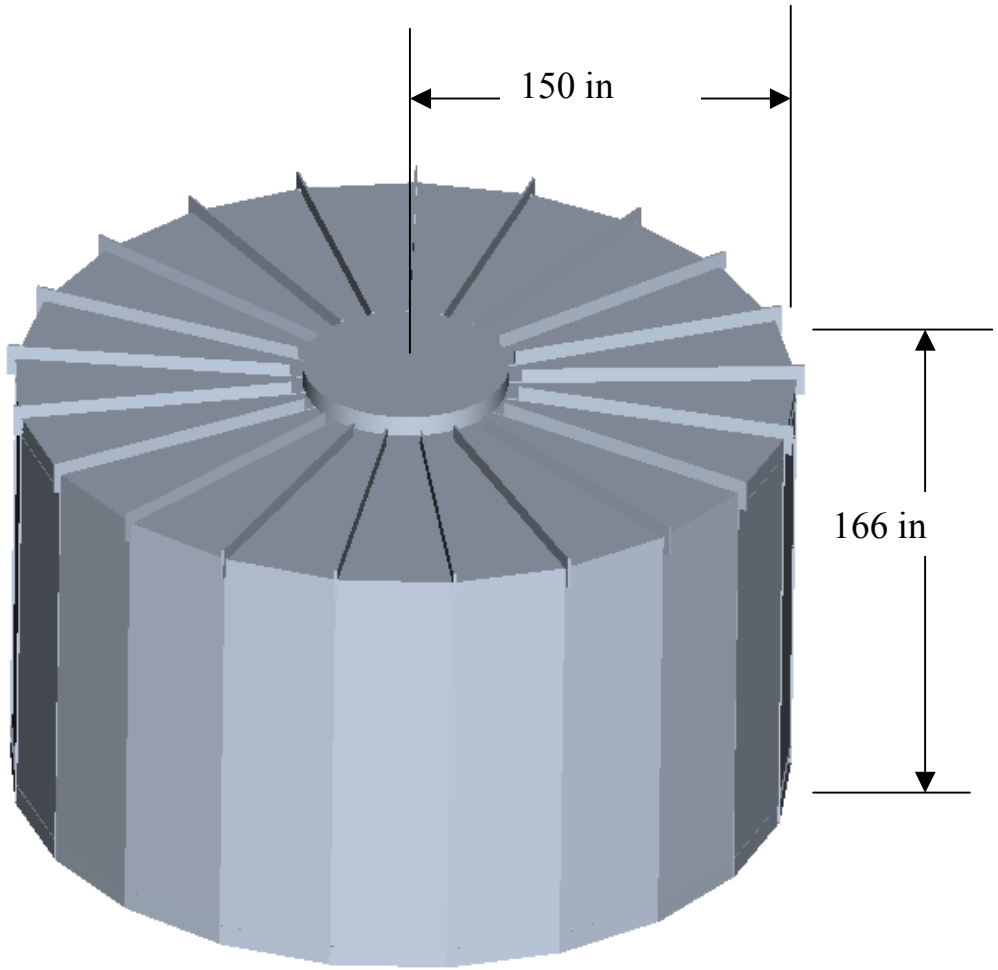

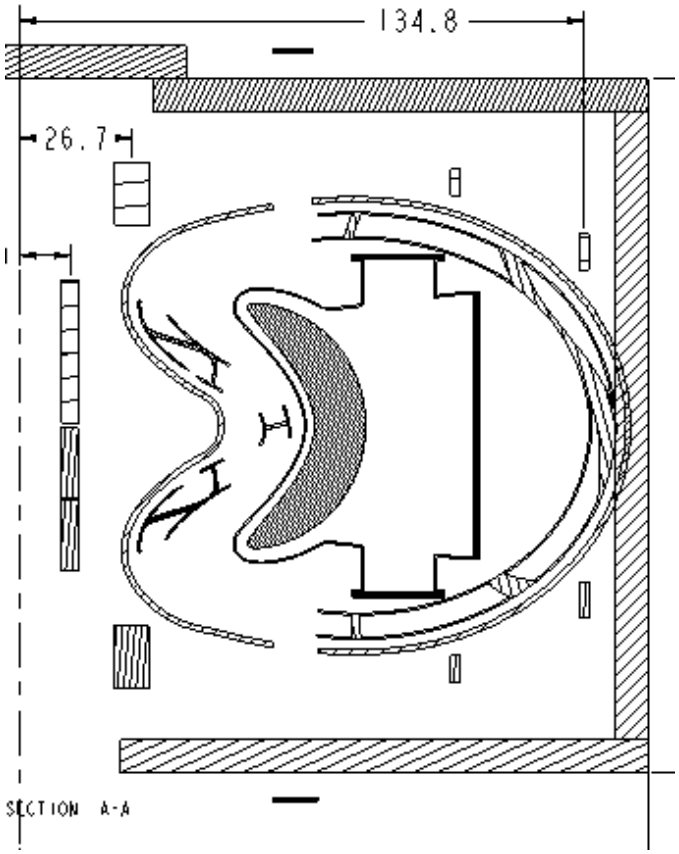

Machine Structure

Requirements:

- Support stellarator core from foundation
- Provide thermal isolation, seismic restraint, leveling features
- Provide sufficient clearance for personnel access to bottom of cryostat/core

Design Concept:

- Models not developed

Modular Coils

Requirements:

- 2-T for reference pulse (~1-s ESW)
- 1-T for 1.5-s flattop (~2-s ESW)
- Current per turn < 24-kA
- +/-1-mm winding accuracy
- Access for Neutral Beams
- Pulse rep rate of 10-min

Design Concept:

- Case # LI383-1017
- 7 coils per period, symmetry on V=0 plane (bean shape)
- Symmetry coils moved out ~1-m to provide NB access
- Coils wound with flexible, cable conductor into cast and machined winding forms

Modular Coil Configuration

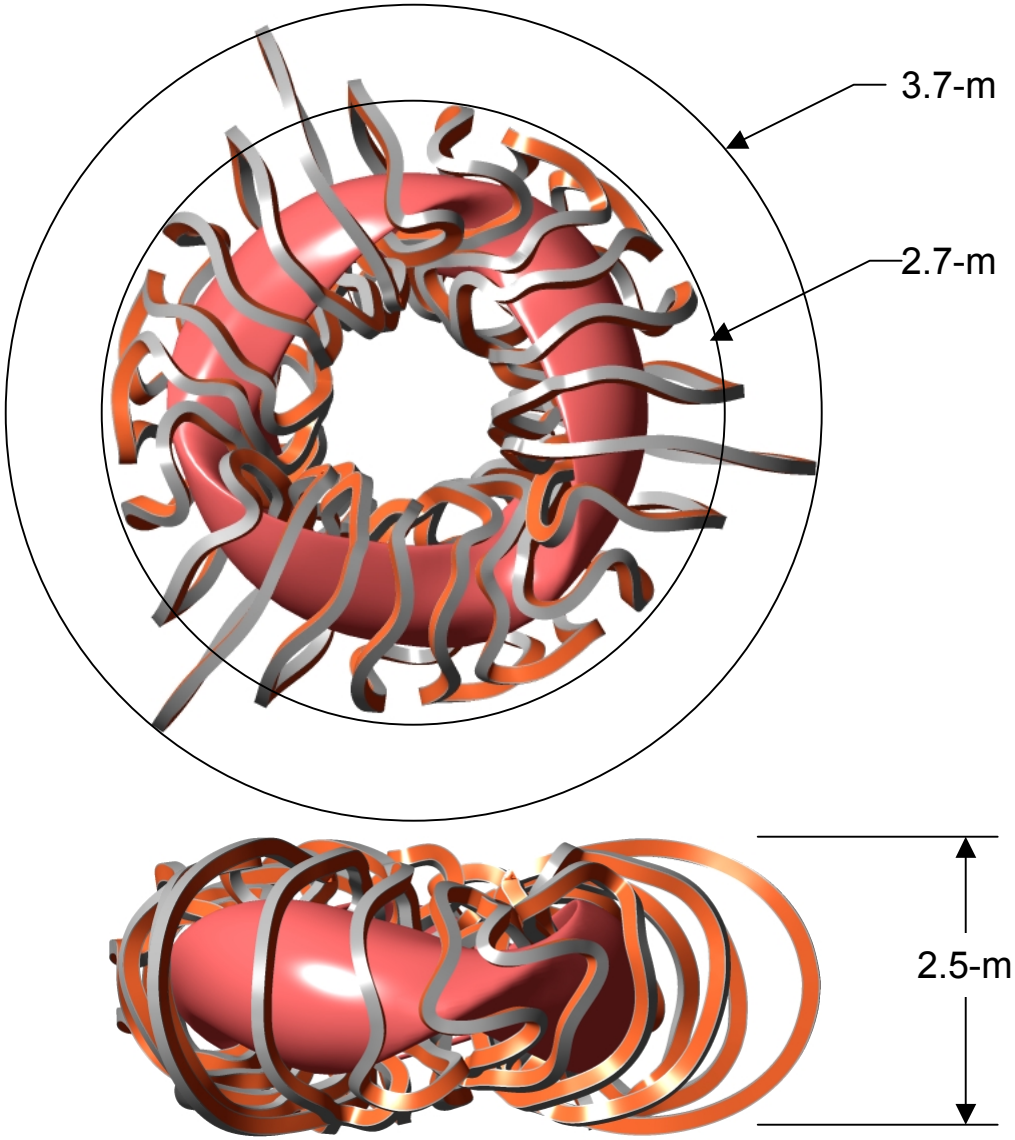

Coil Winding Form and Structure

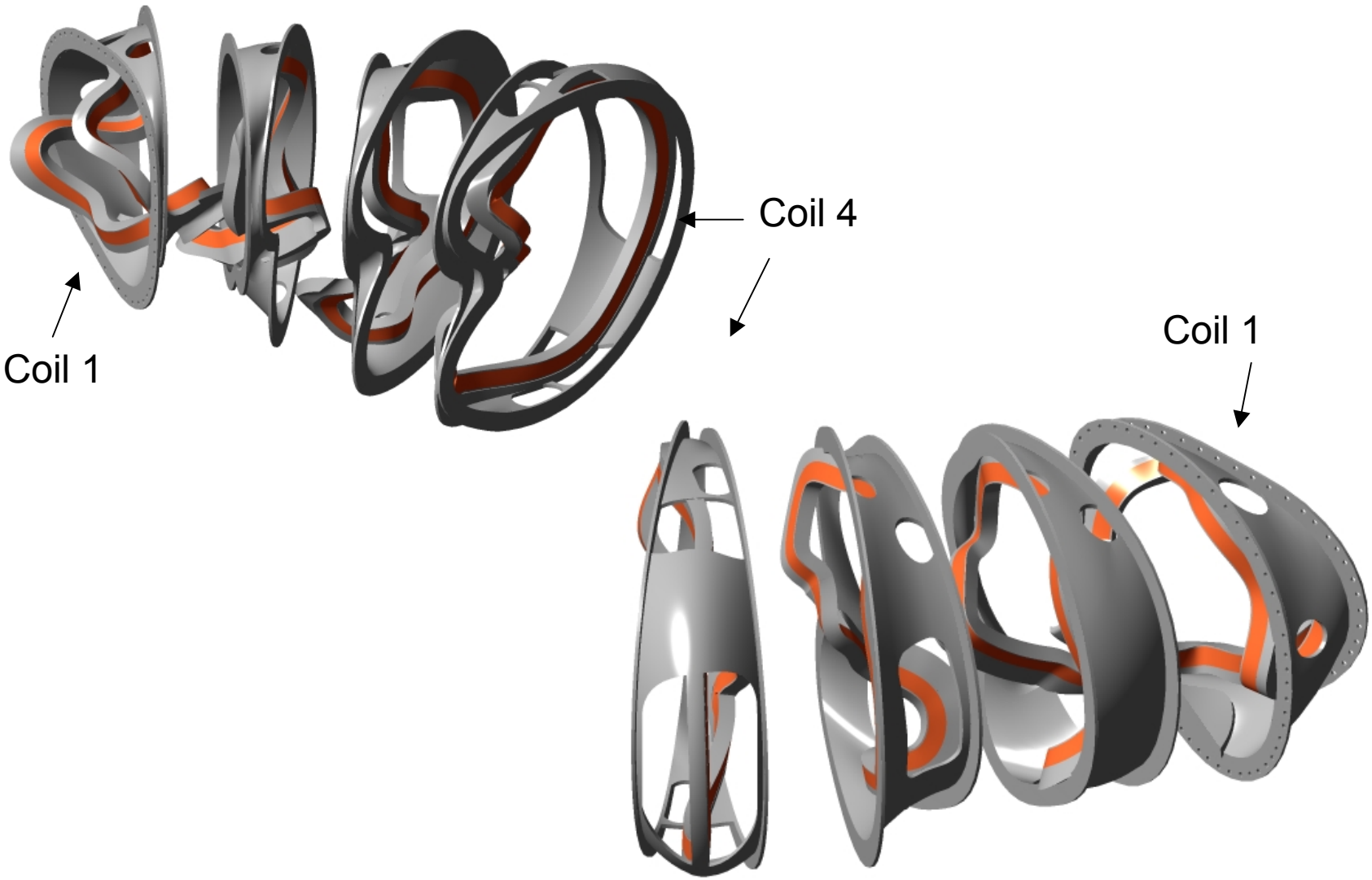

Modular Coil Winding Pack

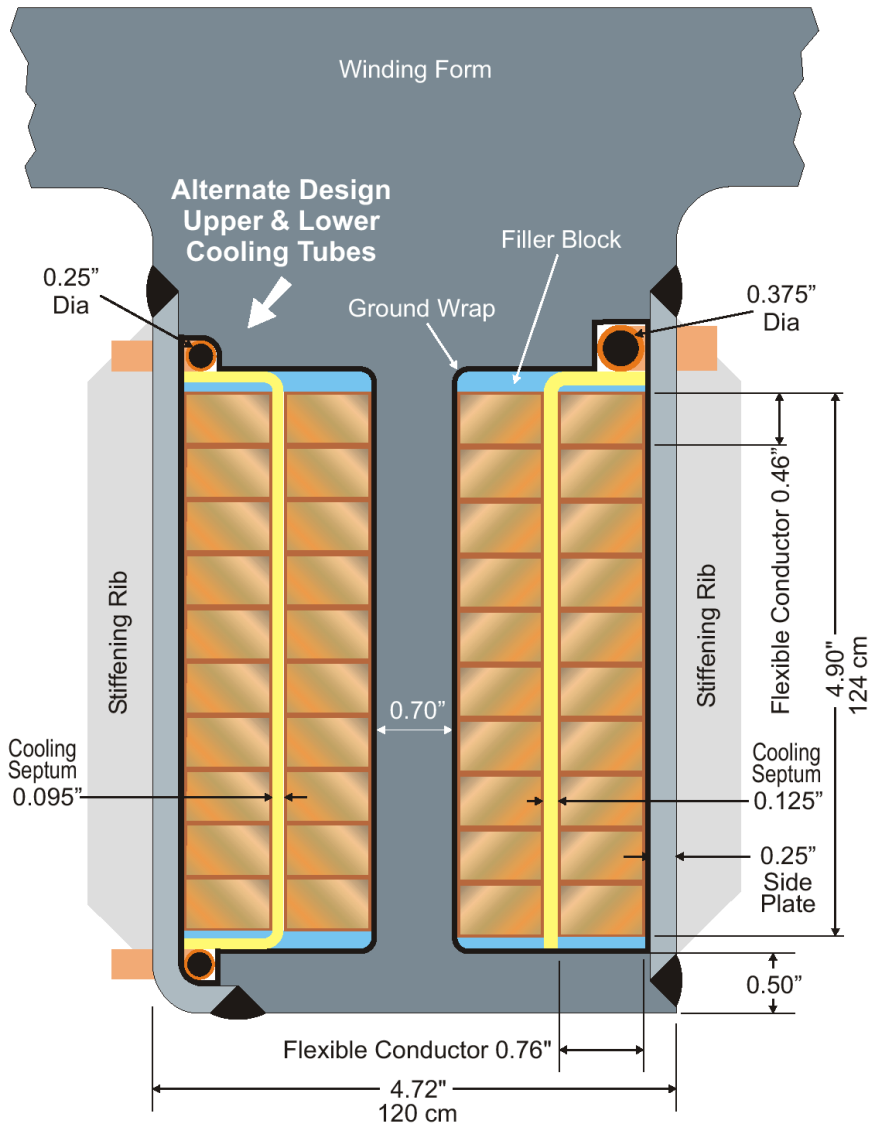

Parameters:

- **Coil Envelope = 12 x 16-cm**
- **Current / Coil = 864-kA @ 2-T**
- **Number of Turns = 40**
- **Nominal current / turn = 21.6.-kA**
- **Conductor weight = 20,600 lbs**
- **Structure weight = 110,000 lbs**
- **Total peak power = 70 MW**

Cooling by Conduction to Septum:

- **Conductor Size = 19 x 12 mm**
- **Septum Width = 3-mm**
- **Cable Packing Factor = 75%**
- **Net Current Density = 13-kA/cm2**

Modular Coil Winding Process

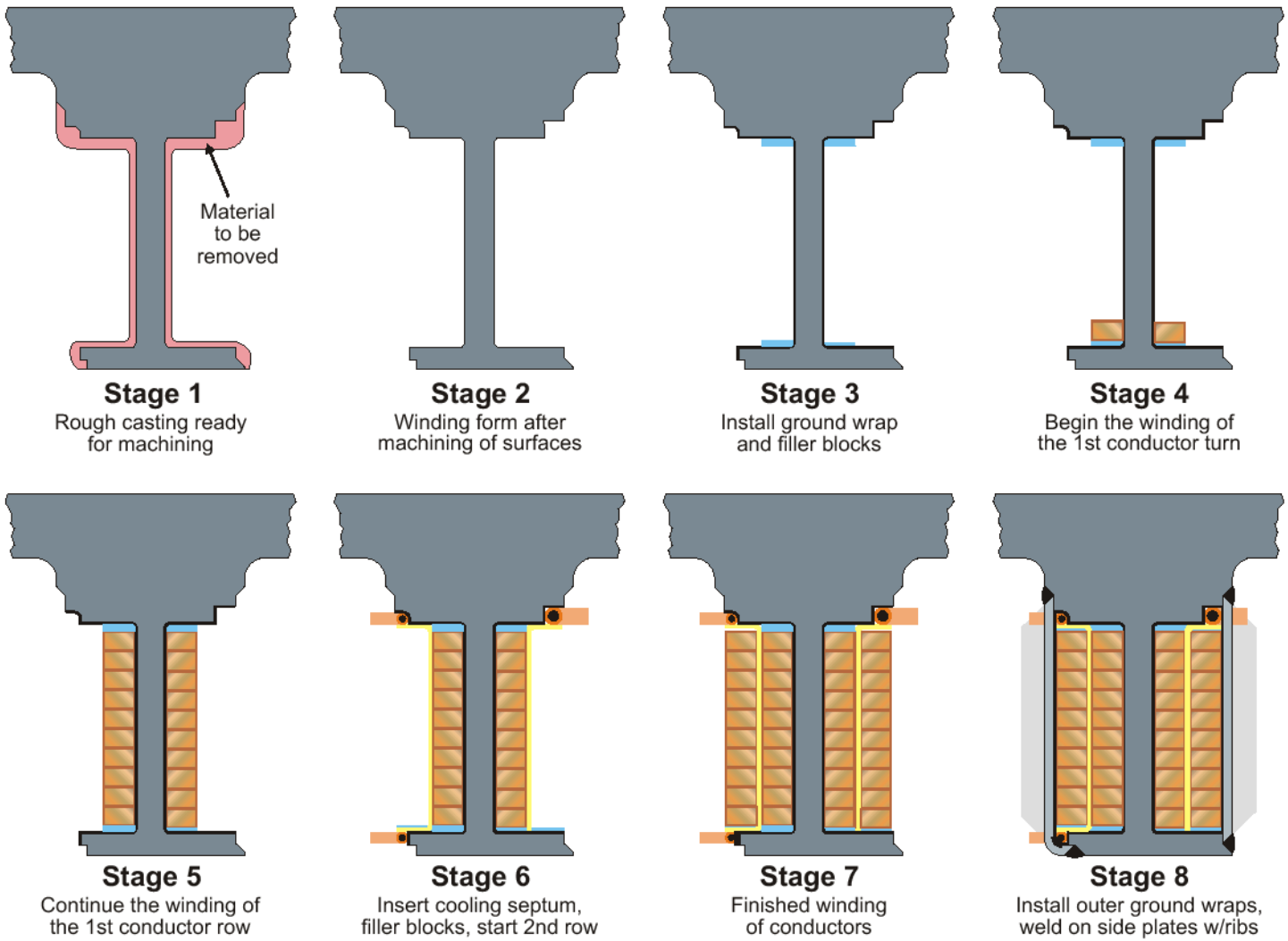

Half Field Period Subassembly

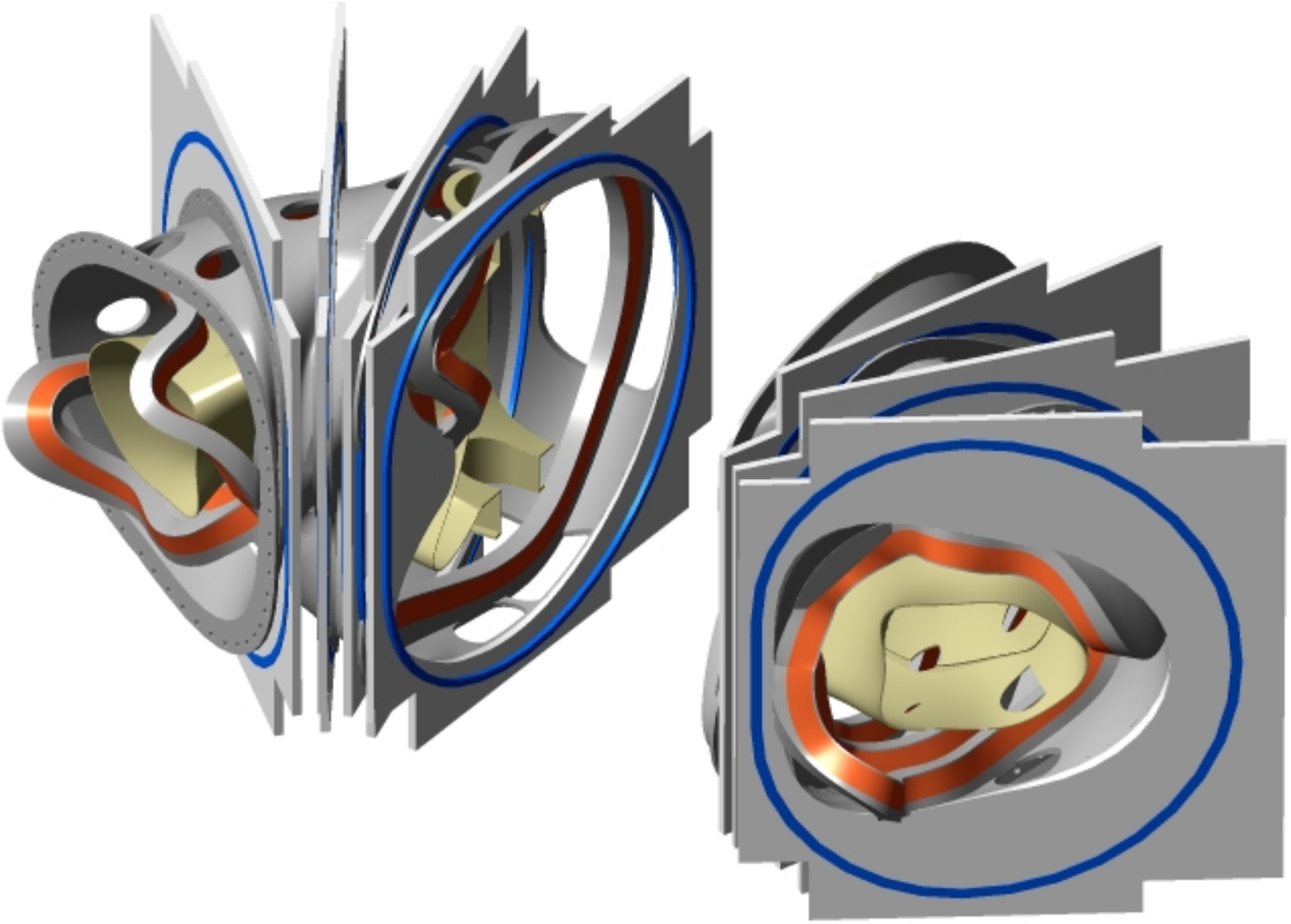

Field Period Subassembly

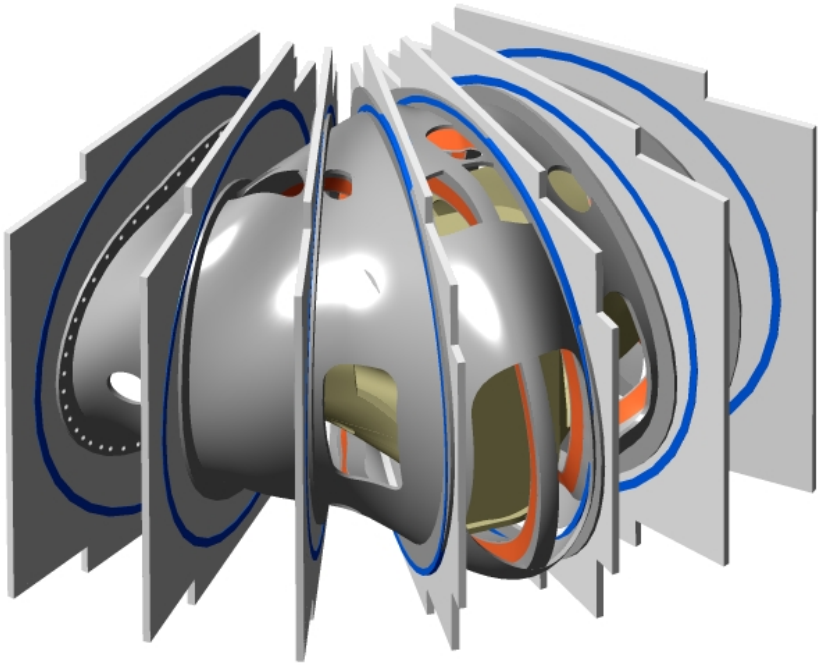

Before Attaching Vessel Port Extensions

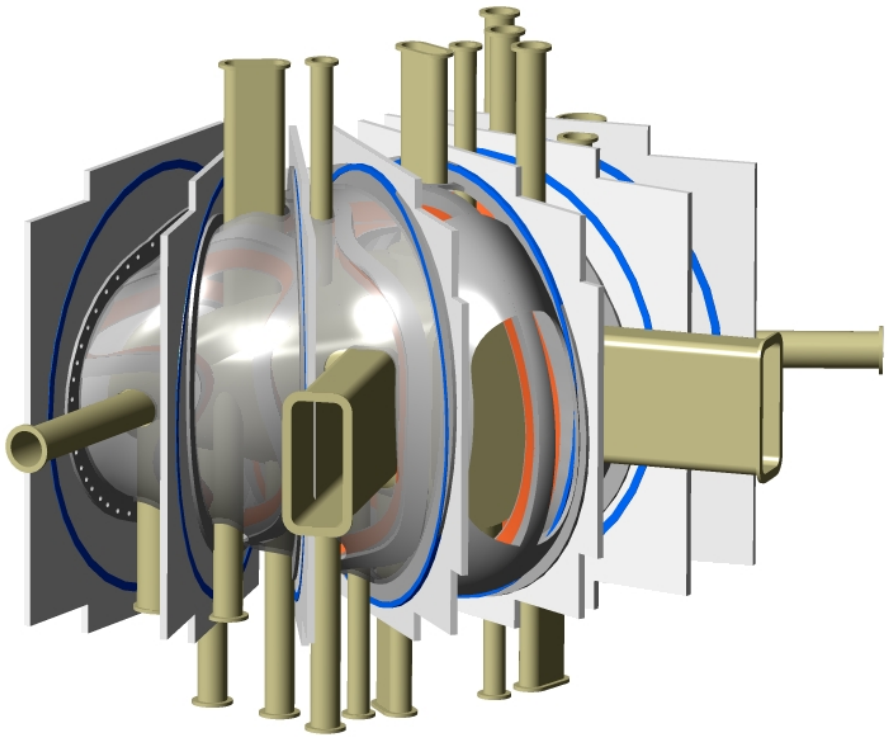

After Attaching Port Extensions

Assembly of 3 Field Periods

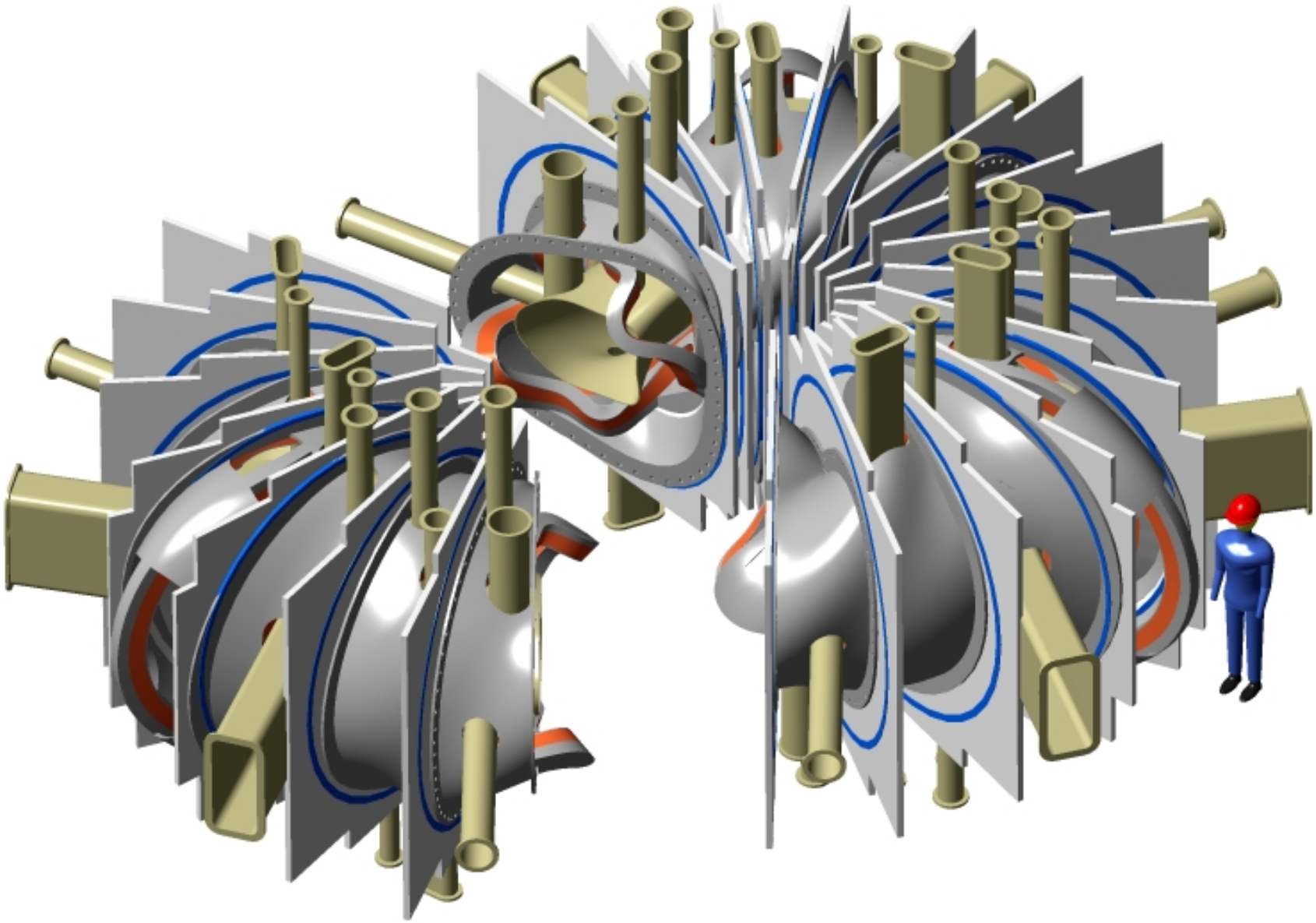

Modular Coil Assembly

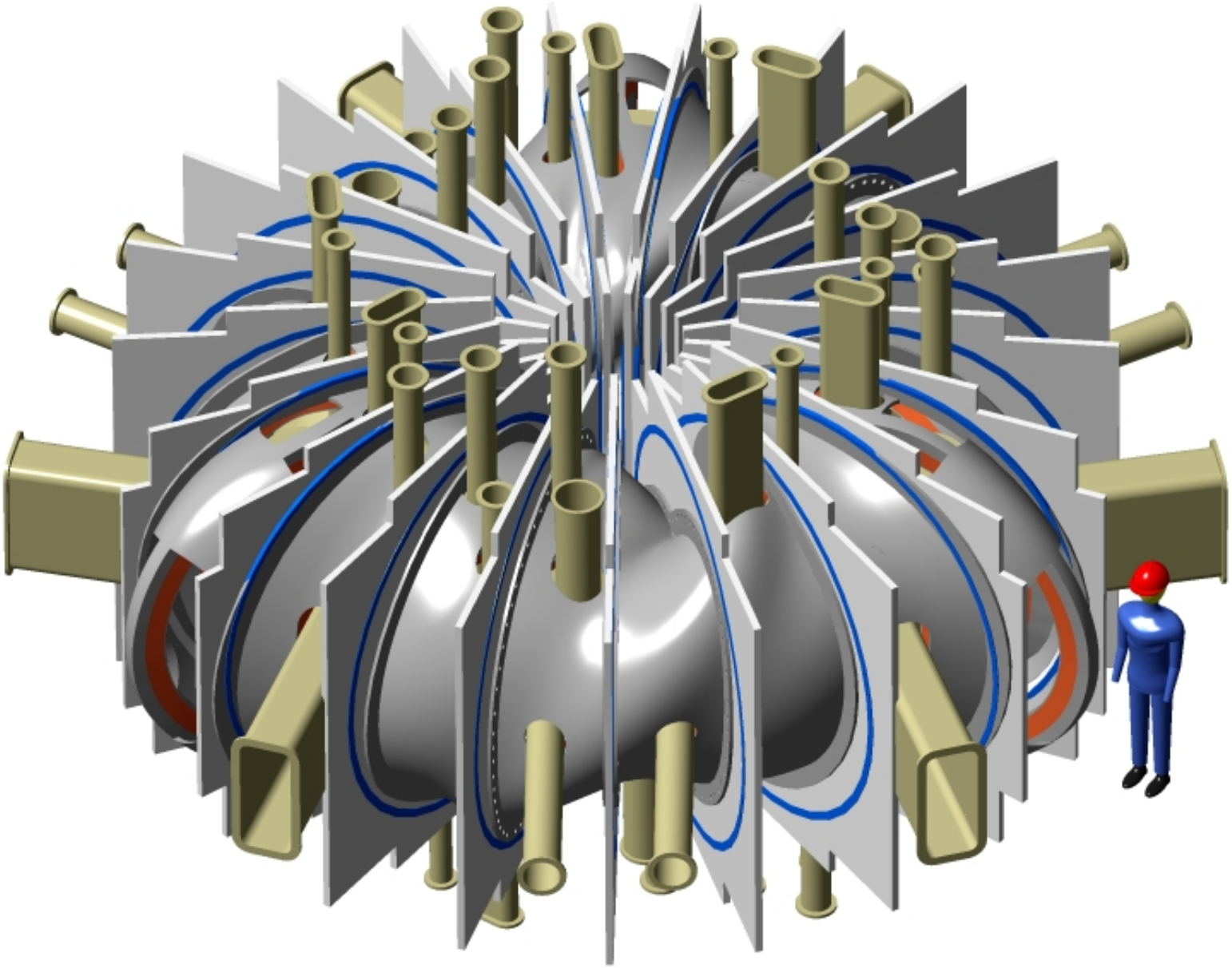

Symmetry Coil Modification

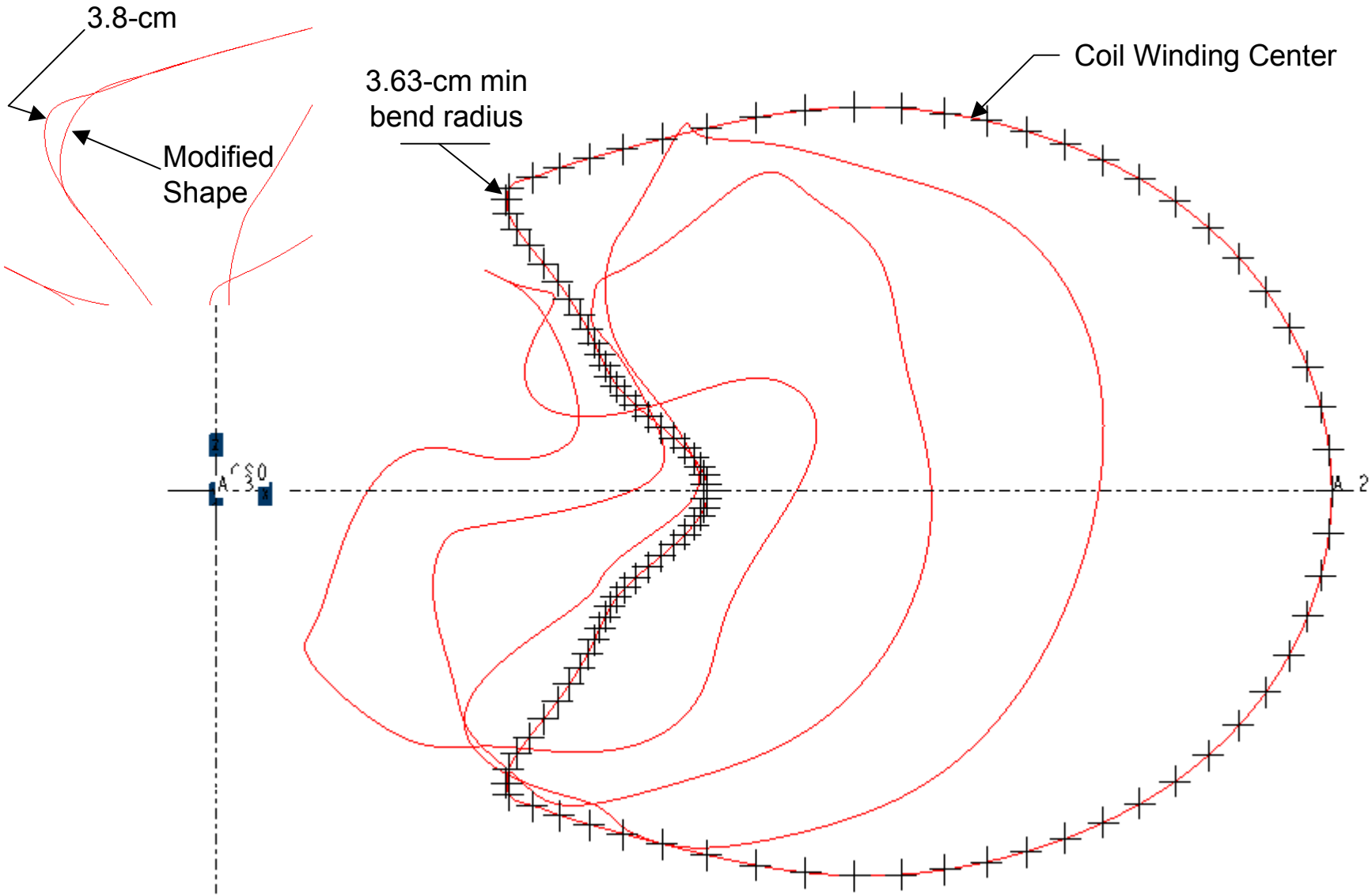

Structural Shell Modification

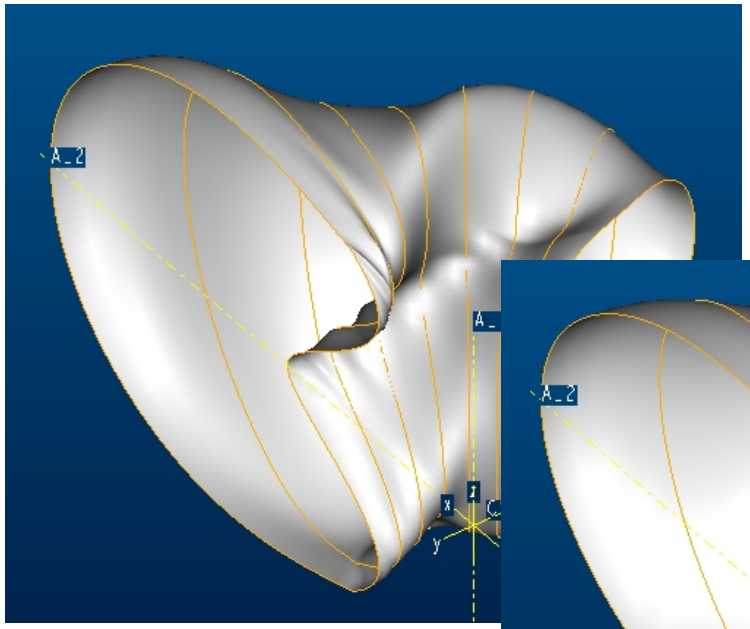

Conformal to Winding Surf

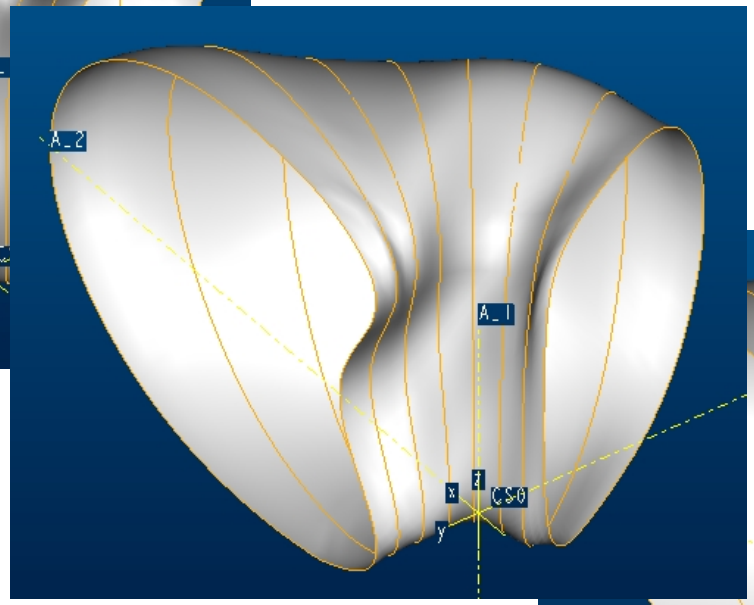

In-between shape

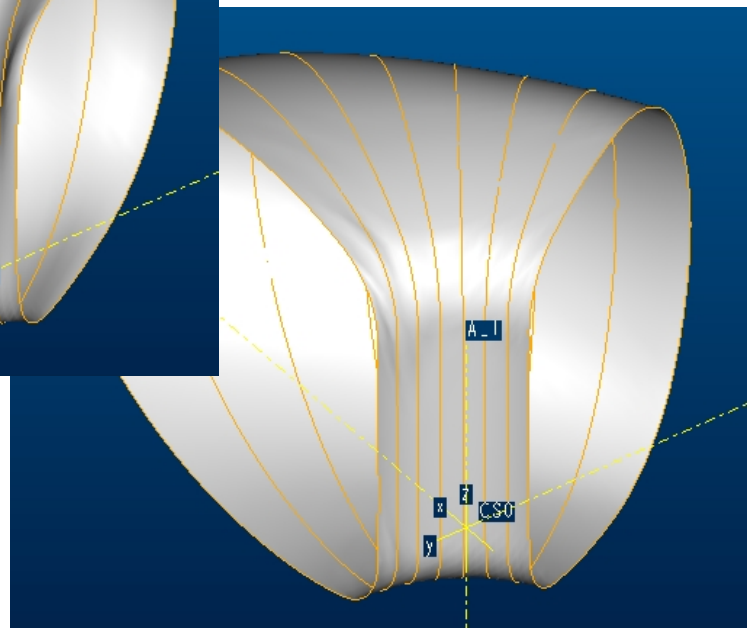

Axisymmetric

Trim Coils

Requirements:

- Provide field correction TBD
- Locate between vessel and modular coils

Design Concept:

- Initial concept based on m=5, m=6 helical windings
- Further work on hold

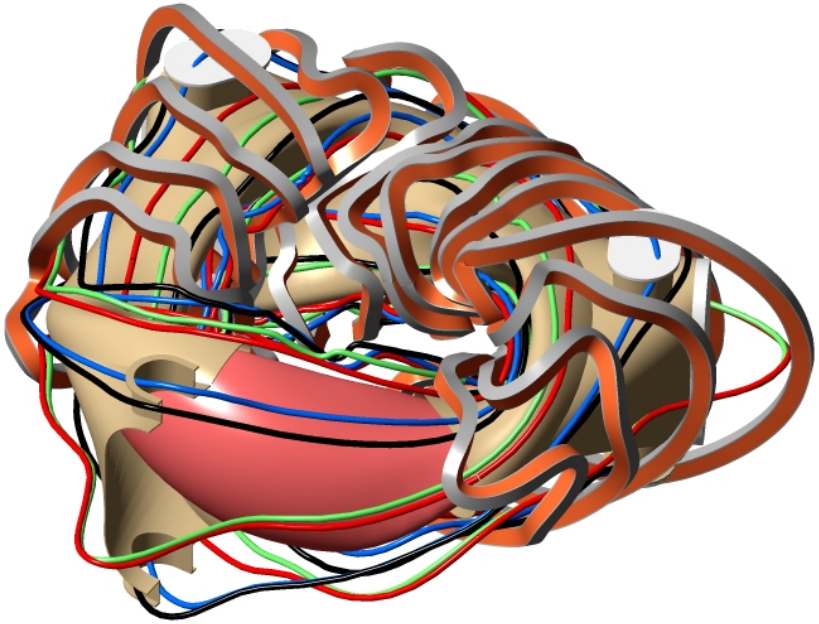

Issues and Near-Term Tasks

- Modular Coil Structure Feasibility
  - Complete modifications to coils / structural shell
  - Prepare drawings, STL models for use in vendor visits
  - Prepare FEM-specific models for EM, structural analysis
- PFCs and Vacuum Vessel
  - Complete modifications to shell, port extensions, cryostat interface
- Cryostat
  - Define scheme for vacuum vessel interface, fabrication and assembly
- Base Support Structure
  - Develop concept for costing