NCSX Engineering Design Document

Design Description
Vacuum Vessel and In-vessel Components
(WBS 11, 12)

NCSX Preliminary Design Review

October 7-9, 200

Table of Contents

1 Design Overview 1

2 Design Requirements and Constraints 3

3 Design Description and Performance 4

3.1 Vacuum Vessel 4

3.2 In-Vessel Components 15

4 Design Basis 18

5 Design Implementation 37

6 Reliability, Maintainability, and Safety 38

7 Cost and Schedule 39

8 Risk Management 40

Table of Figures

Figure 1 Cut-Away View of the Stellarator Core Assembly 1

Figure 2 Space allocation between plasma and modular coils 2

Figure 3 Vacuum vessel geometry showing thermal insulation 6

Figure 4 Vacuum Vessel dimensions 7

Figure 5 VV Port Arrangement 8

Figure 6 Vacuum vessel vertical and lateral supports 9

Figure 7 Typical Vacuum Vessel shell segmentation 9

Figure 8 Vacuum Vessel port stub concept 10

Figure 9 Vessel with cooling line tracing 11

Figure 10 Vessel assembly joint spacer and weld prep concept 12

Figure 11 Final assemby of three field periods 12

Figure 12 Neutral Beam Injection into plasma 13

Figure 13 Inboard RF Launcher Concept 14

Figure 14 Removable Port Cover for Personnel Access 15

Figure 15 Cross-Section of Limiter Concept at VV Field Joints 16

Figure 16 Internal Liner with Full Complement of Panels 17

Figure 17 Panel-to-Rib Attachment Concept 18

Figure 18 Vacuum vessel geometry optimization process 19

Figure 19 Finite (Nastran/Spark) Model of 120 degree vacuum vessel period 21

Figure 20 Locations For Vessel Vertical Supports 21

Figure 21 Radial (R) Displacement Contours for atmospheric + gravity loading (SC#1 23

Figure 22 Vertical (Z) Displacement Contours for atmospheric + gravity loading (SC#1) 23

Figure 23 Tresca stress contours for atmospheric + gravity loading (SC#1) 24

Figure 24 E-M forces on Vessel for 320kA Vertical Plasma Disruption (VDE-SC#3 - looking outboard from machine center – Inductive solution) 25

Figure 25 Vertical (Z) Displacement Contours for atmospheric + gravity loading + 320kA 25

Figure 26 Tresca Stress Contours for atmospheric + gravity loading + 320kA Vertical Disruption (VDE-SC#3), Peak: @Nozzle/Shell intersection 26

Figure 27 Minor Principle Stress (Z2) Contours for atmospheric + gravity loading+ 320kA Vertical (Dn.) Disruption (VDE-SC#3b), Peak: @Nozzle/Shell intersection 26

Figure 28 Shape Deformation From Buckling Analysis 27

Figure 29 Thermal Ratcheting of VV Temperature 29

Figure 30 Schematic of NCSX Core Component Thermal Balance 31

Figure 31 Time to temperature during bakeout for PFCs 32

Figure 32 Panel Mounting Schematic **33**
Figure 33 Thermal Response of Shielded Tiles **33**
Figure 34 Maximum Heat Flux v. Heating Pulse Length **34**
Figure 35 Tresca Stresses From 350kA Disruption **36**
Figure 36 Prototype Vacuum Vessel Segment (PVVS) **38**

Tables

Table 1 NCSX Parameters 1
Table 2 Requirements for the Vacuum Vessel and In-Vessel Components 3
Table 3 Vacuum Vessel Parameters 6
Table 4 Vacuum Vessel Port Dimensions 8
Table 5 Material Properties for the VV and PFCs 20
Table 6 Disruption Load Summary 22
Table 7 Stress and Deflection Analysis Summary 27
Table 8 VV and PFC Operational Parameters 29
Table 9 Insulation thicknesses assumed in study 31
Table 10 Heat Loss to VV From PFCs 32
Table 11 PFC Thermo-Hydraulic Parameters 34
Table 12 Net Forces on One Liner Field Period 35
Table 13 Summary of Stresses in Disruption Analysis of Liner 36
Table 14 WBS listing for vacuum vessel and PFCs 39
Table 15 VV Cost Summary ($k, without contingency) 39
Table 16 Vacuum Vessel and PFC cost summary by year of expenditure (WBS Level 2) 40

1 DESIGN OVERVIEW

The stellarator core is an assembly of four magnet systems that surround a highly shaped plasma and vacuum chamber. The coils provide the magnetic field required for plasma shaping and position control, inductive current drive, and error field correction. The vacuum vessel and plasma facing components are designed to produce a high vacuum plasma environment with access for heating, pumping, diagnostics, and maintenance. All of the NCSX coil sets are cryo-resistive and operate at liquid nitrogen temperatures, so the entire system is surrounded by a cryostat. Figure 1 shows a cutaway view of the stellarator core assembly. This document describes the vacuum vessel and in-vessel components.

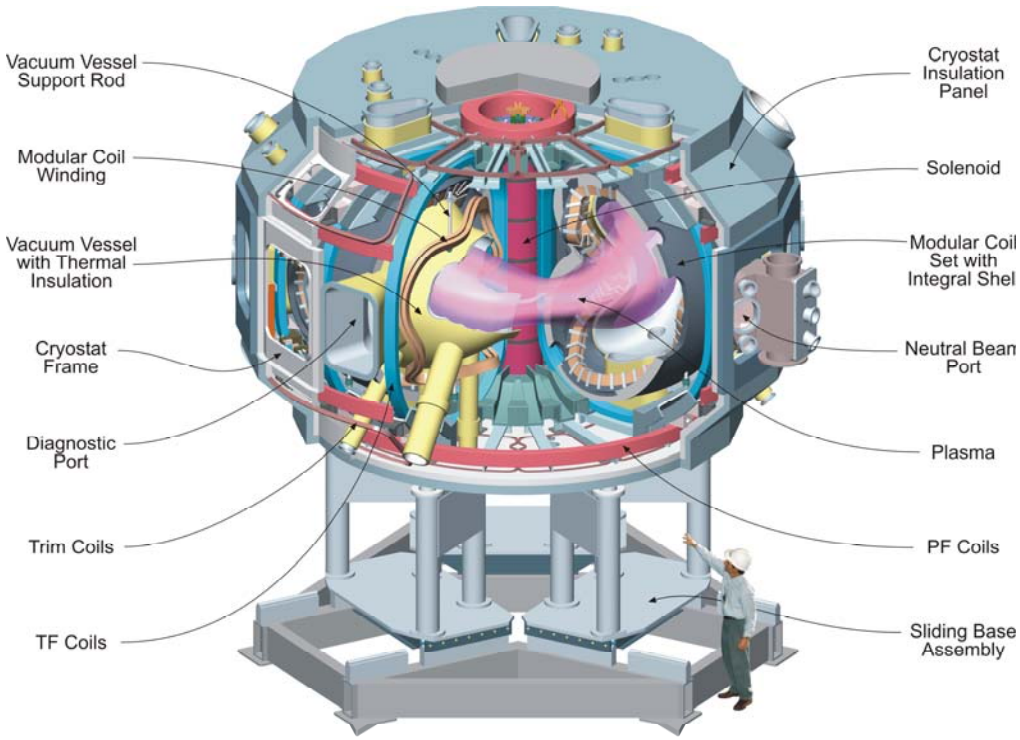

Figure 1 Cut-Away View of the Stellarator Core Assembly

Table 1 NCSX Parameters

Parameter	Value
Major radius	1.4 m
Minor radius	0.33 m
B_{max}	2 T
Plasma current	Up to 320 kA
TF coil configuration	+/- 0.5 T, 1/R (18 coils)
Plasma heating methods	NBI
	ICH and ECH (future upgrades)

The overall parameters of NCSX are listed in Table 1. The principal feature of NCSX is the set of modular coils that surround and shape the plasma. There are three field periods with 6 coils per period, for a total of 18 coils.

Nestled inside the coil set is a highly shaped, three-period vacuum vessel, which means the geometry repeats every 120º. Stellarator symmetry also causes the geometry to be mirrored every 60º so that the top and bottom sections of the first (0º to 60º) segment can be flipped over and serve as the corresponding sections of the adjacent (60º to 120º) segment. The vessel will be constructed in full field periods and joined together at welded joints. Numerous ports are provided for heating, diagnostics, and maintenance access. Several port sizes and shapes are used to best utilize the limited access between modular coils.

The PFCs inside the vessel will be introduced in stages after initial operation. The sequence of upgrades will start with a simple set of limiter tiles at the three v=1/2 symmetry planes which correspond to the vessel field joints. Later upgrades will provide a contoured liner, constructed of molded carbon fiber composite (CFC) panels mounted on a frame of poloidal rings.

One of the challenges for the design is the allocation of space among the components. Specially developed computer codes have been used to optimize the winding path trajectory to satisfy stringent physics requirements while not violating engineering constraints on bending radii, coil-to-coil spacing, coil-to-plasma spacing, and access for neutral beam injection. The coil cross section is further limited by the space requirements for the PFCs, support ribs, vacuum vessel, thermal insulation, and coil clamping features. The space allocations are shown in Figure 2

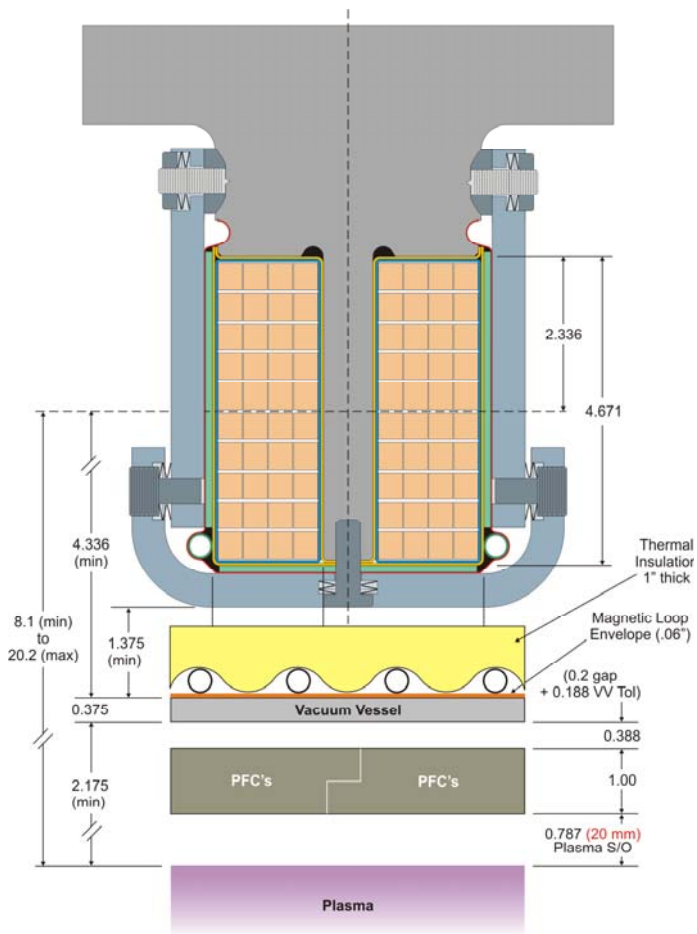

Figure 2 Space allocation between plasma and modular coils

2 DESIGN REQUIREMENTS AND CONSTRAINTS

The vacuum vessel and in-vessel components are required to provide ultra-high vacuum conditions and power handling capability for high performance plasma operation. The basic requirements are listed in Table 2. These requirements flow from the **General Requirements Document**, provided as part of the Preliminary Design Report.

Table 2 Requirements for the Vacuum Vessel and In-Vessel Components

Vacuum vessel requirements	
General /geometry	The vessel will fill as much of the coil-bore volume as possible consistent with assembly of the coils over the vessel and necessary insulation space.
	The inner surface of the vacuum vessel shall be electro-polished (or treated to produce an equivalent, cleanable surface.)
	Access ports shall be provided for diagnostics, heating, and maintenance / reconfiguration of in-vessel components.
	Space shall be provided on the inboard side, at the v=1/2 symmetry plane, for the installation of ICRH launchers as a future upgrade
	The design shall be capable of accommodating internal trim coils for high-poloidal mode number helical field perturbations
Plasma facing components (PFCs) upgrade requirements	
General	PFCs are required to support power and particle-handling research, protect the vacuum vessel and in-vessel components from the plasma and from neutral beam shine-through., and limit sputtering of high Z impurities.
	The design is able to accommodate the installation of an extensive system of PFCs through future upgrades, as required by the research program.
	Areas which are expected to come in contact with the plasma shall be armored with carbon-based, i.e. graphite or carbon fiber composite (CFC) components, which shall be bakeable in situ to 350C
Upgrade configurations (to be implemented during operations)	Future upgrades shall be accommodated by designing a flexible system that can be implemented in stages. It shall provide the potential to implement a slot divertor with active pumping in a sealed plenum, up to 100% wall coverage, capability to electrically bias regions of the plasma boundary relative to each other and the vacuum vessel..
Power handling	The upgrade configuration shall be capable of accommodating heat loads associated with up to 12MW of plasma heating power for 1.2s (including 6MW of neutral beam injection)

Vacuum Vessel and In-vessel Component Requirements	
Disruption requirements	The device shall be designed to withstand electromagnetic forces due to major disruptions characterized by the disappearance of the plasma at the maximum plasma current (320 kA).
Field errors	The toroidal flux in island regions due to fabrication errors, magnetic materials, or eddy currents shall not exceed 10% of the total toroidal flux in the plasma (including field error compensation).
	The relative magnetic permeability of the vacuum vessel and in-vessel components shall be less than 1.02 except in welded regions, where the relative magnetic permeability shall be less than 1.05.
Electrical (eddy current) requirements	Eddy currents in conducting structures surrounding the plasma shall not give rise to unacceptable field errors.
	The vessel and in-vessel structures shall be designed with stellarator symmetry to minimize field errors from unsymmetrical eddy currents.
External kink mode stabilization	The time constant of the longest-lived eddy current eigenmode in the vacuum vessel and in-vessel structures must be less than 10 ms.
Temperature requirements	
Bakeout temperature	The vacuum vessel shall be bakeable at 150C.
	The vacuum vessel shall be compatible with the capability to bake carbon plasma facing components at 350C (as a future upgrade).
Pre-shot operating temperature	The pre-shot operating temperature of the vacuum vessel shall be capable of being maintained in the range of 20C-100C without ratcheting.
	The pre-shot operating temperature of carbon-based plasma facing components will be such that the peak temperature during a shot will not exceed 1200C to avoid excessive carbon influx

3 DESIGN DESCRIPTION AND PERFORMANCE

3.1 Vacuum Vessel

The vacuum vessel is a highly shaped, three-period structure, i.e. a geometry that repeats every 120º toroidally. The geometry also has stellarator symmetry, i.e. it is mirrored every 60º so that the top and bottom sections of the first (0º to 60º) segment can be flipped over and serve as the corresponding sections of the adjacent (60º to 120º) segment. Table 3 lists the main vacuum vessel parameters. Figure 3 and Figure 4 illustrate the basic vessel geometry.

The vessel will be baked to 150ºC and operate with a nominal operating temperature of 40ºC. The vessel is maintained at temperature by helium gas circulated through tracing lines attached to the vessel exterior. The vessel is insulated on its exterior surface to provide thermal isolation from the modular coils, which operate at cryogenic temperature (80K). Inconel 625 is the material chosen for the vessel shell. It was selected over stainless steel primarily because of its low permeability (both in the parent and weld material) and high electrical resistivity. The electrical resistivity of Inconel 625 is 70% higher than for austenitic stainless steel. Higher resistivity results in a shorter vessel time constant, which is beneficial for the fast field penetration required for plasma current profile control.

Using Inconel also avoids the permeability issues associated with stainless steel. Stainless steel is prone to have elevated permeability when subject to severe cold working or when welded. Furthermore, the regions of elevated

permeability are not necessarily uniform from one period to the next. Non-uniform regions of elevated permeability are a concern because they are a potential source of field errors.

Table 3 Vacuum Vessel Parameters

Physical parameters	
Material	Inconel 625
Thickness	0.95 cm (3/8 in)
Time constant	5.3 ms (calculated)
Inside surface area (without ports)	40.3 m^2
Inside surface area (with ports)	96.3 m^2
Enclosed volume (without ports)	10.2 m^3
Enclosed volume (with ports)	~20 m^3
Weight with ports (without pfc's)	9400 kg
Operating parameters	
PFC bakeout temperature	350ºC
Vessel bakeout temperature	150ºC
Vessel nominal operating temperature	40ºC
Maximum plasma heat load	12 MW
Heating pulse duration (max)	1.2 seconds
Cool down time between shots	15 minutes

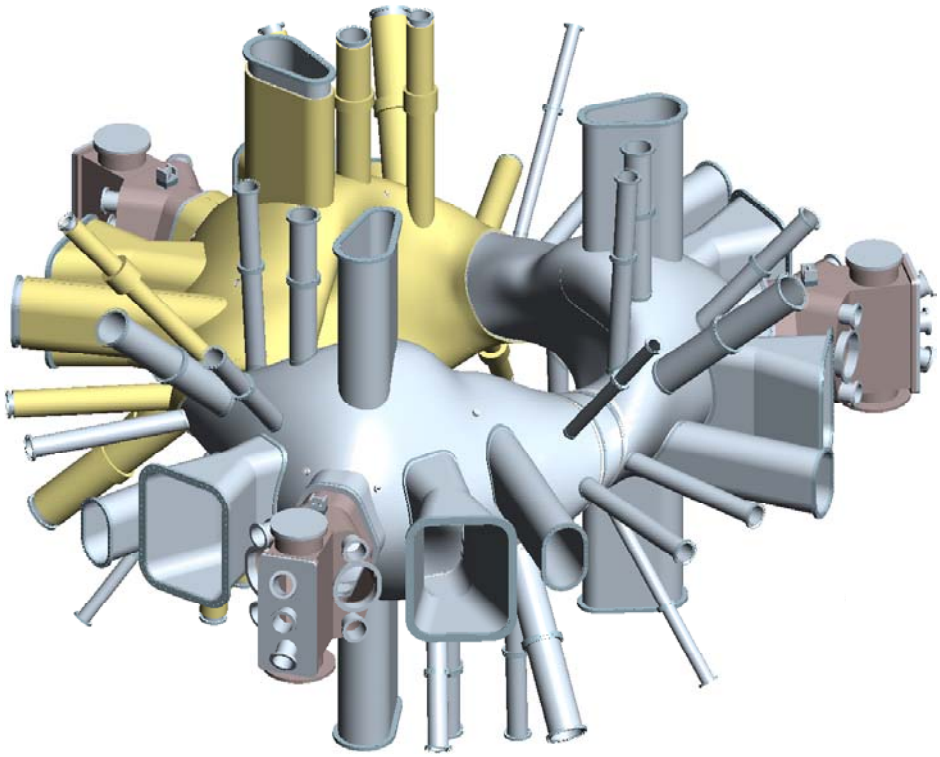

Figure 3 Vacuum vessel geometry showing thermal insulation

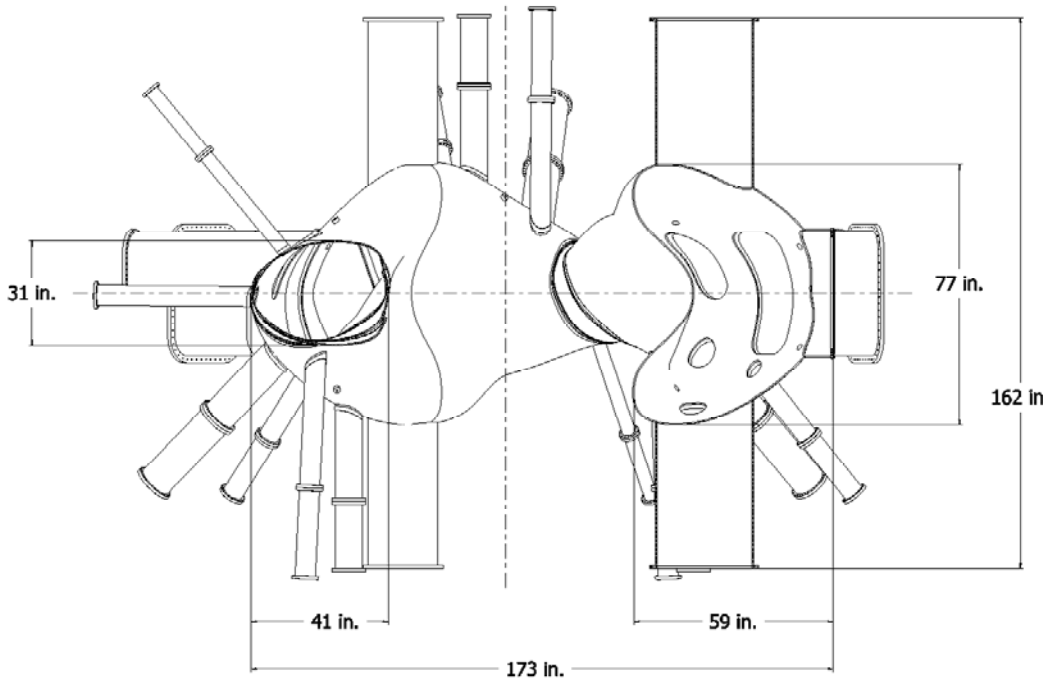

Figure 4 Vacuum Vessel dimensions

The port configuration is illustrated in Figure 5. Several sizes of radial and vertical ports, tabulated in Table 4, are used to best utilize the limited access between modular coils. The arrangement is designed to meet access requirements for the diagnostics, including future upgrades. The large neutral beam ports and the ports immediately adjacent to the NBI ports are designed to permit personnel access into the vacuum vessel interior for final assembly of the three vessel sub-assemblies and maintenance of diagnostics and in-vessel components. The neutral beam ports and vertical ports (12a and 12b) will be installed before delivery since they are not required to slip through modular coils. All other ports will be welded onto the vessel body during pre-assembly, after installation of the modular and TF coils, prior to final assembly. Port stubs are provided on the vessel which permit the modular coils to slip on first, followed by welding of the port extensions from the inside.

The vessel will be supported from the modular coil structure via vertical support hangers and radial guide lugs, designed for ease of adjustment and minimal heat transfer between the two structures. The vessel gravity load is taken by two hangers located on the top of each field period. Two lower hangers, in each period, are used to react vertical dynamic loads. Radial supports, located at the top and bottom of each neutral beam duct, react lateral loads. The hangar geometry is illustrated in Figure 6. Significant relative thermal growth must be accommodated when the modular coils are cooled to cryogenic temperatures or when the vacuum vessel is heated for bakeout.

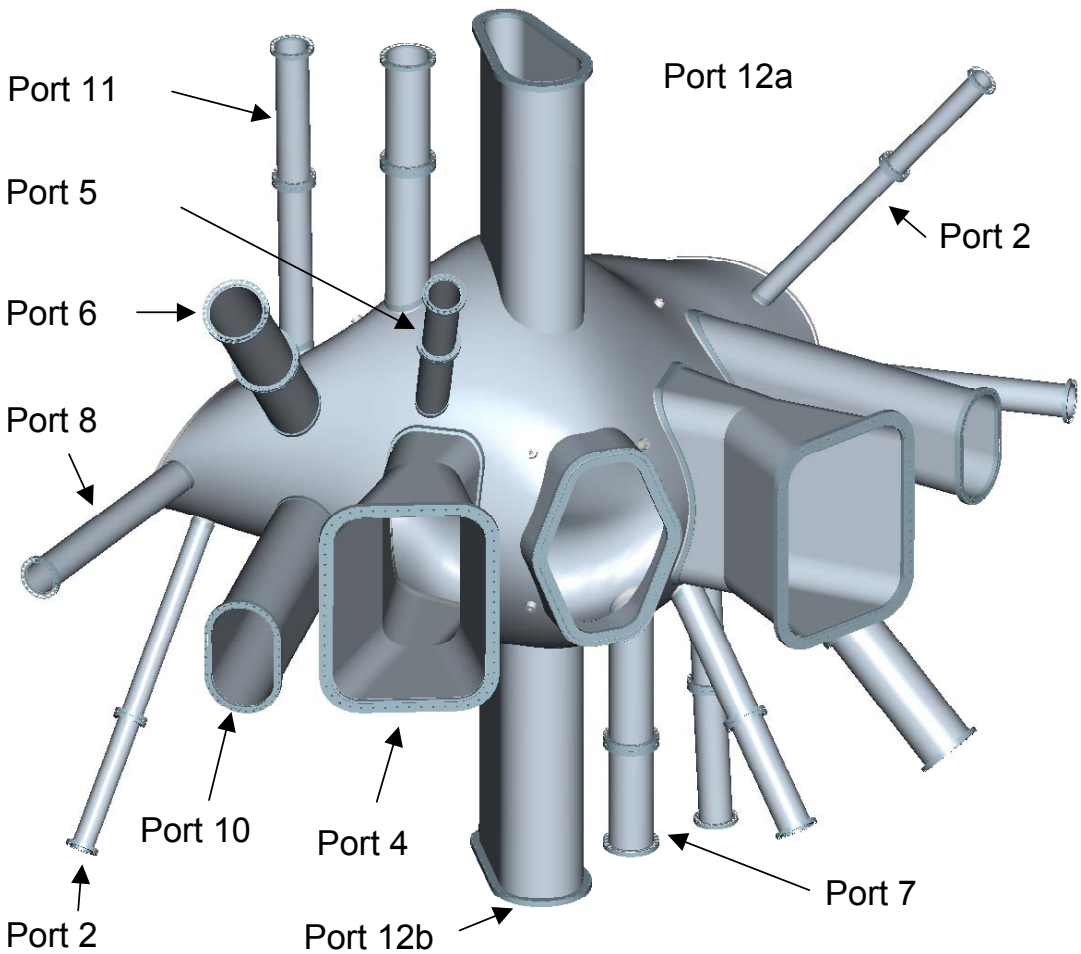

Figure 5 VV Port Arrangement

Table 4 Vacuum Vessel Port Dimensions

Port ID	No. per period	O.D. (inches)	total	Port ID	No. per period	O.D. (inches)	total
2	2	4 .	6	10	2	20 x 12	6
4	2	25 at plasma, 13.8 at neck, 27 at cyrostat x 36 tall	6	11	2	6	6
5	2	6	6	12	2	9 ϕ x 15 ϕ x 17.3 c-c	6
6	2	10	6	Neutral Beam	1	38 x 28	3
7	2	8	6	S1	2	2	6
8	2	6	6	S2	1	2	3
9	2	6	6	Total number of ports			72

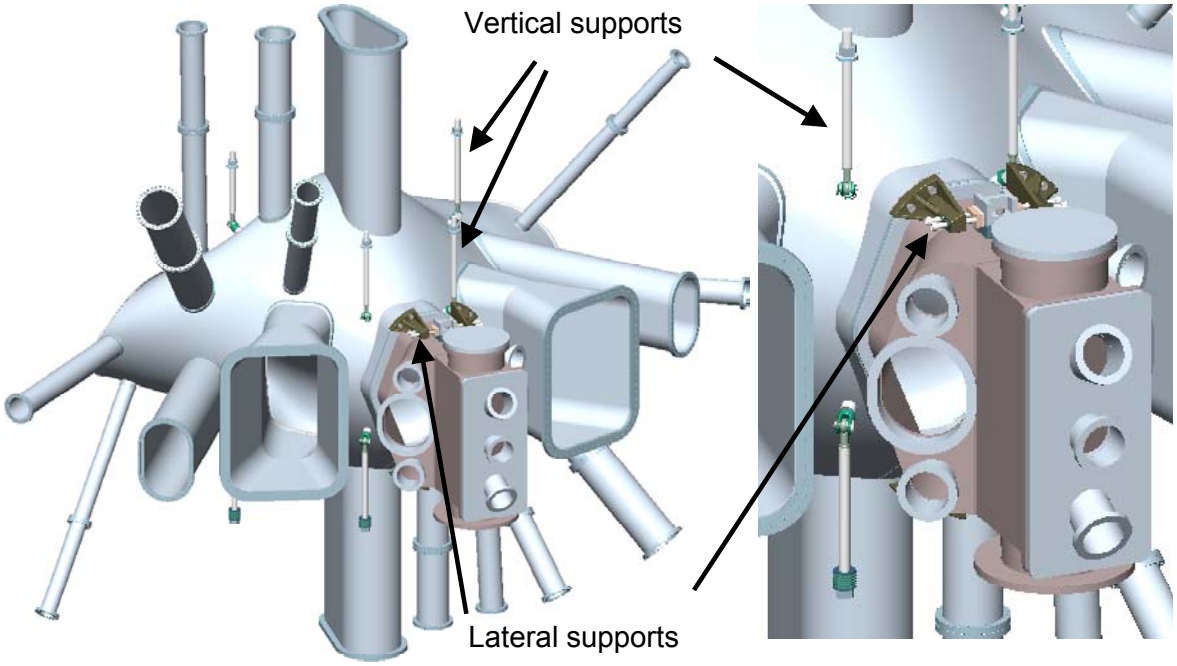

Figure 6 Vacuum vessel vertical and lateral supports

Fabrication is a significant challenge, since the vessel has a contour closely conforming to the plasma on the inboard side. The vessel shell is formed by pressing plate sections, then welding them together to form the finished shape. Segmentation of the vessel is driven by assembly requirements and inherent fabrication limitations. Fabrication by pressing requires the panel sections to be removable from the tooling dies. This requirement must mesh with the desire for half-period segments. The result is that the number and geometry of poloidal segments is dictated by the die contour. A first cut at the segmentation indicates that the half period can be formed with four poloidal sections, as shown in Figure 7**.** For practicality, die size limitations may require more sections than this.

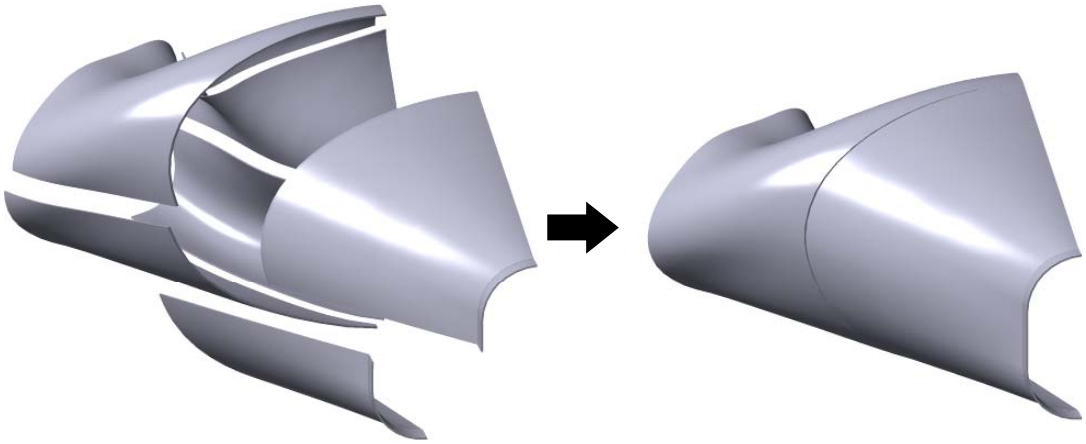

Figure 7 Typical Vacuum Vessel shell segmentation

The form tolerance of the vessel must be very accurate in the inboard region, with a tolerance of +/- 0.188 inches to provide adequate clearance to both the coils and the plasma. On the outboard side the tolerance can be relaxed significantly, if needed to match standard fabrication processes, to about +/- 0.5 inches. However, the present design documents require a contour tolerance of +/- 0.188 inches everywhere. These tolerances must be held after the vessel is completely welded and assembled, so intermediate heat treatments during fabrication may be necessary.

Port stubs are included in the design to provide a better interface for attaching the port extensions during final assembly. The concept for these stubs is illustrated in Figure 8. Each port extension/flange assembly is positioned and welded to the vacuum vessel before cutting out the vessel holes. Leak checking of the torus is performed, followed by cutting of the port extension and final machining of the stub. The port stub should provide reinforcement for the vessel during final assembly and help minimize distortion. Prototype testing will be conducted by the fabricator to confirm this.

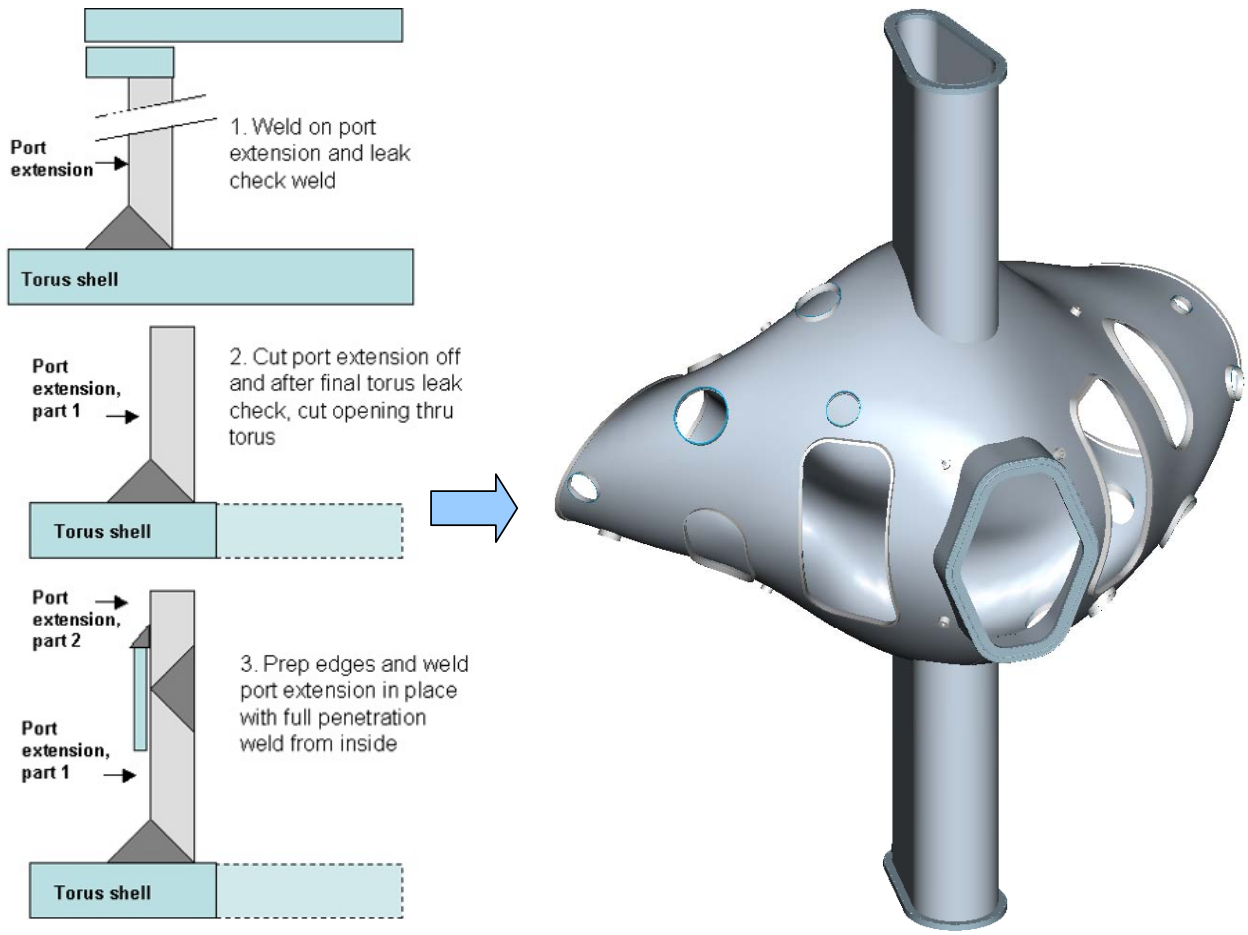

Figure 8 Vacuum Vessel port stub concept

Coolant tracing is installed on the outside surface of the vessel prior to field period assembly, as shown in Figure 9. To minimize distortion of the vessel, these lines are not skip welded or brazed, but are attached by clips spot-welded to the vessel, on approximately 10 cm centers. Heat transfer may be enhanced with heat conductive epoxy made for this purpose. The coolant gas will be supplied to the torus bottom in a 3 inch (OD) header. Three, 2 inch (OD), distribution lines will feed to the large vertical port flanges, one at the bottom of each period, where a 1.5 inch (OD) "C" shaped header will feed the 16, 3/8 inch feeder lines (32 total) on each side of the port. A return header configuration identical to the supply header is located at the top of the torus. An effort will be made to keep spaces

and lengths of the coolant lines approximately the same throughout, to balance the flow and assure even heat distribution.

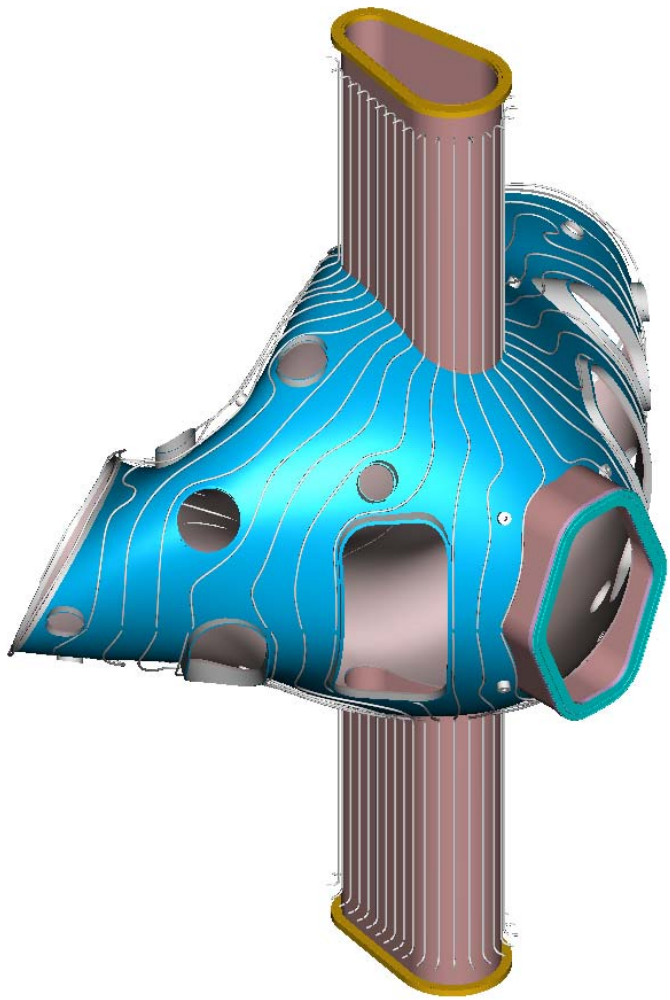

Figure 9 Vessel with cooling line tracing

The final assembly requires precise fit. To accomplish this, weld spacers are provided between the mating flanges of the vessel periods. Any misalignment that is encountered can be compensated by machining the spacers for a custom fit. Figure 10 illustrates the geometry of the joints between the weld spacer and the vessel segments. All welding must be done from inside the vessel, since the outside is obscured by the modular coil assembly. The present concept for the weld joint incorporates a flexible seal to retain cover gas on the back side of the weld and to shield the thermal insulation and modular coils from the welding process. Earlier vessel design studies incorporated a bolted, o-ring seal spacer but evolution of the vessel geometry reduced the available space and made this approach impractical. It was also necessary to incline the spacer/vessel interface 25 degrees from vertical in the toroidal direction to clear the modular coils as they slip over the vessel.

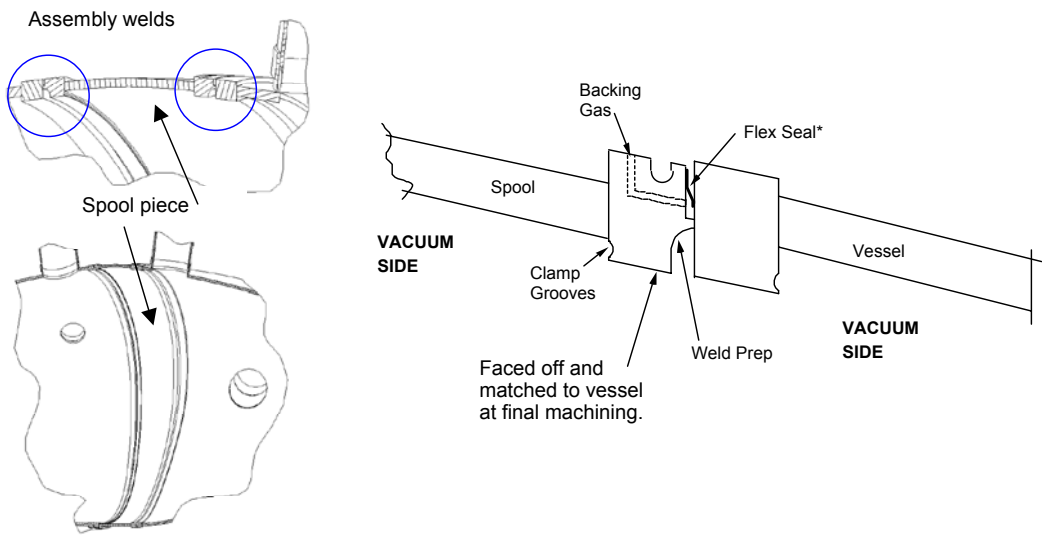

Figure 10 Vessel assembly joint spacer and weld prep concept

As noted previously, the installation of the port extensions will occur during final machine assembly. This requires that the vacuum vessel be placed inside the modular coils, by sliding the coils over each end of the vessel subassembly. The port extensions are then slipped onto the port stubs and welded on from inside. The three sub-assemblies (periods), complete with coils and spacers are welded internally into a final torus at the oblate (wide) sections. There is also no access from the outside to reach an external weld joint. Achieving quality welds by welding on the inside with the tight space constraints and contorted geometry requires special design features to be incorporated into the weld joint. A metal flex-seal and gas porting will provide backing gas during welding of the spacer to the vessel mating flanges. Temporary internal lugs will be provided to permit clamping the sections together and help minimize the weld gap. Figure 11 illustrates three segments being brought together to complete assembly of the vacuum vessel

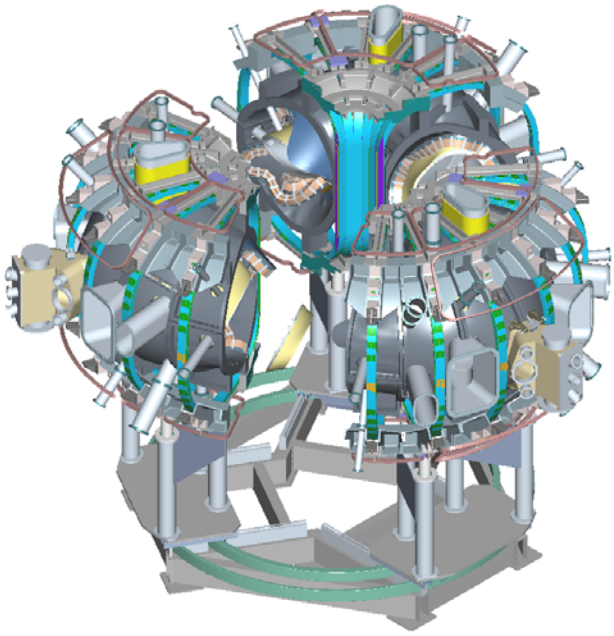

Figure 11 Final assemby of three field periods

Access Features

Diagnostic access

Port locations were defined based on available space between modular coils, trim coils, PF and TF coils, and structure. The ports are located between these obstructions and, for the most part, aimed in radial planes directly at the magnetic axis. As discussed above, the sizes and numbers of ports appear well matched to our needs for diagnostic access.

Access for plasma heating

The requirement for neutral beam access is to accommodate one of the PBX-M neutral beams in the initial configuration. In addition, the device design must accommodate all four PBX-M neutral beams via future upgrades. Two of these beams must be oriented for tangential co-injection, one must be in the counter- direction, and the last must be capable of being oriented in either the co- or counter directions.

The neutral beams will be injected through ports centered on the v=0 (bean-shaped) cross-section. Figure 12shows the device configured for two co- and two counter-injected neutral beams. If the fourth beamline was configured for co-injection, it would be located at the remaining v=0 plane.

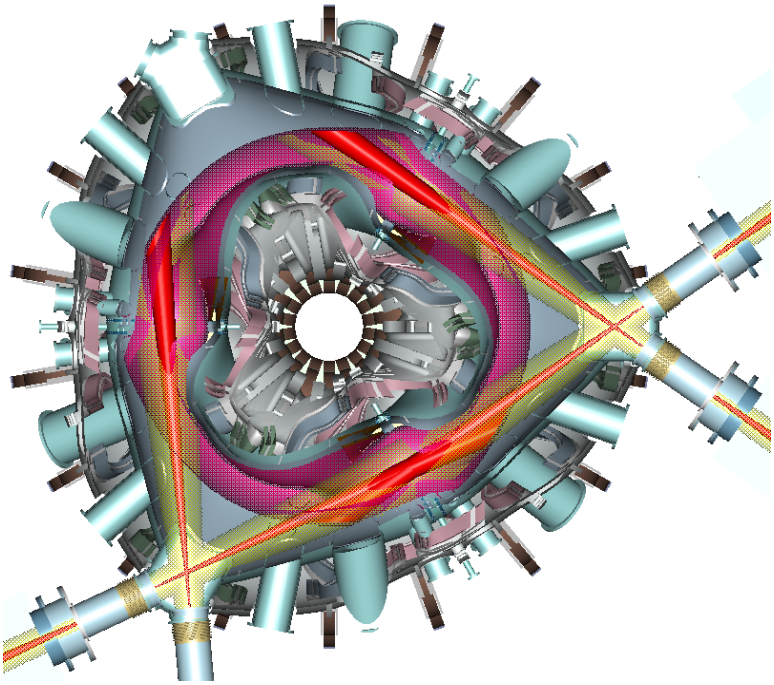

Figure 12 Neutral Beam Injection into plasma

NCSX is being designed to accommodate 6 MW of ion cyclotron resonant frequency (ICRF) heating in addition to neutral beams. The leading candidate for ICRF heating is a 20-30 MHz system that employs a 6-strap design inboard of the plasma at the v=0.5 (the oblate or bullet-shaped cross-section). The envelope required for each strap with Faraday shield is approximately 10 cm deep x 10 cm wide x 50 cm tall. This option is attractive because of the physics advantages derived and because it makes use of existing RF sources at PPPL. Design studies indicate that adequate space exists for the launcher components. A typical system is illustrated in Figure 13. Launchers for 3 MW of ECH power would be installed as upgrades through the large ports.

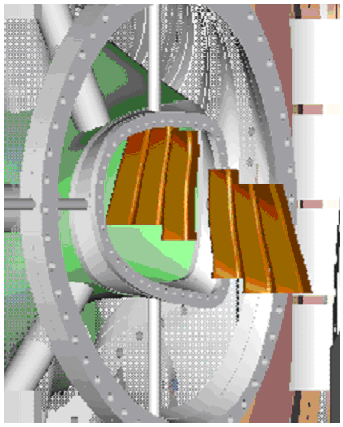

Figure 13 Inboard RF Launcher Concept

Personnel access

Personnel access requirements for different stages of fabrication and operation were considered, including:

- During manufacture – measure, inspect, assemble, and install components
- During field period subassembly – weld/inspect ports; leak check and repair welds; install trim coils, magnetic diagnostics, and PFCs
- During final assembly of vessel – connect vessel segments; clean, leak check, and inspect; complete installation of in-vessel components
- After final assembly of vessel – maintenance and reconfiguration of internal components

Port access is limited because of the modular coils, PF coils, TF coils, and structure supporting the modular coils. The three large ports through which the neutral beams are injected have a clear opening of 33 inches tall by 23 inches wide and are adequate for personnel access into the vacuum vessel. Although in the initial configuration only one of the three ports would have neutral beams installed, it is anticipated that ultimately two or perhaps all three would have equipment installed that would block ready access to the vessel interior. For this reason, the port extensions at these locations are now fitted with large rectangular port covers that can be removed even with two neutral beam injectors installed at the same location. This port is illustrated in Figure 14.

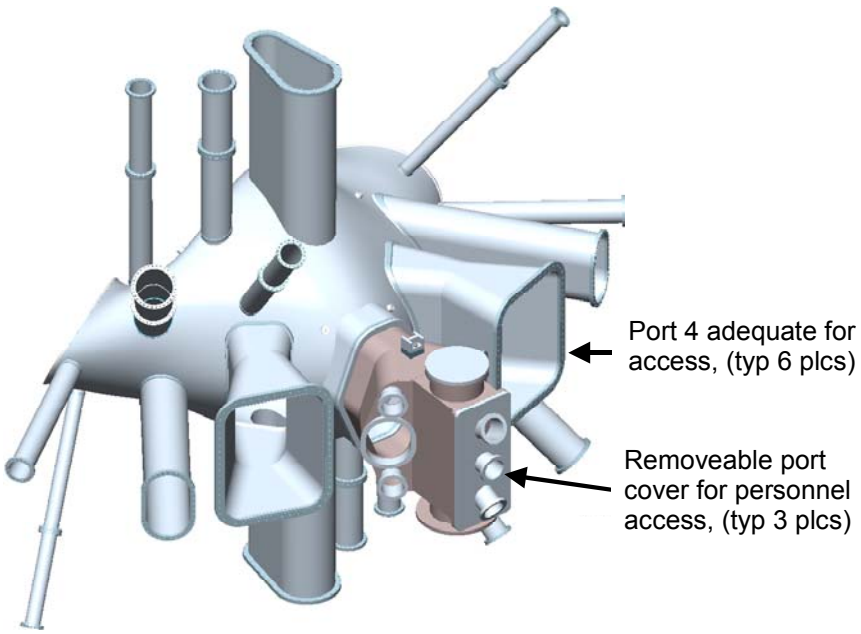

Figure 14 Removable Port Cover for Personnel Access

Alternate routes for personnel access are available through the ports adjacent to the neutral beam ports. These ports have been enlarged during preliminary design to have an hourglass shape with an 13.75 by 36 inch minimum opening. This adds six more ports that would provide adequate openings for personnel.

3.2 In-Vessel Components

Baseline Configuration

PFCs are not part of the baseline NCSX construction project, but a reference PFC configuration has been designed that would provide a limited system adequate for early operation. A set of simple fixed limiter tiles will be attached to ribs mounted to the vessel wall to provide poloidal limiters at those three locations. The tiles bolt to the rib flanges via graphite (Grafoil^R) gaskets. This design permits conduction cooling to the vessel coolant tracing while allowing thermal growth. Upgrade operation may utilize separate cooling on the ribs, to isolate the limiters from the vessel. The limiter locations and design concept are illustrated in Figure 15.

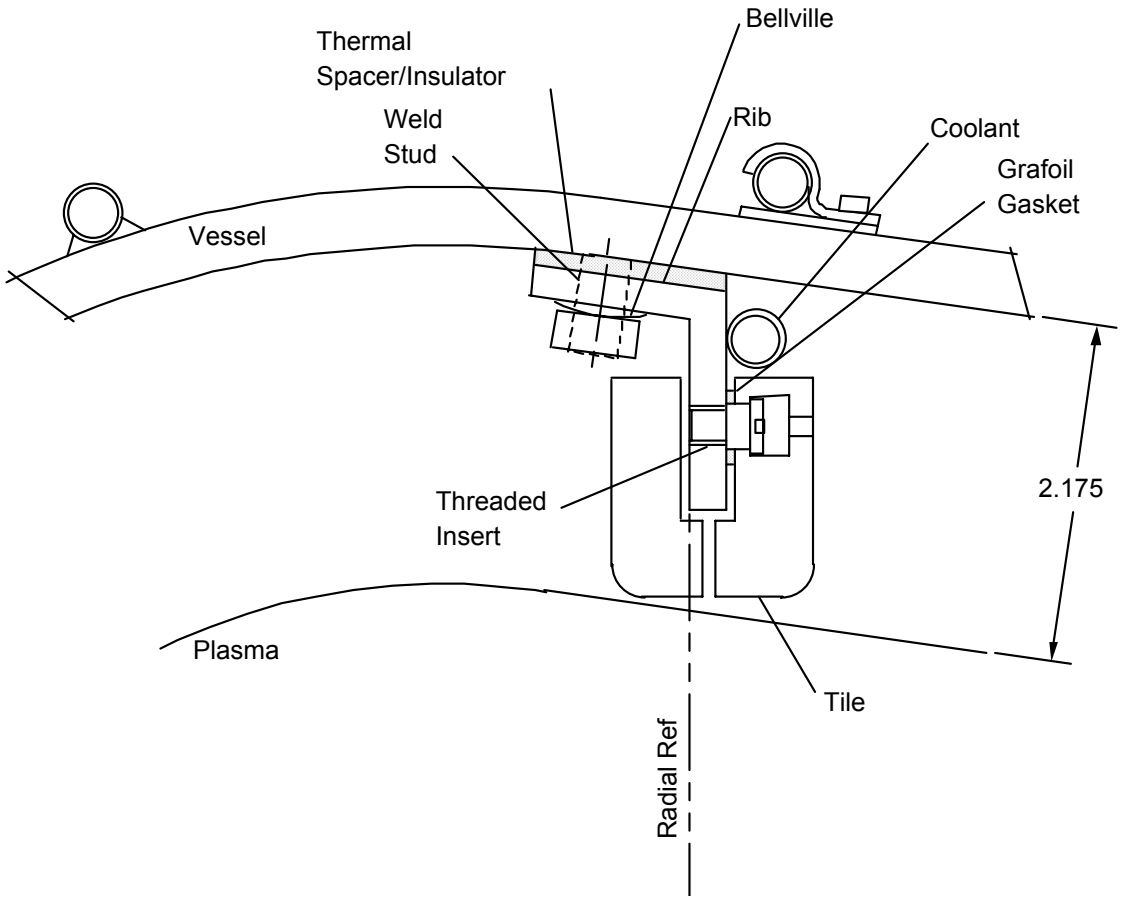

Figure 15 Cross-Section of Limiter Concept at VV Field Joints

Upgrade Configuration

The design is required to accommodate substantial upgrades to the PFCs to meet the requirements for the later stages of the research program, from the Initial Auxiliary Heating Phase onward. To demonstrate that such upgrades are feasible and able to meet requirements, a flexible, re-configurable design concept has been developed. It is a robust concept that can be adapted in its geometrical details and implemented in stages to meet the needs of the research program as it evolves and the detailed requirements are clarified.

The upgrade concept is a contoured liner, one version of which is shown in Figure 16, constructed of molded carbon fiber composite (CFC) panels mounted on a frame of poloidal, gas-cooled ribs. When the full complement of panels is installed, they will shield the entire interior surface of the vessel. It is compatible with staged implementation, such that the support structure and the panels can be installed during later operation. Having an independently supported, bakeable liner avoids the need to design the vacuum vessel and the in-vessel components mounted on the vessel for baking at 350ºC and reduces the heat loads to the cold mass during bakeout. The liner is baked at 350ºC while maintaining the vessel at 150ºC. Radiation heat loads to the vacuum vessel and in-vessel components are reduced by thermal shields mounted on the backside of the panels. During normal operation, the liner will have a lower pre-shot temperature in the range of 20ºC to 150ºC. The molded panels form a continuous shell around the plasma with penetrations for diagnostics, heating, and personnel access. This shell serves many functions. It provides a high heat flux surface in the regions of sharp curvature where the heat flux from the plasma is expected to

be highest. It can act as a belt limiter on the inboard midplane. On the lower half of the shell, it will absorb the power deposited by the beam ions that are promptly lost from the plasma. On the outboard side, the shell serves as armor to protect the vacuum vessel and in-vessel components from heat loads due to neutral beam shine-through. The shell also protects in-vessel components mounted on the vessel, e.g., trim coils and magnetic diagnostics, from heat loads from the plasma.

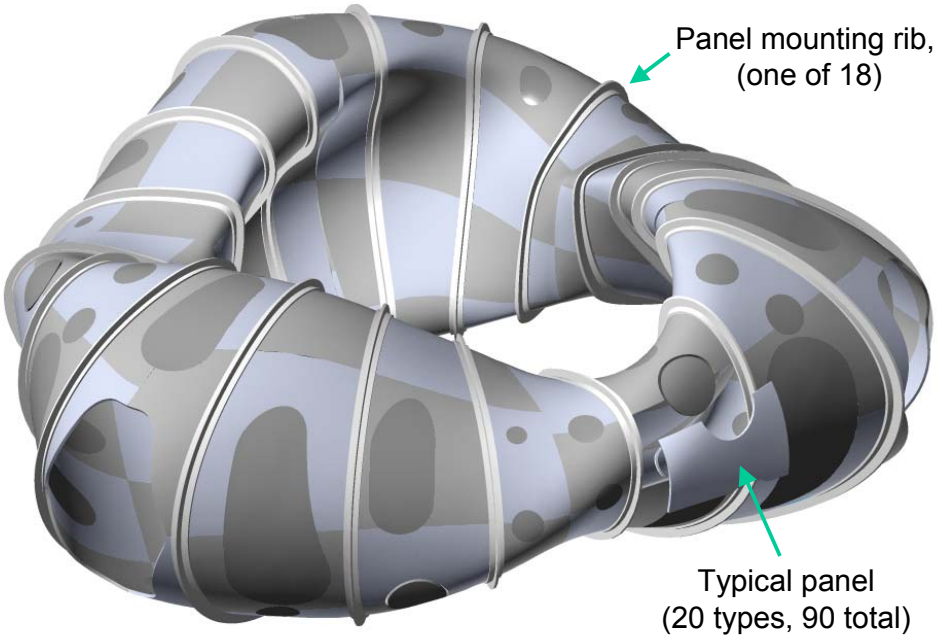

Figure 16 Internal Liner with Full Complement of Panels

The continuous shell allows great flexibility in plasma shaping because any surface that the plasma impinges on can act as a limiter and be resistant to damage from plasma heat loads. The properties of the CFC panels can be tailored to the local heat loads if necessary. More expensive panels with high thermal conductivity can be used in limited regions of higher heat loads. Less expensive panels with modest thermal conductivity will be sufficient for most regions.

The panels are attached to 36 multi-section Inconel ribs, which are traced to provide heating for the carbon liner during bakeout and cooling between shots. They also serve as thermal isolation members that maintain alignment of the PFC liner during thermal cycling. Figure 17 illustrates the attachment concept for the panels to the ribs. Bake-out of the PFC panels is provided by circulating helium or helium gas at up to 20 atmospheres through the tracing on the mounting ribs. The tracing also serves to remove the heat deposited in the PFCs during normal operation. In the present design, the plasma-facing surface is located approximately 3.5 cm from the vacuum vessel surface. This distance will be increased locally to provide room for upgrades such as trim coils, diagnostics, or divertor pumping.

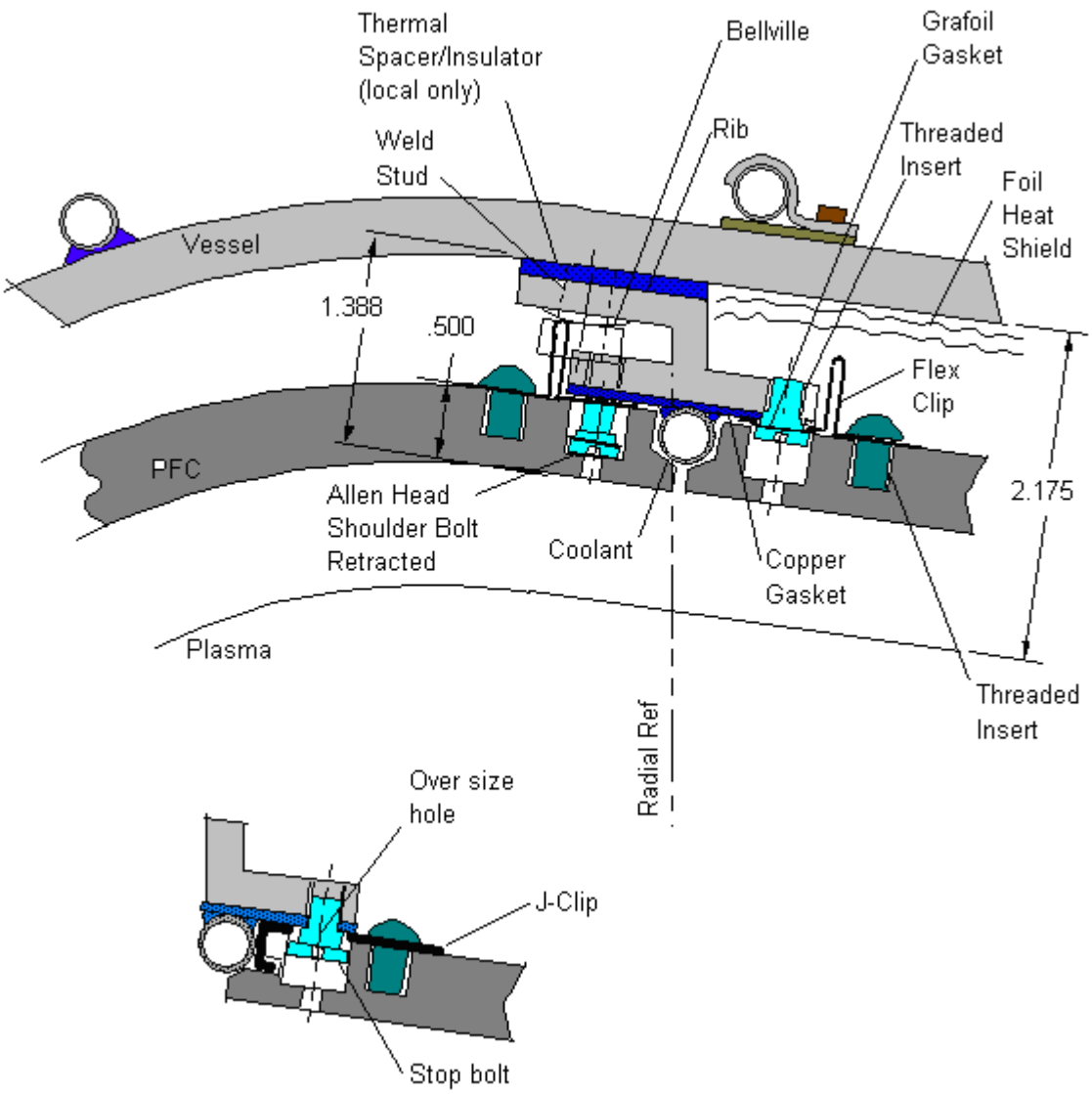

Figure 17 Panel-to-Rib Attachment Concept

4 DESIGN BASIS

The design basis for the vacuum vessel includes geometry optimization, design criteria, analysis, and vendor input from manufacturing studies conducted by multiple industrial vendors as part of the conceptual design process.

The design basis for the PFCs includes previous experience, analysis, and vendor input for the molded CFC panels. Because of the close thermal and mechanical interfaces between the VV and PFCs, they have been analyzed in an integrated fashion, including both the initial ohmic operating phases through all the upgrades to the full complement of plasma heating and full coverage of panels.

Geometry Optimization

The actual geometry of the vessel has been optimized to provide the largest possible envelope that will still allow the modular coils to slide over the vessel sector during field period assembly. Software was developed that provided the maximum "stay-out" zone for a given coil assembly trajectory, then the trajectory was optimized to provide the largest "stay-out" zone. The vessel geometry was then derived to form a smooth shape within the "stay-out" zone. The basic process is illustrated in Figure 18.

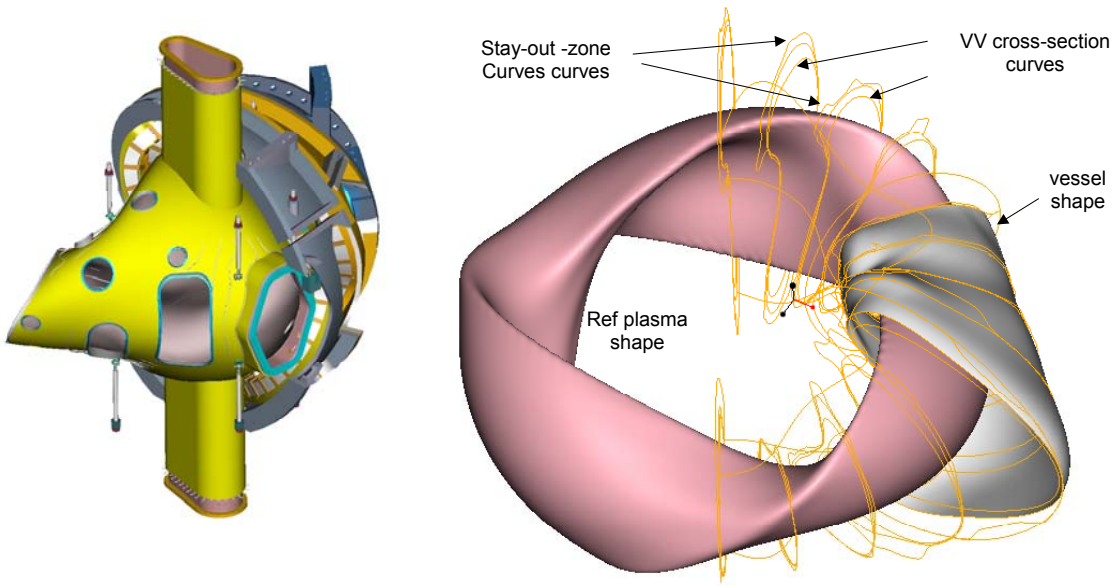

Figure 18 Vacuum vessel geometry optimization process

Design criteria

The vacuum vessel will be designed according to the NCSX Structural Design Criteria, which is based on the ASME Code, Section VIII, Division 2. The code provides a conservative but prudent approach to design stresses, fatigue, buckling, welding, and inspection of vessels. While the vessel will be designed to be in compliance with the ASME Code, the vessel will not be code-stamped.

Plasma facing components will also be designed to ASME code type stress limits, although the material properties for carbon fiber reinforced composites (CFC) are not included in the code. The basic material properties for the vessel and PFC materials are listed in Table 5.

Table 5 Material Properties for the VV and PFCs

Material	Inconel 625 [1]	Carbon Fiber Composite Stackpole 2D 0/90 Material[2]
Yield strength	55 ksi @ 70 F 45.7 ksi @ 750 F	15 ksi (flexural strength)
Ultimate Tensile Strength	110 ksi	8 ksi (in-plane)
Young's modulus	30 E-6 @ 70 F 27 E-6 @ 750 F	4.3 E6 psi
Fatigue strength, 100,000 cycles	73 ksi base material 39 ksi weld material	70% S_{ult}
Poisson's ratio	0.28 - 0.30, temp dependent	0.29 (in-plane)

Stress in vessel from pressure, disruption loads

A linear static stress analysis in support of the NCSX PDR was carried out on the NCSX vacuum vessel[3]. The analysis was performed using a Nastran Finite Element model of a simplified one third (120 0) period shell with ports as shown in Figure 19. The model is based on the vessel configuration (se100) current as of 13 June 2003, and consists of standard quadrilateral and triangular plate elements with isotropic material properties of Inconel 625. The main shell is a 0.375" nominal thickness with various port nozzle thickness varying from 0.125" to 0.500. To simulate a full 360 degree structure, cyclically symmetric boundary conditions were imposed on the edge grid points at -600 and +600. Two vertical support points, straddling and above the large 0-degree access port (port 12) at the positions indicated in Figure 20, provide the minimum vertical constraints required to suppress vertical rigid body motions. Four circumferential constraints were added adjacent to the Central 0-degree port to restrain a rigid body rotation about the Z-axis. To verify structural stability and evaluate unbalanced loading conditions, a buckling analysis and a static unbalanced horizontal loading on a full 360 degree model was also performed[4]. Four basic static loading conditions were investigated, including :

1. Atmosphere external pressure plus gravity.

2. The combined atmospheric pressure, gravity, and eddy current loading from stationary (ohmic) plasma disruptions of 320 kA at 1.7 Tesla.

3. Repeated with 210 kA at 2.0 Tesla (a high beta mode - Coil Set c07r00).

4. Repeated with 320 kA vertical plasma disruption (VDE) using Coil Set c07r00 at1.7T.

---

[1] J. Mayhall, "Inconel properties and failure criteria for the ORNL/TFTR RF Antenna Faraday Shield Analysis", DM-XCS-14690-003, May, 1988

[2] F. Dahlgren "NCSX First Wall FEA Stationary Disruption Analysis", NCSX ENGR. MTG., 13 March 2002

[3] F. Dahlgren "NCSX Vacuum Vessel Stress Analysis", MED-120903-FD, Sep 9, 2003.

[4] F. Dahlgren "NCSX Vacuum Vessel Stress Analysis", MED-182003-FD, Aug 20, 2003.

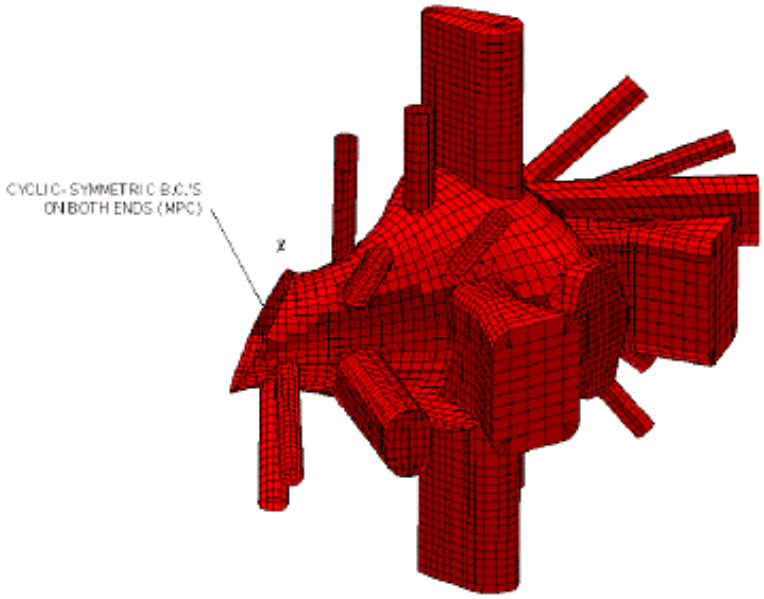

Figure 19 Finite (Nastran/Spark) Model of 120 degree vacuum vessel period

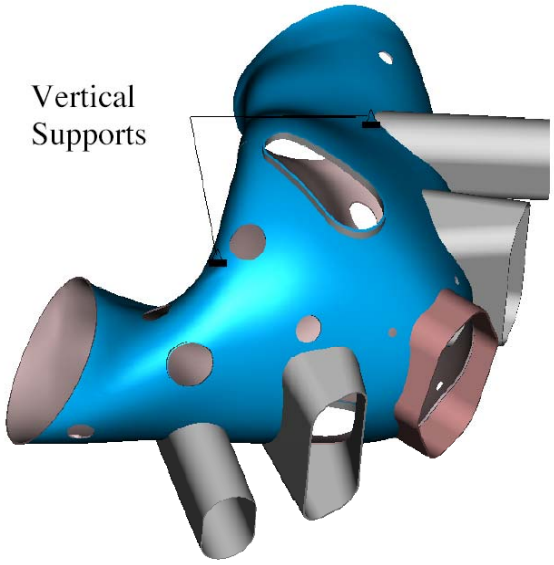

Figure 20 Locations For Vessel Vertical Supports

The disruption loads were derived from an assumed stationary instantaneous plasma disruption (The plasma current was modeled as a single filament) with the eddy currents induced in the vessel driven by a fully coupled inductive solution which ignores any other coupled circuits (ie. the 1st wall shell is not included in deriving the eddy currents or loads). As such it should represent a reasonable upper bound on the gross loading from stationary plasma disruptions.

The vertical disruption load case assumes an instantaneous stationary disruption from a 320 kA plasma displaced vertically up by 10cm. The loads were generated by Spark ver.20b which utilized cyclically-symmetric (MPC) boundaries to simulate the full 360 degree vessel circuit. The grid point force summations for the three disruption loads on the 120 period of the vessel are presented in Table 6. From this table it can be seen that the VDE produces the largest net load of 8,412 lbs (37,418 Newtons) on the external supports.

Table 6 Disruption Load Summary

	Current, kA		Loads from	Forces, Newtons			Moments (Newton-meters)		
Scenario	**Toroidal**	**Poloidal**		**Fx**	**Fy**	**Fz**	**Mx**	**My**	**Mz**
		(per period)		(1st period (-60-60 deg)			(1st period (-60-60 deg)		
2T High Beta	-210	-22.8	Self	16275	-9	159	-1417	-59	29
			Coils	-43630	40	-89	21981	80	65
			Total	-27355	31	70	20564	21	94
320 kA ohmic	-320	-37	Self	38445	-51	367	-3979	-146	41
			Coils	-84950	63	165	15240	119	119
			Total	-46505	12	222	11261	160	160
320 kA VDE*	-320	-37.5	Self	40391	1466	1773	-4567	3594	509
			Coils	-89239	47933	35646	17510	-22875	21265
			Total	-48848	49399	37418	12943	-19281	21774

*(plasma current displaced 12 cm vertically)

While the present analysis represents a reasonable upper bound on the global effects of disruption forces on the vessel, the concentrated loading from the 1st wall and other attached structures could produce localized bending and stress concentrations that will still need to be analyzed as will the dynamic response of the vessel to various dynamic loading conditions. The actual disruption loads were applied as static directional forces on individual grid points. These forces arise from the interaction of eddy currents induced in the vessel wall (generated due to the inductive coupling of the vessel with the plasma circuit loop), and the ambient magnetic fields penetrating the shell from the toroidal and poloidal field coils (plus the self fields from surrounding eddy currents). Since these interactions produce a magnetic pressure, the actual discrete nodal forces applied are these pressures integrated over the effective area associated with each grid point.

Response to normal loading conditions

Table 7 summarizes the results of the basic static analysis. Figure 22 and Figure 23 are contour plots of the displacements for the 1 atmosphere pressure plus gravity loading condition. The maximum displacement of 0.153" is at the bottom of the port 5 in the radial direction, but this is due mainly to a slight inboard rotation of the shell at the shell/nozzle intersection. The peak lateral displacements occur at the center of the tall horizontal ports adjacent to the neutral beam port. These displacements are nearly symmetric since the major portion of the displacement is due to the (symmetric) external atmospheric pressure. The stress distribution for the gravity and pressure loading is shown in Figure 23, and indicates a peak stress of less than 12 ksi at the intersection of the large radial ports and the torus shell.

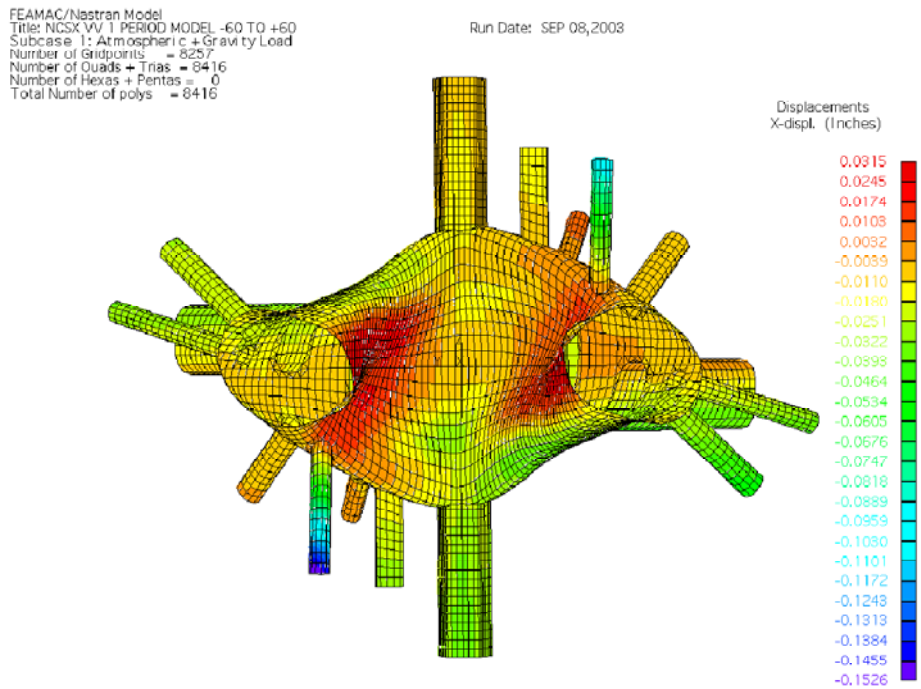

Figure 21 Radial (R) Displacement Contours for atmospheric + gravity loading (SC#1

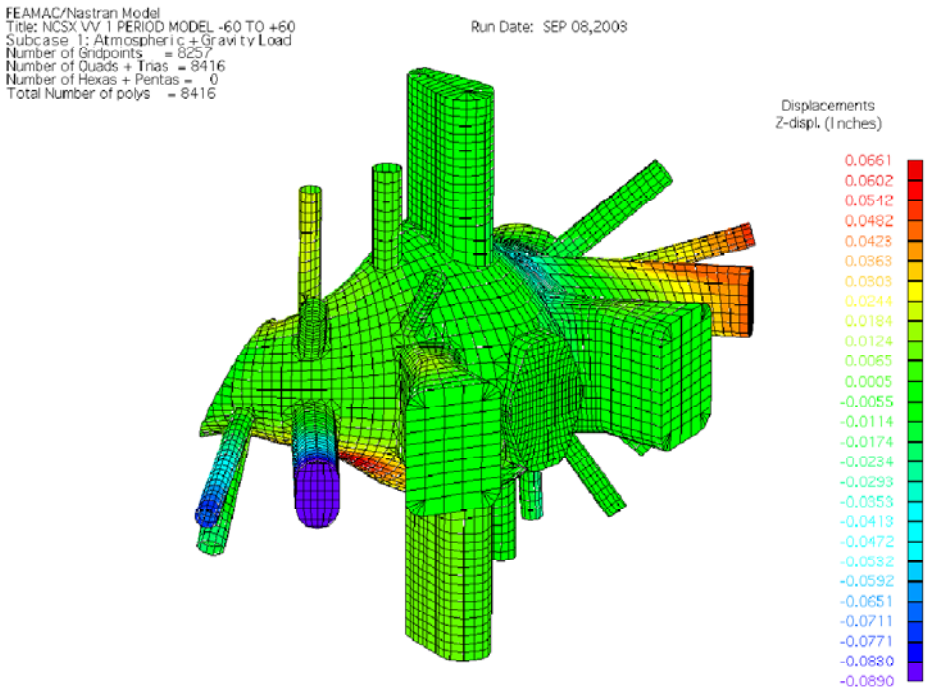

Figure 22 Vertical (Z) Displacement Contours for atmospheric + gravity loading (SC#1)

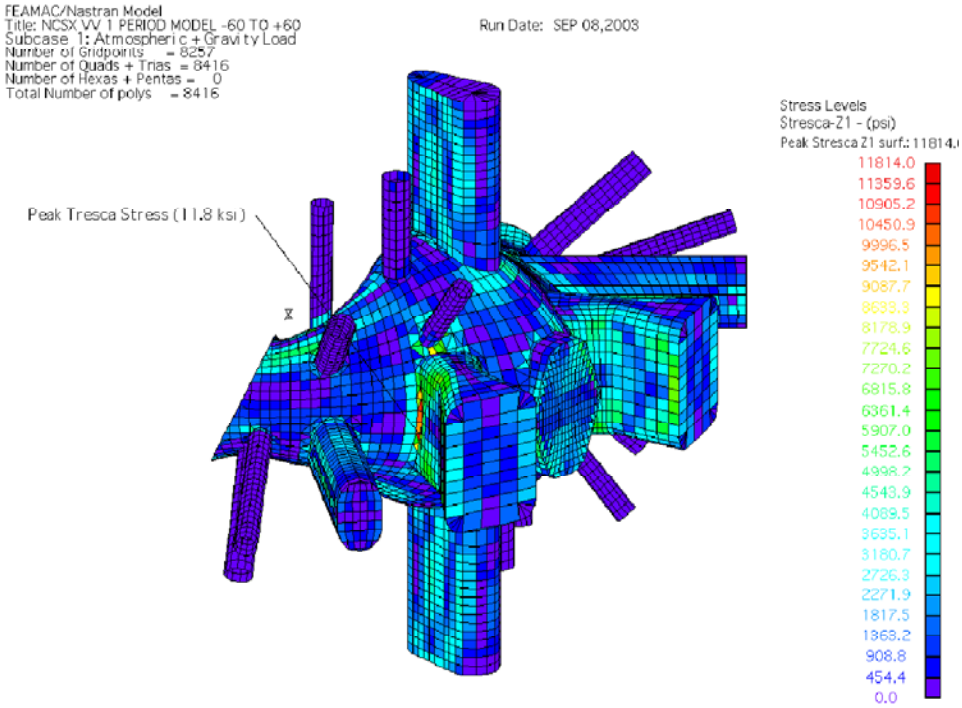

Figure 23 Tresca stress contours for atmospheric + gravity loading (SC#1)

Response to VDE loads

Figure 24 is a plot of the force vectors applied to the model for subcase#3, a stationary disruption of a 320kA plasma which has been displaced 10 cm up from it's nominal position (VDE). Note that opaque model elements are included in this plot and obscure some of the minor loads on the outer shell wall. The peak grid point load is 702 lbs located above the horizontal mid-plane of the vessel As indicated in Table 6, the summation of E-M loads for the VDE is 8,412 lbs (37,418 Newtons) of net upward vertical force on a 120 degree segment of the vessel. By comparison the gravity load for the 120 degree period is roughly 4,800 lbs. Depending on the field polarity and plasma current direction, the E-M loading can be either up or down on the vessel (i.e. adding or subtracting from the gravity load). The maximum displacement is 0.135" in the upward vertical (Z) direction indicated in red in Figure 25.

Figure 26 shows the peak Tresca stress of 15.9 ksi at the intersection port 11 and the shell. The Minor Principle Stress for the downward VDE 24.8ksi is at the intersection of port 10 and shell on the Z2 surface as shown in Figure 27. This is the highest stress in the vessel for any of the basic loading conditions investigated but still provides a comfortable margin compared to the material allowable of about 1.1 without including the additional local reinforcement from doublers and support clevis attachments. The caveat here is that some of the high Principle stress regions are at the port nozzle/shell intersection where the welds and HAZ are (and where there are reduced allowables). This may warrant some further localized modeling and analysis where the detailed weld and doubler can be more accurately represented.

Note the margins indicated above are based on the ratio of allowable stress to peak stress, where the allowable stress is the room temperature allowable of 27.5 ksi as specified by ASME Pressure Vessel Code for 625 Grade-1 Inconel ASTM-B-443.

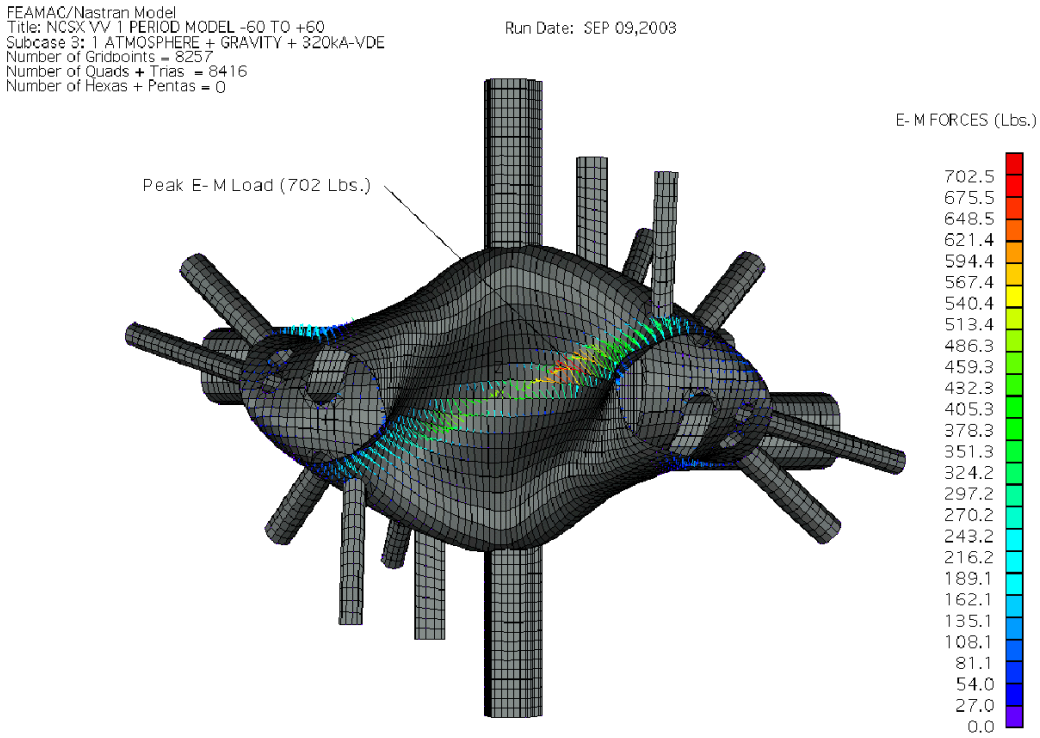

Figure 24 E-M forces on Vessel for 320kA Vertical Plasma Disruption (VDE-SC#3 - looking outboard from machine center – Inductive solution)

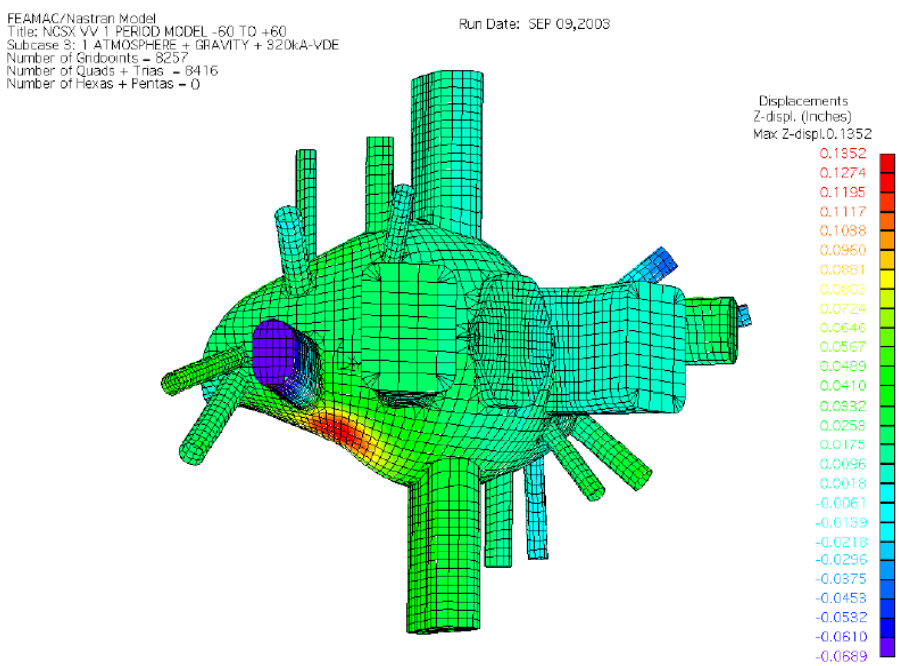

Figure 25 Vertical (Z) Displacement Contours for atmospheric + gravity loading + 320kA

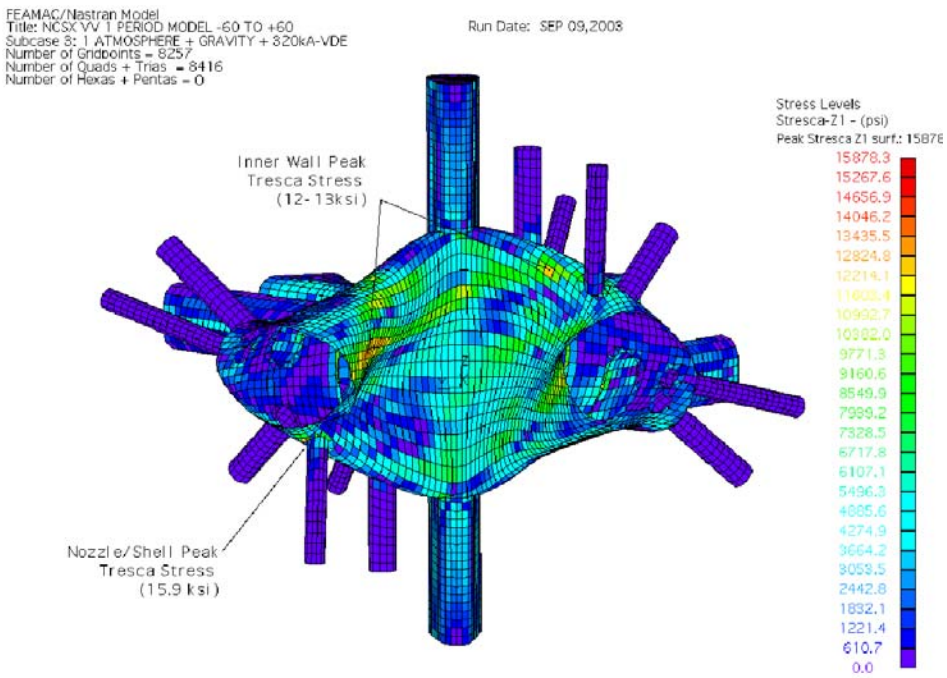

Figure 26 Tresca Stress Contours for atmospheric + gravity loading + 320kA Vertical Disruption (VDE-SC#3), Peak: @Nozzle/Shell intersection

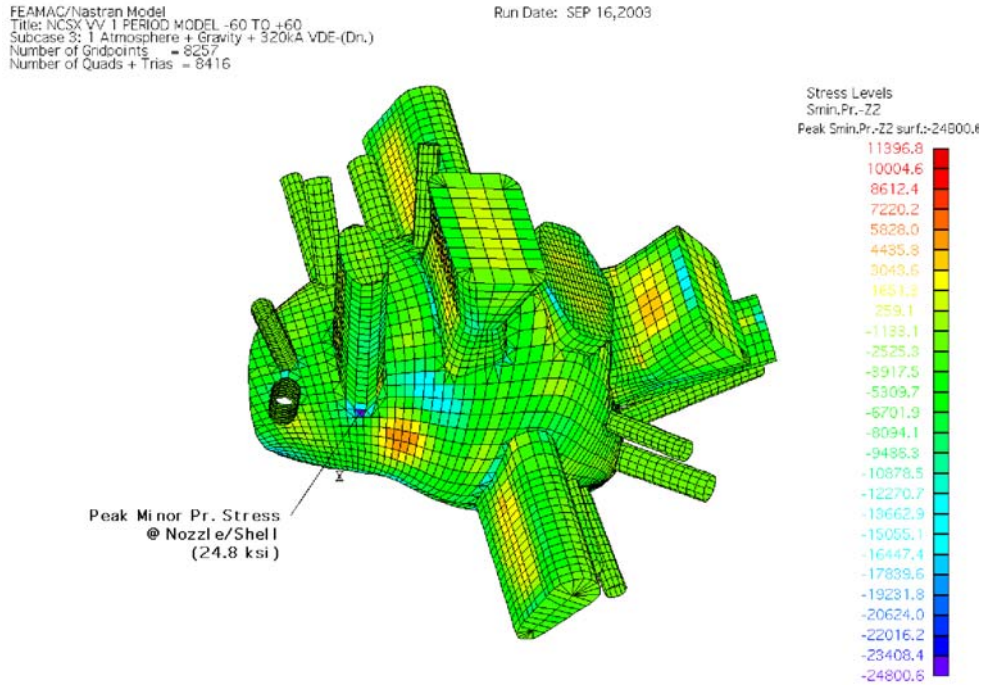

Figure 27 Minor Principle Stress (Z2) Contours for atmospheric + gravity loading+ 320kA Vertical (Dn.) Disruption (VDE-SC#3b), Peak: @Nozzle/Shell intersection

Buckling Analysis

Buckling loads were also a concern for the vessel, and an elastic buckling calculation was performed. The analysis assumed a 0.25 inch shell, to conservatively account for any thinning that may occur during forming operations. The analysis indicated the first eigenvalue for buckling under a uniform pressure load of 1 atmosphere was 6.7. This is equivalent to the factor of safety for buckling on the 1 atmosphere load. The deformed shape is illustrated in Figure 28

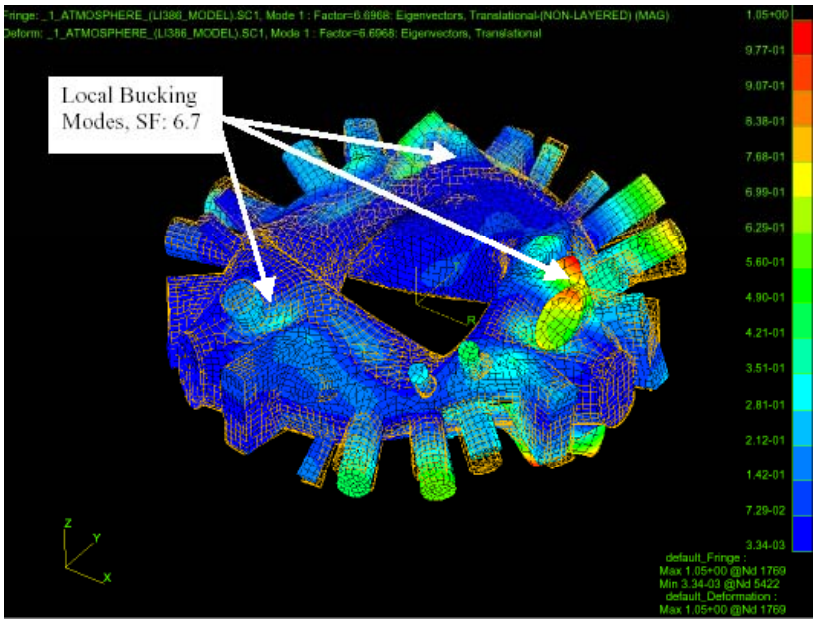

Figure 28 Shape Deformation From Buckling Analysis

Table 7 Stress and Deflection Analysis Summary

	Peak Displacements (Inches)			Peak Stresses (ksi)	
Loading/case# & file	Radial	Toroidal	Vertical	Mjr./Min. Pr.	Tresca
Pressure (1 Bar) + Gravity	0.032	0.062	0.066	12.42 - Z2	11.8
Subcase#1- ncsx-120vv-SC1	-0.153	-0.064	-0.089	-16.33 - Z1[1]	
Press. + Grav. + 320kA-1.7T	0.054	0.064	0.112	16.33 – Z1	12.4
Subcase#2- ncsx-120vv-SC2	-0.153	-0.086	-0.058	-19.05 – Z2[2]	
Press. + Grav. + 320kA – VDE	0.086	0.093	0.135	19.21 – Z2	15.9
Subcase#3- ncsx-120vv-SC3	-0.108	-0.082	-0.069	-21.44 – Z1[3]	
Press. + Grav. + 320kA – VDE	0.112	0.100	0.127	18.45 – Z1	17.1
Subcase#3b- ncsx-120vv-SC3b	-0.211	-0.078	-0.132	-24.80 – Z2[3a]	
Press. + Grav. + 210kA- 2.0T	0.044	0.061	0.088	13.79 – Z1	12.2
Subcase#4- ncsx-120vv-SC4	-0.118	-0.078	-0.064	-18.79 – Z1[4]	

1 Peak MinorPr. Stress @ 0 degrees outer section of vert. port/shell intersection .
2 Peak MinorPr. Stress @ –30 degrees bottom high curvature portion of the shell.
3 Peak MinorPr. Stress @ ±30 degrees near vertical support points
3a. Peak MinorPr Stress @ -30 degree vertical port/shell intersection, 22-23 ksi near vertical supports
4 Peak MinorPr. Stress @ 0 degrees outer section of vert. port/shell intersection .

Stress analysis conclusions

In general this preliminary analysis indicates relatively moderate stresses for the various loading conditions investigated. Safety factors under stress allowables for the 625 Inconel material specified for the vacuum vessel are generally 1.1 or greater and margins on buckling exceed those required in the ASME Pressure vessel code. The highest stresses found were in the intersections of the main shell and the vessel support points and the intersection of port 11 and the shell for the VDE (SC3b) loading condition. Since the majority of high stress regions are at the port/shell intersections further local modeling is warranted. ASME allowables are based on the lesser of 1/3 minimum ultimate strength or 2/3 minimum yield strength.

Vessel Vessel and Plasma Facing Component Thermal Analysis

The vacuum vessel temperature is controlled by passing pressurized helium gas through trace lines covering the external surfaces of the shell and ports. Several operating cases must be considered, including bakeout of the vessel without first wall panels, bakeout with the first wall panels, normal operation without first wall panels, and normal operation with first wall panels. The vessel must be heated for bakeout without the first wall panels, and cooled during bakeout of the first wall panels. Conversely, the vessel must be cooled to maintain its temperature during normal operation without the first wall panels, and must be heated to maintain its temperature during normal operation with the panels present. These various thermal loading cases are summarized in Table 8. The required repetition rate for all modes of operation is 15 minutes between pulses.

A series of analyses were performed to verify the thermal performance of the NCSX vessel and PFCs, specifically, to establish the design basis for cooling and heating requirements and coolant supply header design.

- Calculations were performed to determine the heat losses from the vessel as a function of insulation thickness.
- Vessel temperature and cool-down times were determined, based on the operation rep rates, vessel thickness, coolant flow rates, and coolant line spacing.
- Coolant parameters were determined for vessel bakeout and operation. These included pressure drops, flow rates, and temperature change, based on the tracing diameter, length, and number of passages.

Initial operation with limited PFC coverage of vessel

During early operation, and early stages of PFC implementation, portions of the vacuum vessel surface area may not be protected by CFC panels. Figure 29 shows the temperature of the vessel as a function of repetition rate, assuming 6 MW of heating was used. The analysis assumes helium gas at 10 atmospheres pressure, a passage ID of 0.77 cm, and an inlet velocity of 31 m/s. A 40 C coolant temperature was assumed. The pre-shot temperature ratcheted up less than 9 C above the coolant temperature and stabilized after only 7 pulses.

Table 8 VV and PFC Operational Parameters

Operating state:	PFCs - surface min (C)	PFCs - surface max (C)	PFC - ribs min (C)	PFC - ribs max (C)	Vessel min (C)	Vessel max (C)	VV extensions min (C)	VV extensions max (C)	Mod Coils/shell min (K)	Mod Coils/shell max (K)
Standby	20	100	20	100	20	100	20	100	77	85
Pre-operating	20	100	20	100	20	100	20	100	77	85
Equilibrated operation		< 1200	20	100	20	100	20	100	77	85
Bakeout	150	350	150	350	150	150	150	150	77	100

Typical operating modes for analysis:

		PFCs - surface		PFC - ribs		Vessel	VV extensions	Mod Coils/shell
Typical standby:	case 1		100		100	20	20	77
Pre-op / conditioning:	case 2		100		100	100	100	77
Operation:								
- no PFCs, 3 MW, .3 s	case 3a		n/a		n/a	20	20	77
- no PFCs, 6 MW, .3 s	case 3b		n/a		n/a	100	100	77
- 12 MW, 1.2s, partial PFCs	case 3c	n/a +	< 1200	n/a +	< 350	TBD	TBD	77
- 12 MW, 1.2s with PFCs	case 3d		< 1200		< 350	100	100	77
Bakeout:	case 4		350		350	150	150	100

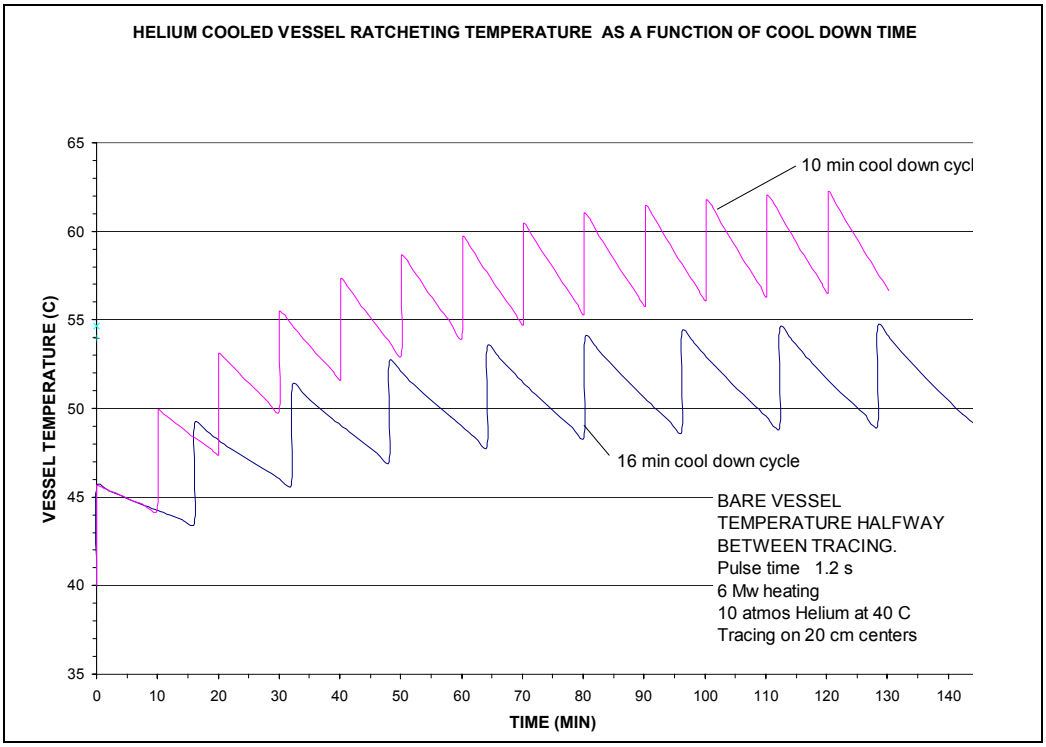

Figure 29 Thermal Ratcheting of VV Temperature

In this configuration there is little effect on cool down time using other cooling media or varying the coolant parameters. This is because the spacing of the tubing and the diffusivity of the material in this geometry, rather than the heat transfer coefficient, limit the time constant. If the material was more conductive or if the spacing decreased dramatically, then the opposite would become true.

Vessel Tracing Thermo-Hydraulic Analysis

The vessel is assumed to have a minimum of 2.5 cm of thermal insulation on its external surface, 5 cm around all the ports, with 15 cm average fill between the shell and vessel wall to thermally isolate the modular coils. Using an efficiency allowance of 75% results in a loss of 18 kW from the liner to the cryostat (100K) during bakeout at 150 C.

A tradeoff study indicates that 25 kW, 39% more than the calculated minimum, may be supplied through the liner tracing using the following parameters:

- Helium at 10 atmospheres and inlet temperature of 180 C.
- 3/8 inch OD, 0.31 inch ID tubing (0.77 cm ID)
- Helium inlet velocity 31 m/s
- Total maximum mass flow to liner 630 kg/hr (285 cfm)
- 96 parallel tracing circuits (32 per period)
- Tracing length per circuit is assumed to be 5.5.m

The resulting pressure drop is only 0.13 atmospheres, so the length of tracing circuits will not be a concern. However, every effort will be made to keep the runs approximately equal in length. Analysis for 10 minute cool down times between shots indicate that the heating lines have twice the cooling capacity required. As noted earlier, this does not significantly reduce the final temperature, as the liner is conduction limited.

Vessel Heat Balance

Table 9 and Figure 30 show the results of a study which quantifies the thermal relationships between the Vessel, Vessel Cooling System, PFCs, Modular Coils, Cryogenic System, and Cryostat under different non-operating modes and the effects of various insulation thicknesses on the thermal heat losses. In all cases the Cryostat is assumed to be cooled down to 80 K. The PFC case assumes the upgrade condition with full coverage by graphite panels, 350 C bakeout, and the vessel at 150 C.

Among the conclusions were the following:

- A maximum of insulation should be used, i.e. 2.5 cm of vessel insulation, 5 cm on port extensions, and 20 cm minimum on the cryostat walls.
- The spaces between the shell and MC must be insulated.
- Exterior heating on the cryostat exterior wall is needed for to prevent frost buildup. The requirement is modest, less than 3 kW, and may be provided by fans blowing room air across the structure or by small resistance heaters attached to the exterior
- A minimum of 30 kW of heating is required to bring the PFCs to 350 C.
- The Cryostat benefits the Vessel during PFC bakeout, serving to significantly reduce its coolant load.

Thermal load on vessel from full PFC system during bakeout

Baking the PFCs to 350 C, while maintaining the vessel at 150 C results in high heat loads to the vessel coolant system unless radiation heat shields are used. Table 10 shows the dependence of the heat loss to the vessel on the number of shields. Since the vessel tracing is designed for 25 kW, it should be able to handle the heat load with no changes, provided that three heat shields are utilized under the PFC tiles. With the cryostat in operation during the bakeout, the net load into the vessel coolant is only 12 kW, the remainder being taken by the cryo system.

Table 9 Insulation thicknesses assumed in study

	Vessel Bake 150 C			Vessel at Idle 293 K			PFC Bake 350 C		
Vessel microtherm thickness (cm)	1.27	2	**2.5**	1.3	2.0	**2.5**	1.3	2.0	**2.5**
Cryo foam thickness(cm)	20	20	**20**	20	20	**20**	20	20	**20**
Backfill insul. effec. thick.(cm)	15	15	**15**	15	15	**15**	15	15	**15**
Port insul. Thickness (cm)	2.54	5.08	**5.1**	2.5	5.1	**5.1**	2.5	5.1	**5.1**
Port cover (cm)	1.27	2	**2.5**	1.3	2.0	**2.5**	1.3	2.0	**2.5**
Vessel to Cryostat Qt (kW)	0.3	0.3	**0.3**	0.2	0.2	**0.2**	0.3	0.3	**0.3**
Cryostat inleak Qv (kW)	3.7	3.7	**3.7**	3.7	3.7	**3.7**	3.7	3.7	**3.7**
Vessel to Coil front Qc (kW)	12.1	7.7	**6.1**	7.5	4.8	**3.8**	12.1	7.7	**6.1**
Vessel Port Cover to ambient Qa (kW)	2.1	1.4	**1.1**	0.0	0.0	**0.0**	2.1	1.4	**1.1**
Vessel to coil sides Qci (kW)	2.5	2.5	**2.5**	1.6	1.6	**1.6**	2.5	2.5	**2.5**
Port to Cryostat Qp (k	16.8	8.4	**8.4**	10.5	5.2	**5.2**	16.8	8.4	**8.4**
PFC to Vessel Qg (kW)	0.0	30.0	**30.0**	0.0	0.0	**0.0**	0.0	0.0	**0.00**
Vessel Coolant Load Qn (kW)	-34.0	9.7	**11.6**	-19.8	-11.8	**-10.8**	-34.0	-20.3	**-18.4**
***Exterior heat flux (w/cm^2-C)**	4.64E-04	4.64E-04	**4.64E-04**	4.64E-04	4.64E-04	**4.64E-04**	4.64E-04	4.64E-04	**4.64E-04**
LN2 consumption (l/hr)	850	542	**499**	530	350	**327**	850	542	**499**
Auxillary exterior heating (kW)	2.8	2.8	**2.8**	2.8	2.8	**2.8**	2.8	2.8	**2.8**
Coil coolant load (kW)	14.7	10.3	**8.6**	9.1	6.4	**5.3**	14.7	10.3	**8.6**
Total Cryo system load (kW)	37.7	24.1	**22.1**	23.5	15.5	**14.5**	37.7	24.1	**22.1**

Negative implies heat addition.

* Corresponds to laminar flow

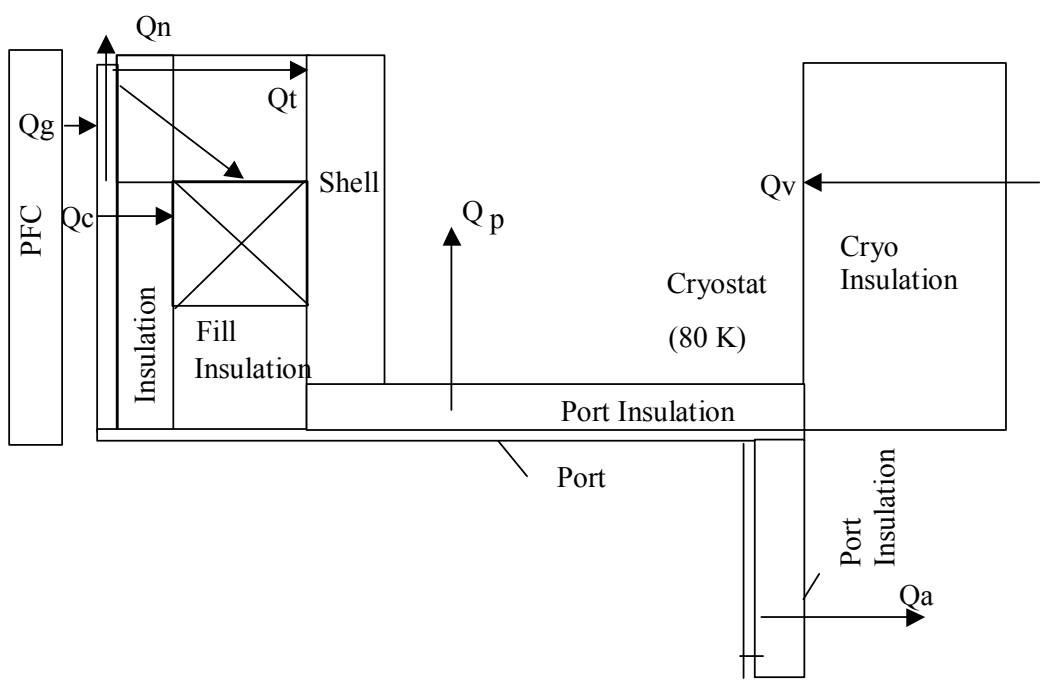

Figure 30 Schematic of NCSX Core Component Thermal Balance

Table 10 Heat Loss to VV From PFCs

Number of shields	Heat loss (kW)
0	200
1	49
2	35
3	30

PFC Panel Bakeout

The thermal response, assuming an input of 30 kW, 398 C helium gas, and three heat shields is shown in Figure 31. These results indicate that the PFC tiles reach the required temperature of 350 C in a little over 6 hours, and that this is the maximum attainable. This includes a 75% efficiency factor as a contingency, however, so it is expected that there will be adequate margin. If 350 C bakeout proves difficult, it is possible to augment the gas heating with electrical resistance strip heaters wrapped around some of the larger ports. Adding significant additional insulation is not a practical solution since most of the available space has already been utilized, i.e. the fit between the vessel, ports, shell, and modular coils limits insulation.

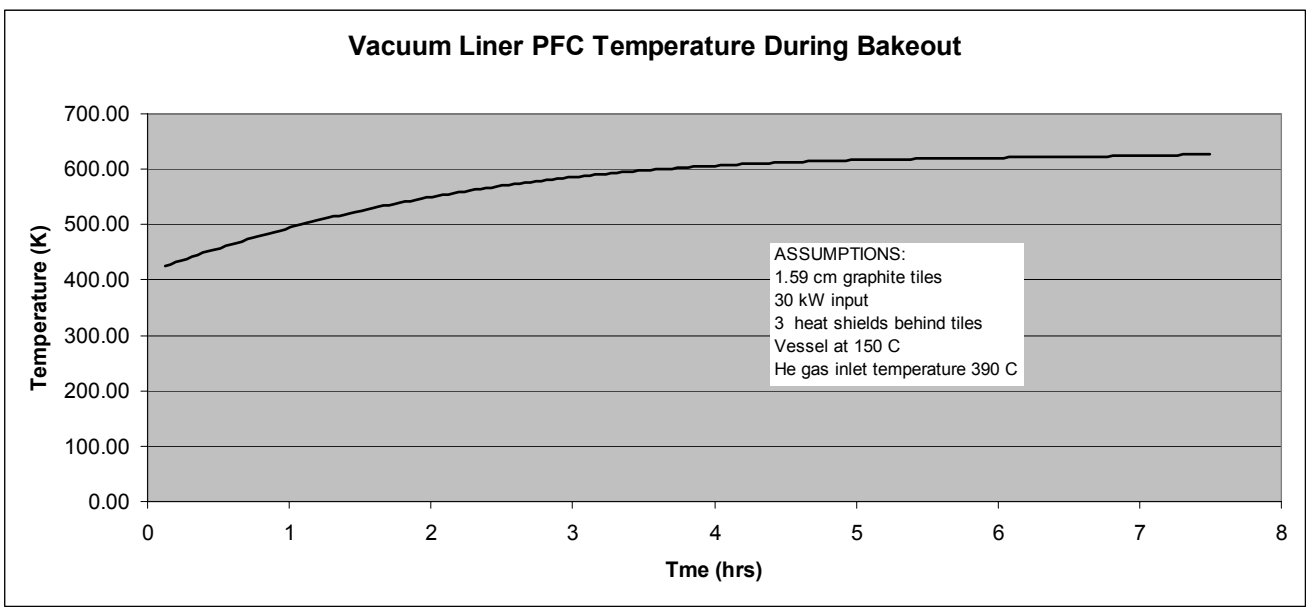

Figure 31 Time to temperature during bakeout for PFCs

PFC panel cooling

Since heat shielding is required to limit the vessel thermal loading during 350 C bakeout operation, the PFCs do not have a radiation cooling path to the vessel and must be cooled by conduction to another heat sink. This resulted in the rib design that is thermally isolated from the vessel but is traced to remove PFC heat. This is shown schematically in Figure 32, the thermal model used for 1-D analysis of the heat response. . It assumes that there is a helium cooled tracing mounted onto the liner mounting rib. The rib is thermally isolated to best of effort to assure that the thermal load is managed by the rib coolant circuit, not the vacuum vessel. This is accomplished by minimizing the contact area, using thin sections, and shoulder bolts to prevent clamp up of surfaces. The later also permits thermal growth during heating cycles.

The resulting heat transfer is shown in Figure 33. Thermal ratcheting is minimized, with the vessel leveling off at about 20 C above its initial temperature.

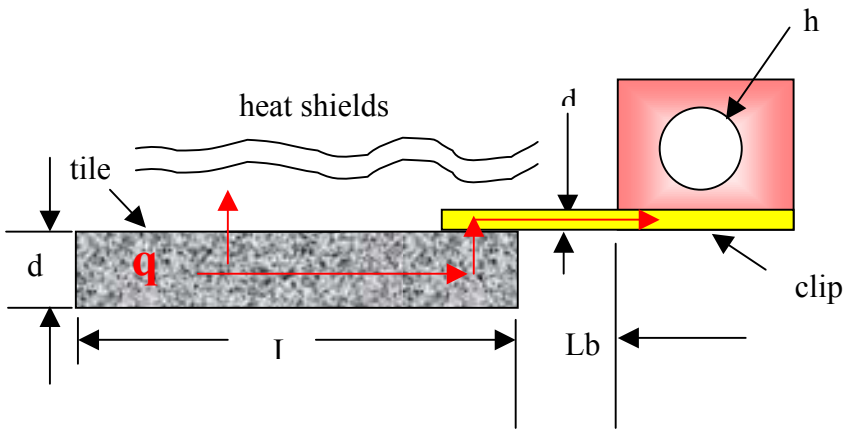

Figure 32 Panel Mounting Schematic

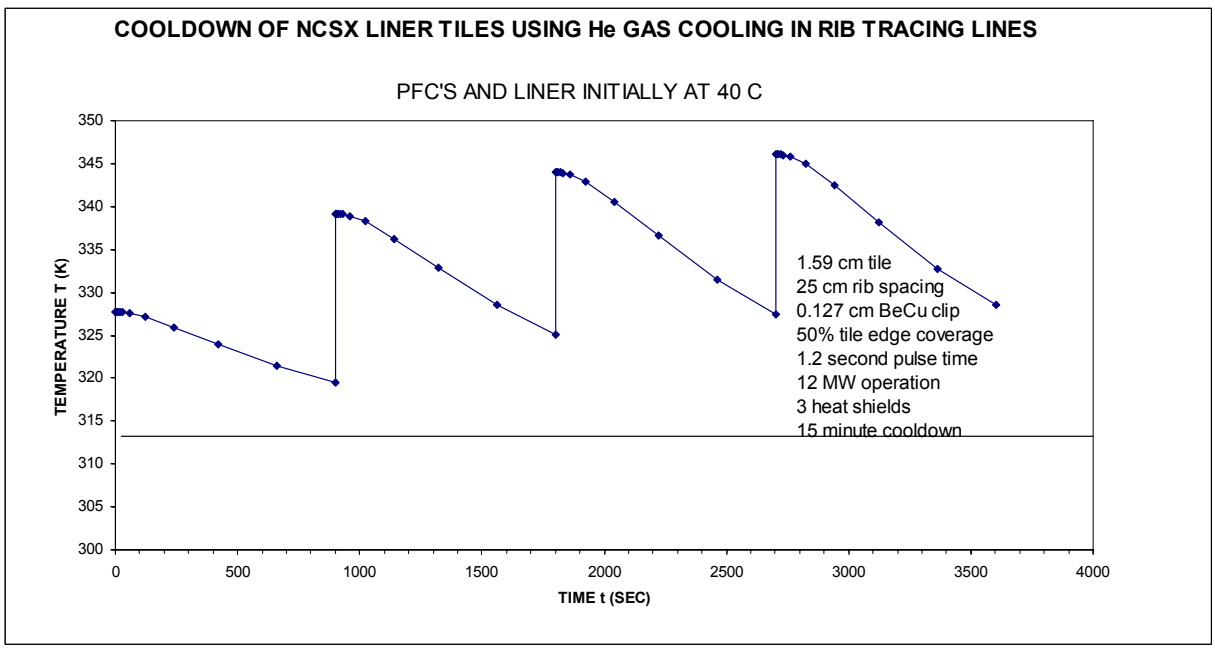

Figure 33 Thermal Response of Shielded Tiles

Limiter and NB Tile Geometry

The graphite liner panels can potentially be the same design for all the PFC components used in the vessel; provided the maximum temperatures predicted during one plus seconds of operation do not exceed the 1200 C maximum usually permitted. Limiters could operate up into the 1500 W/cm^2 range. By using graphite gaskets or omitting them and varying the number of heat shields between the liner and the vessel, it is possible to customize thermal performance, that is, permit tiles to float up in temperature and utilize radiative cooling or on the other hand tightly

couple them to the ribs and use conductive cooling to the tracing. Figure 34 illustrates permissible heat flux as a function of pulse length.

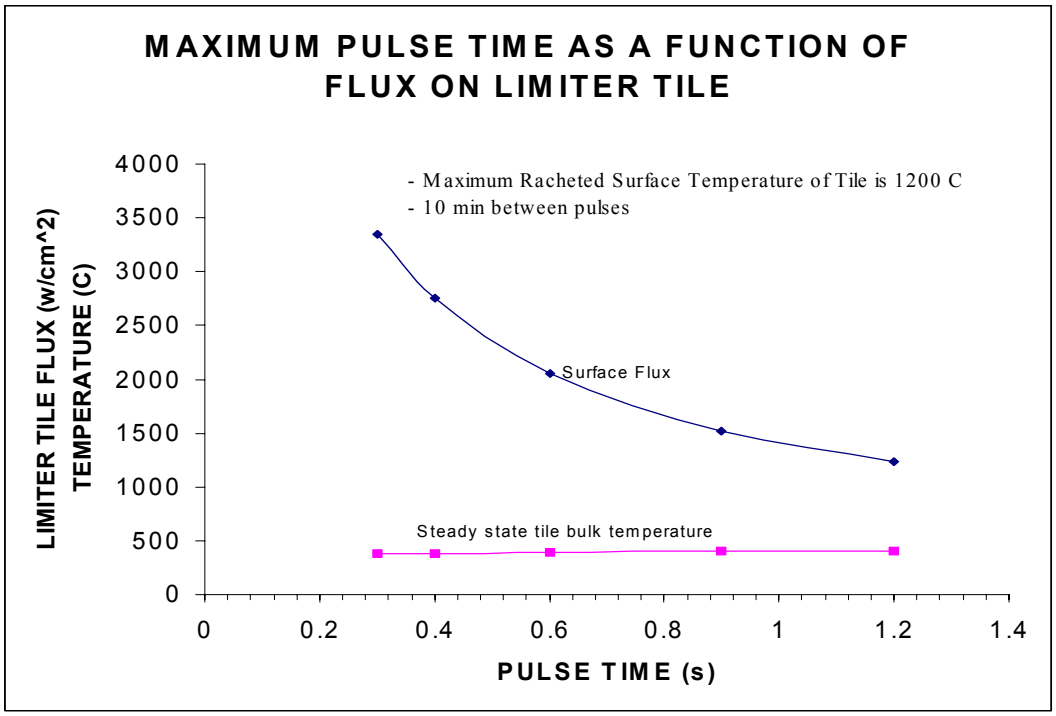

Figure 34 Maximum Heat Flux v. Heating Pulse Length

PFC Support Rib Thermo-Hydraulics

The PFC support ribs must be assembled into the vessel in two pieces in order to fit through the large access ports. There also needs to be a tracing on both sides of the ribs to permit close coupling to each of the two panels mounting to the ribs. The ribs are installed on approximately 10 degree radial centers. A helium supply system similar to the vessel tracing system will be used, but it will be operated at the elevated temperature. There is one gas header to each period, entering the bottom vertical port and exiting the top vertical port. The heating system parameters for 350 C bakeout are provided in Table 11.

Table 11 PFC Thermo-Hydraulic Parameters

Total heat required	30 kW
Number of tracing circuits	78
Average length of circuit	5 m
ID of tracing	0.77 cm
Helium inlet velocity	31 m/s
Helium inlet temperature	390 C
Helium supply	20 atmospheres
Supply header OD	5 cm
Total helium flow	600 kg/hr (230 cfm)
Pressure drop	0.24 atmospheres

Plasma Facing Component Structural Analysis

The initial plasma facing components will consist only of the fixed poloidal limiters at the 3 vacuum vessel assembly joints, and these have no structural implications. However, the upgrade system that must be accommodated consists of a full, stand alone shell structure consisting of ribs and CFC panels that could be loaded by plasma disruptions. A SPARK analysis was performed on a CFC shell to obtain the loading conditions[5]. The calculation did not consider the presence of the vacuum vessel and is conservative from that standpoint. The same plasma disruption cases were considered for the first wall as were considered for the vessel, namely a 175 kA, 2T scenario and a 350 kA, 1.8 T scenario. Table 12 summarizes the net forces on the first wall from these two cases.

Table 12 Net Forces on One Liner Field Period

Disruption scenario	Force on single field period, -60 to +6-0 degrees, x direction, (lbs)	
175 kA, 2T	Self force	3.033
	Force from coils	-9,285
	Net force	-6,252
350 kA, 1.8T	Self force	12,635
	Force from coils	-13,858
	Net force	-1,223

The structural response of the first wall from these forces was calculated using ANSYS, and the stress distribution is illustrated in Figure 35. The general stresses are relatively low, below the 3000 psi allowable for the material. The peak stresses are slightly high around the ports, but the analysis does not include any reinforcement due to the rib structure or molded reinforcements that could be included around discontinuities such as the port openings. Table 13 summarizes the stresses and deflections for the two loading conditions. As with the vessel analysis, it should be noted that an instantaneous plasma disruption was assumed and the loading is conservative.

[5] A. Brooks, "Vacuum Vessel and First Wall Disruption Analyses", February 2002

Figure 35 Tresca Stresses From 350kA Disruption

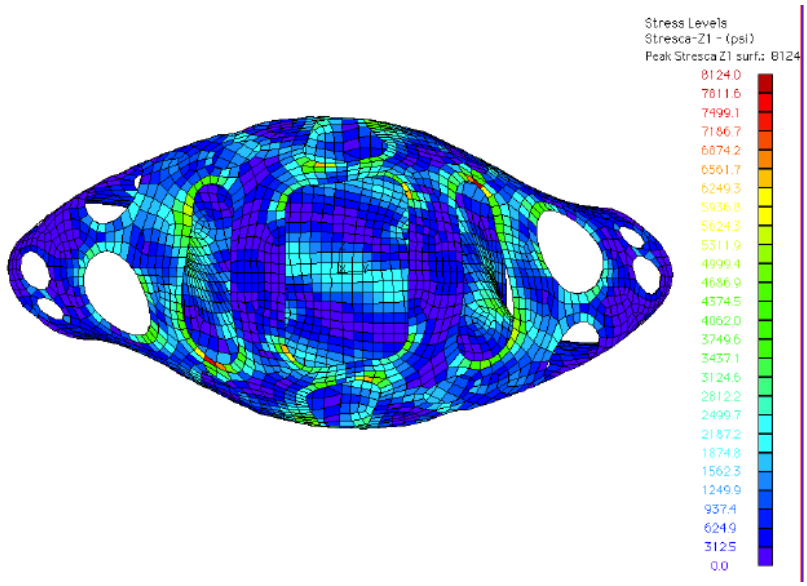

Table 13 Summary of Stresses in Disruption Analysis of Liner

	175 kA disruption	350 kA disruption
Max force	829 lbs	1819 lbs
Max displacement	0.08 inches	0.24 inches
(E = 2E+6 psi)		
Max stress	5096 psi (MinPr- Z1)	8124 psi (Tresca -Z1)

<u>Vacuum Vessel and PFC Vendor Input, Manufacturing studies, and in-house R&D</u>

In order to obtain feedback during conceptual design from potential fabricators concerning the feasibility, methods, and cost for fabricating the vacuum vessel, funded manufacturing studies of the NCSX vessel were performed by five capable suppliers. The studies were based on a set of CAD models and a draft procurement specification. The vendors proposed several methods for forming the vessel, including hot pressing, cold pressing, explosive forming, and casting. Several suggestions were made concerning details such as port reinforcement design, spacer design, assembly flange design, etc. All the vendors recommended some R&D, but all concluded that the vessel shape, tolerances, and other requirements were feasible. Input was obtained from a potential vendor concerning the large PFC panels, which are not part of the baseline project but will be required as an upgrade during later phases of operation. The approximate size limitations and processing data were discussed. The panels are feasible using commercial pressing and infiltration processes.

A critical feature of the vacuum vessel design is the welded assembly joint between the three vessel field period segments. As described in section 2, a spacer segment will be provided between sectors to provide adjustment for proper fitup. However, the ability to make the 6 high vacuum, poloidal field welds successfully from inside the

vessel with minimal distortion and no damage to the modular coils must be checked with R&D. The present plan is to mock up the field joint using thee the two full scale partial prototype sectors that are presently being fabricated by two separate vendors. Prototypical weld joint flanges will be welded to these sectors and machined for proper fit. The sectors will be welded from inside and the temperature and distortion measurements will be recorded. If further refinement to the joint is still necessary, the sectors can be cut and re-welded.

5 DESIGN IMPLEMENTATION

Component Procurement and Fabrication

The vacuum vessel will be procured via a fixed price subcontract, including the supply of all required labor and materials, machining, fabrication, and factory acceptance inspections and tests. The vessel will be delivered to the Princeton Plasma Physics Laboratory (PPPL) site as three complete field period subassemblies with separate (unattached) port extension assemblies. All of the labor for the final installation and assembly of the vessel will be supplied by PPPL.

In order to qualify vendors prior to contracting for the final vessel, two separate R&D contracts were awarded to establish the feasibility of proposed fabrication processes and to guide the design team toward the optimum design for the selected process. The process under consideration is press forming. The feasibility of the press forming and welding is not an issue, but some R&D is suggested to establish forming parameters for the Inconel in the 0.375 inch thickness, and for verifying the number of panels needed for a complete half period of the vessel. In addition, the welding of a port extension into the vessel torus from inside the vessel must be demonstrated to verify the welding equipment requirements, identify fixturing, and finalize the design details for the joint.

To date, the vendors have provided more detailed manufacturing plans and cost estimates, and are just starting to fabricate a partial, full scale prototype of a section of the vessel. The prototype is shown in Figure 36. The intent of the prototype is to demonstrate all the critical processes, including forming, welding, geometric inspection, and leak checking in a single article. The two prototype sectors, one from each vendor, will also be used at PPPL to validate the field joint assembly weld between 120 degree vessel segments during final assembly.

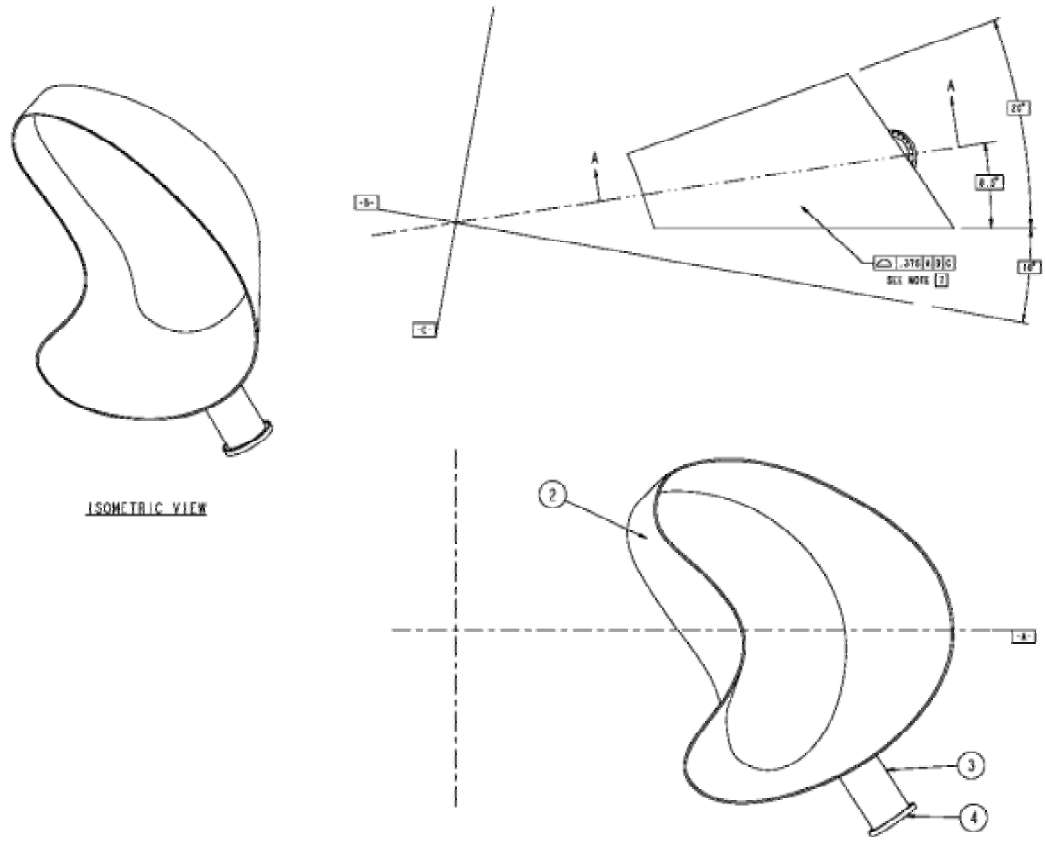

Figure 36 Prototype Vacuum Vessel Segment (PVVS)

Subsystem Assembly, Installation, and Testing

The vacuum vessel will be provided in three identical sections, corresponding to field periods of the magnetic configuration. A set of six modular coils will be assembled over one field period of the vessel. The vessel port extensions will then be welded in place. The trace lines will be connected to the headers at the top and bottom of the large central port extensions. After these connections are leak checked, the thermal insulation will be applied all the port extensions. At this point the vessel will be baked to 180C and leak checked and any repairs made to the port extension welds.

6 RELIABILITY, MAINTAINABILITY, AND SAFETY

The reliability of the vacuum vessel is critical to the operation of NCSX. Once the vessel is installed, there is essentially no access to the outer surfaces for inspection or maintenance, and limited access to the interior surfaces of the vessel. To ensure adequate margin against failures, the vessel will be designed in accordance with the rules of the ASME Boiler and Pressure Vessel Code, Section VIII, Division II and fabricated in strict conformance with an approved manufacturing, inspection and test plan. Numerous quality checks will be performed during subsequent assembly and installation operations. A formal Failure Modes and Effects Criticality Analysis (FMECA) will be performed during the preliminary design phase of the project.

7 COST AND SCHEDULE

The WBS listing for the vacuum vessel is summarized in Table 14 and the cost estimate is summarized in Table 15. This estimate was developed as a bottoms-up estimate, and includes significant input from manufacturers who participated in the manufacturing studies and from the vendors participating in the prototype R&D effort. The vacuum vessel is estimated to cost $5578K. The cost of the PFCs, are not included in the Fabrication Project. The contingency recommended for the vacuum vessel is 39%, due to the developmental nature of the system.

Table 14 WBS listing for vacuum vessel and PFCs

WBS	Description
	Stellarator Core Systems
11	***In-Vessel Components***
111	Limiters
112	Internal Liner
113	Internal Trim Coils
12	***Vacuum Vessel Systems***
121	Assembly
122	Thermal Insulation
123	Heating and Cooling Distribution System
124	Supports
125	Local I&C

Table 15 VV Cost Summary ($k, without contingency)

Total Estimated Cost ($k) excluding contingency

Sum of cost		WBS						
Cost Category	Expense class	**111**	**121**	**122**	**123**	**124**	**125**	**Grand Total**
1) R&D	Labor/Other		$238					$238
	M&S		$921					$921
1) R&D Total			$1,159					$1,159
2) Title I & II	Labor/Other	$8	$621	$65	$45	$43	$22	$803
2) Title I & II Total		$8	$621	$65	$45	$43	$22	$803
3) Fabrication/Assembly (incl title III)	Labor/Other		$231	$25	$23	$9	$3	$291
	M&S		$3,098	$106	$88	$31	$3	$3,326
3) Fabrication/Assembly (incl title III) Total			$3,329	$131	$110	$41	$6	$3,617
Grand Total		**$8**	**$5,108**	**$196**	**$155**	**$83**	**$28**	**$5,578**

The schedule for implementing the Vacuum Vessel and PFCs may be seen in the **Project Master Schedule**, provided as part of the Preliminary Design Report**.** The vacuum vessel is close to the critical path. Title I design

will start at the beginning of FY03. Title II design is scheduled to be finished before the end of FY04. Manufacturing R&D will be conducted in parallel with Title I and Title II design. The production contract will be awarded in July FY04. The first vacuum vessel segment will be shipped to PPPL in early FY05; the second in late FY05; and the third in early FY06. No further work is planned for the PFCs as part of the NCSX project. The spending forecast spread over time is summarized in Table 16

Table 16 Vacuum Vessel and PFC cost summary by year of expenditure (WBS Level 2)

WBS Level 2	FY03 ($k)	FY04 ($k)	FY05 ($k)	FY06 ($k)	FY07 ($k)	TOTAL ($k)
11 - In-Vessel Components	$8					$8
12 - Vacuum Vessel Systems	$1,328	$1,482	$2,603	$154	$4	$5,570
subtotal	$1,335	$1,482	$2,603	$154	$4	$5,578

8 RISK MANAGEMENT

PFCs

The primary technical risks associated with the PFC system are 1) damage to the first wall or vessel from excessive heat flux and 2) excessive impurity influx to the plasma. These problems may arise due to lack of proper materials in the high heat flux regions and/or insufficient wall conditioning or bakeout temperatures to remove wall impurities. In stellarators, it is difficult to predict with certainty where the high heat flux regions will be, and these regions will move with different magnetic configurations. To mitigate these concerns, the PFC system has been designed to allow coverage of the entire interior surface of the vessel with CFC armor. Graphite and CFC tiles have been used successfully on most of the fusion experiments worldwide, and can tolerate extreme heat flux and thermal shock without failure. However, these materials must be baked at temperatures in excess of 300C. For that reason, the NCSX, the PFC system is supported from a rib structure inside the vacuum vessel that can be heated to 350C while the vessel is maintained at 150C. This is the approach used successfully on NSTX. It provides the high temperature necessary to condition the PFCs while maintaining the vessel at 150C to minimize engineering problems of the vessel, viewing windows, and diagnostics.

Vacuum vessel

The vacuum vessel has potential technical, cost and schedule risks. The technical risks can be listed, as well as the way in which each has been addressed:

Potential Technical Risk #1. The vessel will not permit a high quality vacuum (leaks, outgassing, etc.)

The first potential risk, that the vessel will not permit a high quality vacuum, is addressed in the design, the procurement specification, and the manufacturing, inspection, and test plan. The vessel will have the minimum number of welds consistent with the fabrication technique. The welds will be full penetration with a GTAW root pass and GTAW or GMAW filler passes, with no SMAW welding permitted. The vessel will be leak checked at the fabricator after multiple heating and cooling cycles. The interior surfaces will be polished and cleaned according to accepted vacuum equipment standards. The main assembly flanges between field periods will have double seals, with differential pumping between the seals, as will the large, irregular shaped ports. All the circular ports will have conflat seals. In addition to leak checking at the manufacturer, leak checking will occur after the port extensions are welded in place and prior to assembly of the three field periods.

Potential Technical Risk #2. The vessel will not have the correct shape

The second potential risk, that the vessel will not have the correct shape, is mitigated by the 3-D CAD technology and the use of modern 3-D measurement equipment such as laser trackers and portable coordinate measurement systems. The vessel can be continuously measured and corrections made during the fabrication process, and intermediate heat treatment will be provided to reduce residual stresses that could cause distortion during operation. All the fabrication processes will be demonstrated and optimized during the R&D phase of the vessel procurement,

where full scale, partial prototypes will be fabricated and measured. A spacer is included between each field period subassembly that will be used to accommodate any misalignment between field period assembly flanges.

Potential Technical Risk #3. The coils will not fit over the vessel

The third potential risk, that the vessel will not fit inside the modular coils, is also mitigated by the 3-D CAD technology, the use of laser scanners and/or multilink measuring systems to verify geometry, and using accurate scale models of the vessel and coils during the design and development processes. A 1/12 scale model of the present design verifies that the coils and vacuum vessel can be assembled as planned.

Potential Technical Risk #4. The vessel will fail mechanically

The fourth potential risk, that the vessel will fail mechanically, is mitigated by analysis and conservative design criteria. Critical analysis, such as disruption load calculations, stress and deflection calculations and buckling analysis will be performed by independent groups using different codes and models. The disruption loads are relatively small compared to a tokamak of similar size, so these are not expected to cause significant problems. The stresses will be compared to the ASME code allowables, which provide a safety factor of 1.5 on yield for primary membrane stresses at the operating temperature.

Potential Technical Risk #5. The vessel will not have adequate thermal performance

The fifth potential risk, that the vessel will not have adequate thermal performance, is mitigated by using the same temperature control system successfully used for the NSTX vessel. The system is designed to provide twice the heating capability and eight times the cooling capability predicted by analysis. Multiple redundant paths ensure that minor blockages or minor leaks will not affect overall performance.

Potential Technical Risk #6. The vessel will introduce static or transient field errors

The sixth potential risk, that the vessel will introduce field errors, is mitigated by the choice of material and the strict adherence to stellarator symmetry. The material, Inconel 625, has a relatively high electrical resistivity, about 50% higher than 300 series stainless steel. This results in an electrical time constant of less than 10 ms for the most persistent induced current path. In addition, the relative magnetic permeability of the material, even after forming and welding is very low, less than 1.01, so field errors due to induced magnetism should be negligible. Finally, the port locations and geometry are stellarator symmetric, so any currents that are induced in the vessel should also be stellarator symmetric.

Potential Technical Risk #7. The vessel will not permit sufficient access for inspection, maintenance or reconfiguration of internal components

The final potential risk, that the vessel will not permit sufficient access for maintenance and reconfiguration of internal components, is mitigated by providing as many ports as possible that are large enough for manned access. The three neutral beam locations each have a 14 x 33 inch oblong port that is accessible even with the beams installed. On either side of the neutral beam port are hourglass shaped ports with an 13.75 inch minimum width and 36 inch height, providing a total of six more manned access ports. Finally, the large neutral beam port cover flanges can be removed in at least one location to provide a clear, diamond shaped opening of 28 x 38 inches.

The cost and schedule risks associated with the vacuum vessel could also be significant, but steps have been and are being taken to reduce those risks substantially. Manufacturing studies were carried out during the conceptual design process to obtain advice from manufacturing engineers on ways to make the design easier or less expensive to fabricate. Five different studies of the vessel were carried out, and several fabrication processes were considered, including hot pressing, cold pressing, explosive forming, and casting. Vendor input has been continued after the CDR with an extensive R&D program. This effort will be carried out concurrently with the vessel design process such that the results can be included in the final design. Two different vendors will fabricate partial prototypes of critical regions of the vessel. The forming, welding, machining, polishing, and inspection processes will all be demonstrated and optimized. At the conclusion of the R&D phase, a fixed price contract will be awarded for the production vessel. The two vendors that have been selected for the R&D phase will result in at least two qualified vendors for the production articles, and provides an extra incentive to keep production costs (and bids) low.