Diagnostics plan for the national compact stellarator experiment

D. Johnson,[a] T. Brown, H. Neilson, G. Schilling, H. Takahashi, and M. Zarnstorff
Princeton Plasma Physics Laboratory, P.O. Box 451, Princeton, New Jersey 08540

M. Cole and E. Lazarus
Oak Ridge National Laboratory, Oak Ridge, Tennessee 37831

M. Fenstermacher
Lawrence Livermore National Laboratory, Livermore, California 94550

(Presented on 9 July 2002)

The National Compact Stellarator Experiment (NCSX) is a stellarator-tokamak hybrid seeking to combine the good confinement, high beta, and moderate aspect ratio of the tokamak with the quasi-steady-state operation and good stability properties of the stellarator. A preliminary list of measurement requirements, intended to satisfy the needs of the phased research plan, provides the basis for a full complement of plasma diagnostics. It is important to consider this full set, even at this early stage, to assess the adequacy of the stellarator design for diagnostic port access. The three-dimensional nature of the plasma is a measurement challenge, as is the necessity for high-spatial resolution to assess the quality of magnetic surfaces. Other diagnostic requirements include the need for re-entrant views that penetrate the cryostat, for a convenient *e*-beam probe for field line mapping, and for a diagnostic neutral beam for active spectroscopy. © *2003 American Institute of Physics.* [DOI: 10.1063/1.1538364]

I. INTRODUCTION

The mission of the National Compact Stellarator Experiment (NCSX) is to use the flexibility of three-dimensional (3D) shaping to combine the best features of stellarators and tokamaks. The project seeks to demonstrate conditions for high-beta, disruption-free operation by using externally generated helical fields at low-aspect ratio in a quasiaxisymmetric configuration with significant bootstrap current. This configuration has three periods with $R/\langle a\rangle = 4.4$ and $\langle \kappa \rangle = 1.8$, and is produced by 18 modular coils (three types), supplemented by a (PF) coil set and a weak (TF) set for flexibility. A set of external trim coils is planned to suppress $m=2$ islands. All coils are cooled to LN_2 temperature between shots within a cryostat. Many of these features appear in the cutaway view of NCSX shown in Fig. 1.

The configuration has been numerically optimized to be passively stable at $\beta = 4.1\%$ to kink, ballooning, vertical, Mercier, and neoclassical-tearing modes, without conducting walls or feedback systems. With $R = 1.4\,\mathrm{m}$, $B = 1.2-1.7\,\mathrm{T}$, the design features the capability to accommodate pulse lengths up to 1.2 s and 6–12 MW of heating, consisting of both tangential neutral beam and high-field launch rf. Field lines outside the last closed magnetic surface on NCSX accumulate in the tips of the bean-shaped cross sections, and for the high-power phases, it is envisioned that toroidally extended "divertor" target plates and baffles will be used in these regions for power and particle control. NCSX is predicted to achieve central $T_e(0)$, $T_i(0) \sim 1.8\,\mathrm{keV}$ at $n_e \sim 7 \times 10^{19}\,\mathrm{m}^{-3}$, corresponding to $\beta \sim 4\%$ The conceptual design for this device was successfully reviewed in May 2002, and the project path leads to first plasma in March 2007.[1]

This article describes the conceptual plan for diagnostic integration on NCSX. At this early stage, a top priority is to assure adequate diagnostic access is available in the design of the core machine. We present a preliminary vision of the diagnostic complement needed to satisfy the needs of the anticipated research program, along with an initial evaluation of the diagnostic access available in the current design. Finally we present short discussions of some challenges/opportunities for some specific diagnostic systems.

II. INTEGRATION OF DIAGNOSTICS WITH RESEARCH PLAN

A research plan was developed for the conceptual design. (For a complete listing of research topics within each phase and many other details of the conceptual design, see Ref. 1.) The six phases are listed in Table I along with the associated measurement needs identified to address the research topics.

Vacuum and coil system shakedown occurs in the initial operation phase lasting approximately one month, with a goal of achieving a plasma with toroidal current of $I_p > 25\,\mathrm{kA}$. The magnetic diagnostics needed to control the plasma would be debugged during this phase, and several other diagnostics would be implemented for basic monitoring, as indicated in Table I.

This would be followed by an approximately six month period for vacuum-field-mapping studies to verify the quality of the magnetic surfaces and identify errors in the design or assembly of the coil systems. A variety of vacuum configurations would be probed, with the coils first at room temperature and then cooled to normal operating temperature. Included for funding within the NCSX project are diagnostics

[a]Electronic mail: djohnson@pppl.gov

 © 2003 American Institute of Physics

Downloaded 17 Feb 2004 to 198.35.3.187. Redistribution subject to AIP license or copyright, see http://rsi.aip.org/rsi/copyright.jsp

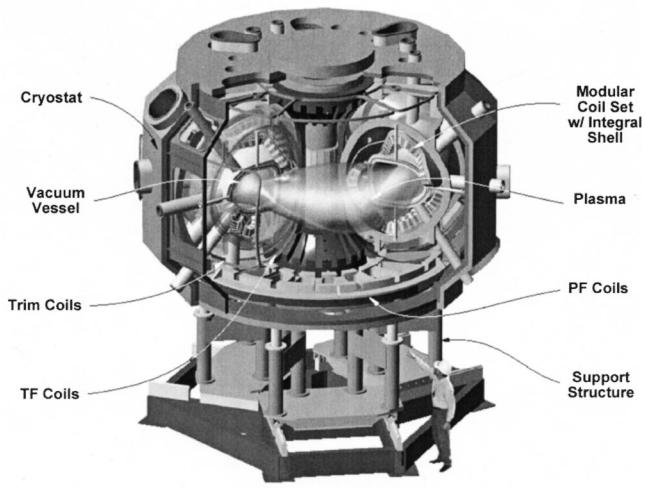

FIG. 1. Cut-away view of the stellarator core assembly.

needed to verify that the core device has met its engineering goals. These are the diagnostic systems listed for Phases 1 and 2.

Control of plasma position and shape is a primary goal of the ohmic phase. The diagnostics listed in Table I would also permit an assessment of the effect of three-dimensional (3D) shaping on global confinement, the dependence of the n_e and T_e profiles on iota I_p and trim coil current, and the impact of plasma contact position on plasma performance.

The mission elements begin to be addressed more directly in Phase 4, when 3 MW of tangential neutral beam heating is commissioned from two beamlines. This initial auxiliary heating campaign, which is envisioned to last approximately two years, will explore NCSX flexibility, plasma confinement, and stability at moderate β. The diagnostics listed for Phase 4 would permit local transport and stability analysis, in addition to a variety of other topics planned for this phase. Discharge evolution control to produce current profiles approximating the bootstrap profile will be tested. The trim coils will be used for controlled studies of rotation damping and neoclassical tearing modes. Fast ion confinement and influence on magnetohydrodynamics (MHD) will be evaluated. The edge and scrapeoff layer (SOL) will be characterized at moderate power.

The goal of the confinement and high-beta phase is to extend enhanced confinement regimes and investigate high-beta stability with a full complement of 6 MW from four sources and/or megawatt-level rf heating. This multiyear phase will also feature divertor target plates for power and particle handling in the natural divertor regions that form near the banana tips in the $v=0$ cross section. Many of the research topics planned for this phase will utilize diagnostics previously installed. New diagnostics will be needed for characterizing the divertor and for studying turbulence, and its role in determining transport.

The long pulse phase features heating system upgrades to allow pulse lengths of ~1 s, and power up to 12 MW, including possible upgrades of plasma facing components and divertors for improved power and particle handling.

TABLE I. Research phases, measurement needs, and diagnostics.

Phase/Measurement	Diagnostic technique
1. Initial operation (150 °C bake, GDC)	
I_p	Roqowski coils
Conductivity	flux loops+Ip
Boundary position and shape	magnetics+3D EFIT
Total stored energy	diamagnetic loop
Image of plasma/wall	video cameras with filters
n_e1	1 mm interferometer
2. Field mapping (no plasma)	
vacuum flux surfaces	*e*-beam probe+fluorescent rod/screen probe+high dyn. range CCD camera
3. Ohmic (three poloidal limiters)	
n_e profile	FIR interfer./polarim. Thomson scattering
T_e profile	Thomson scattering
T_i profile	x-ray crystal spectrometer
P_{rad} profile	core foil bolometer array
Low (m,n) MHD modes	multiple compact SXR arrays
Magnetic axis position	comp. SXR arrays+3D EFIT
Impurity identification	visible spectrometer
Impurity concentration	abs. UV spectroscopy
Z_{eff} profile	use Thomson scattering system
Hydrogen recycling	filtered 1D CCD camera
4. Initial auxiliary heating (3 MW NBI, PFCs, 350° bake)	
T_i, v_θ, v_ϕ profiles	DNB+toroidal, poloidal CHERS
Iota profile	DNB+MSE polarim.+3D EFIT
Higher (m,n) MHD modes	additional compact SXR arrays
Flux surface topology	tang. x-ray camera+3-D EFIT
Fast ion loss	fast ion loss probe, IR camera
Ion energy distribution	neutral particle analyzer
Neutron flux	epithermal neutron detector
High-frequency MHD (<5 MHz)	high-frequency Mirnov coils
First wall temperature	compact IR camera
SOL T_e and n_e	movable Langmuir probe
Edge neutral pressure	fast gauges
5. Confinement and beta push (6 MW heating, full divertor)	
Divertor prad profile	divertor bolometer arrays
Divertor plate temperature	fast IR camera
Target T_e, n_e	plate mounted Langmuir probes
Core π_e	fluctuation diagnostics TBD
SOL/edge T_e and n_e	fast scanning edge probe
Core helium density	DNB+He CHERS system
Divertor target temperature	divertor thermocouples
Divertor recycling	divertor filtered CCD camera
Divertor impurity conc., flows	divertor UV spectroscopy
6. Long pulse (pumped divertor)	
Divertor T_e, n_e profiles	divertor Thomson scattering

These upgrades should permit equilibration of the current profile to the bootstrap current and documentation of high-beta, disruption free operation for longer pulses.

The plan for research topics and associated diagnostic implementation will evolve as the project moves forward through the detailed design and construction phases. Preliminary measurement requirements, which help define the diagnostic needs derived from the research topics, and include specifications for spatial/temporal resolution and accuracy, have been developed in Ref. 1 for the diagnostics listed in Table I.

Downloaded 17 Feb 2004 to 198.35.3.187. Redistribution subject to AIP license or copyright, see http://rsi.aip.org/rsi/copyright.jsp

III. DIAGNOSTIC ACCESS ISSUES

Diagnostic access has been given high priority in the design of NCSX. In the year between the physics validation review and the conceptual design review, significant design changes in both the TF coils/supports and the cryostat were driven largely by a desire to improve diagnostic access. Port extensions permit diagnostic access through the cryostat and into the vacuum vessel. In the present design, these extensions are positioned on radial planes with their axes aimed nominally at the magnetic axis, in locations where they would clear modular coils, TF and PF coils. Positioning the TF coils at the mean toroidal position of the modular coils optimizes the space for the extensions. Along the length of a particular extension, the position of the vacuum seals would be outboard of the modular coil support ''shell,'' but could be inboard of the cryostat boundary. This flexibility is facilitated by a close-fitting, conformal cryostat featuring removable panels that can be tailored to diagnostic space needs. This will permit some port extensions to be made shorter, and will open up more space within the cryostat perimeter. Nonetheless, the extension lengths will drive the design of many diagnostics to compact, re-entrant systems. In addition, bake-out (350 °C for carbon PFCs and 150 °C for vacuum vessel) and normal operation with coils cooled will subject front-end assemblies to temperature excursions which may necessitate active regulation.

The number of ports available for diagnostics appears adequate. The present design has 96 ports, including four for neutral beam injectors. Approximately 60 of these ports are allocated to the diagnostics in Table I. Additional ports can accommodate auxiliary systems (fueling, wall conditioning, etc.) and future diagnostic needs. The most urgent near-term diagnostic activity is to optimize the orientation of the ports for some specific critical diagnostic views, perhaps deviating from the constraints that the port axes lie on radial planes and are directed to the magnetic axis.

IV. MAGNETICS

In addition to the vacuum transform, the target NCSX plasma has a significant poloidal flux contribution from the bootstrap current, beam-driven current, and ohmic current. There is little experience controlling the flux evolution of such a plasma in 3D, from discharge initiation to the high-beta phase. As part of the preliminary design, detailed modeling is planned to ascertain the optimum number, type, and placement of the sensors needed for equilibrium reconstruction and plasma control. The computational tools development to perform this analysis will be funded by the NCSX Program, collaborating with other stellarator groups and building upon existing tools. Rough estimates indicate that approximately 100 sensors of several different types will be required initially.

The magnetic sensors will likely include diamagnetic loops, flux loops, saddle loops, Rogowski coils, and B-dot coils which will provide signals necessary to determine the internal magnetic-field geometry using a 3D equilibrium reconstruction code. Because of the strong shaping in NCSX plasmas, such a reconstruction can provide important information on profiles of plasma pressure and toroidal current density.

There is adequate clearance in the device design to mount magnetic sensors. There is a minimum clearance of 50 mm between the back of the PFC panels and the inner surface of the vessel. The minimum clearance between the outside of the vessel and the modular coils is 25 mm. In most regions around the vacuum vessel, clearances exceed these values.

V. VACUUM FIELD MAPPING

The traditional mapping technique involves an electron beam that lights up a fluorescent mesh or movable fluorescent rod as the beam makes many traverses along a field line.[2–4] Light is detected by a charge-coupled camera (CCD) located at a suitable viewing window, with rather inefficient collection of the emitted light. To increase the sensitivity and time response, we are investigating other methods, which gather more of the light from the mesh or rod by collecting the light locally, perhaps with an array of vacuum compatible, phosphor-coated fiber optics. The fibers would relay the light from the strike points through a window to a high-dynamic-range CCD camera. Design goals include deployment of the probe without breaking vacuum, variable electron energy, and a spatial resolution of 2 mm. Careful metrology will reference the array to machine coordinates. Strike points will be compared to expectations of a code, which will compute the beam trajectory for given coil currents. Magnetic island structures will be investigated at reference vacuum configurations, and the influence of trim coil currents will be assessed.

VI. COMPACT SXR ARRAYS

X-ray tomography using a large number of sightlines in multiple fan arrays is a powerful technique for investigating MHD mode structure. Such arrays have been used on both tokamaks and stellarators, typically with extensive coverage in one or two poloidal cross sections.[5] In order to achieve such coverage on NCSX, it will be necessary to install compact arrays inside the vacuum vessel, between the first wall and the vacuum vessel. One example of such an implementation is shown in Fig. 2.

Currently, there is not a design available for the array module that is compact enough to fit within the 50 mm space constraint between the first wall and the inner vacuum vessel wall. It may be necessary to enlarge the vessel locally to accommodate realistic (SXR) array sizes. Using available technology, a minimum clearance of ~110 mm would be needed. It would be preferable to do this in a section near the oblate cross section ($\upsilon = 1/2$) such as that in Fig. 2, to take advantage of the flux expansion at this location.

VII. THOMSON SCATTERING

Because of the moderate density and relatively low-magnetic field on NCSX, it will not be possible to use conventional (ECE) techniques for measuring $T_e(R,t)$. Thus, Thomson scattering will be a key diagnostic, providing time-

Downloaded 17 Feb 2004 to 198.35.3.187. Redistribution subject to AIP license or copyright, see http://rsi.aip.org/rsi/copyright.jsp

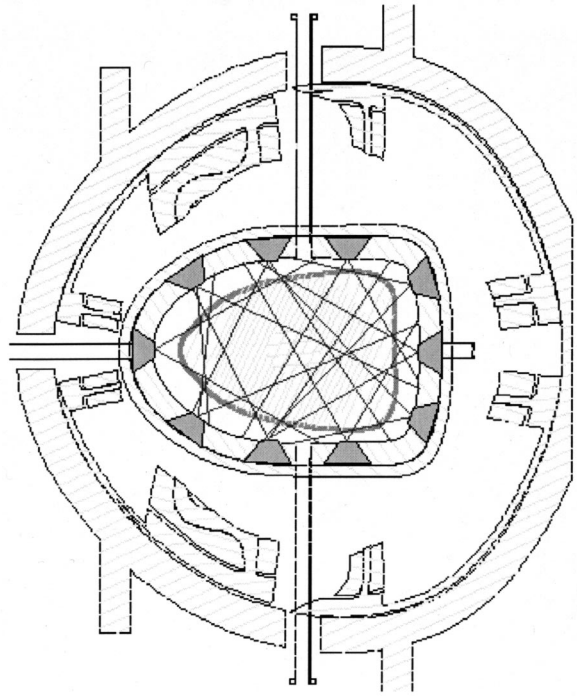

FIG. 2. Viewing concept for compact in-vessel soft x-ray arrays.

resolved profiles for T_e and n_e. At the same time, high-spatial resolution would also be very useful, for example, to characterize island and ''filament'' structures. The current concept for this diagnostic uses a Nd:YAG laser system with a laser repetition rate of ~100 Hz. Twenty filter polychromators will be used with four spectral channels each. Light from three positions in the plasma will be relayed via three different fiber optic bundle lengths to each polychromator. Fast transient recorders ($4\times20=80$ channels at 1 Gs/s) will resolve the three time-multiplexed signals from the avalanche photodiode (APD) detectors, following concepts developed for RFX, MAST, and JET.[6–8] In this way, a 60-point spatial profile will be recorded for each laser pulse, with a spatial resolution of ~1 cm. The laser is fired vertically at the ''banana'' symmetry plane, and imaged with a high throughput collection system at the outer midplane.

VIII. ACTIVE SPECTROSCOPY

The NCSX heating beams inject nearly parallel to flux surfaces. Because of the large beam cross section, this means that viewing the intersection of the beam with the core plasma region from any position results in sightlines that cross many flux surfaces, and hence poor spatial resolution. In principal, information from many views from different angles could be inverted to regain localization, this would be very difficult in the 3D geometry of NCSX.

A diagnostic neutral beam (DNB) injected as shown in Fig. 3, could be used for active spectroscopy. A CHERS system, viewing carbon charge-exchange emission, would then be used for profile measurements of T_i, v_θ, and v_ϕ. The DNB could also be used for iota profile measurements

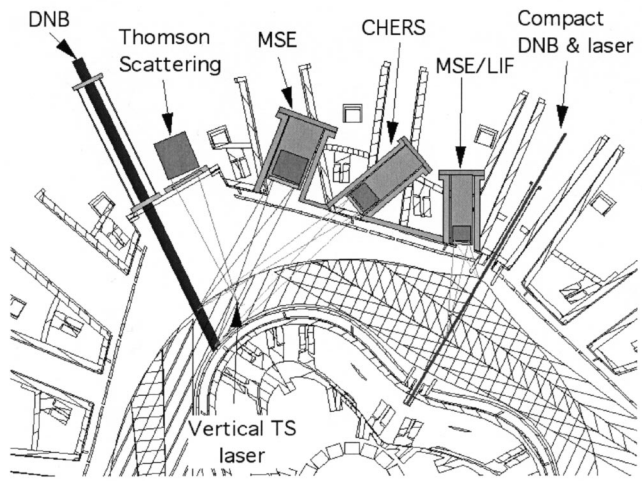

FIG. 3. Midplane cut of NCSX showing concepts for viewing geometries for active spectroscopy. To provide suitable views, proposals to shorten and reorient port extensions are under consideration.

with a (MSE) polarimeter system viewing H_α emission. A compact DNB and laser will be used with a second MSE system using laser-induced H_α fluorescence.[9] The two polarimeters should permit independent determinations of J and E_r. Figure 3 shows possible views for these active spectroscopy diagnostics. As indicated in the figure, further work is needed in the definition of port orientations to achieve suitable viewing geometries.

IX. SUMMARY

At the concept level, the NCSX project has a well-articulated research plan, and has identified a preliminary list of diagnostics phased to support these experiments. The detailed design is proceeding with an eye to providing adequate diagnostic access. As this diagnostic plan evolves, it will clearly benefit from community input. Diagnostics are entry points for establishing collaborative participation in NCSX, as they have on many other devices. Diagnostic working groups will be an important component of the NCSX research forums, which will begin in FY2005, and will serve to identify experts interested in developing diagnostics, and to seek and encourage new diagnostic development that might benefit NCSX.

ACKNOWLEDGMENTS

This research was supported by the U.S. Department of Energy under Contract No. DE-AC02-76CH03073.

[1] See http://www.pppl.gov/ncsx/Meetings/CDR
[2] M. Yamada *et al.*, Rev. Sci. Instrum. **61**, 686 (1990).
[3] H. Lin *et al.*, Rev. Sci. Instrum. **66**, 464 (1995).
[4] M. G. Shats *et al.*, Rev. Sci. Instrum. **66**, 1163 (1995).
[5] A. Weller, C. Gorner, and D. Gonda, Rev. Sci. Instrum. **70**, 484 (1999).
[6] L. Guidicotti *et al.*, Rev. Sci. Instrum. (these proceedings).
[7] M. Walsh *et al.*, Rev. Sci. Instrum. (these proceedings).
[8] P. Nielsen and R. Pasqualotto, JET-EP diagnostic proposal for high-resolution Thomson scattering system.
[9] J. Foley and F. Levinton, Rev. Sci. Instrum. (these proceedings).

Downloaded 17 Feb 2004 to 198.35.3.187. Redistribution subject to AIP license or copyright, see http://rsi.aip.org/rsi/copyright.jsp