NOTES

1. DRAWING PREPARED IN ACCORDANCE WITH ASME Y14.100-2004.
2. INTERPRET DIMENSIONS AND TOLERANCES PER ASME Y14.5M-1994.
3. DIMENSIONS ARE IN INCHES
4. SLIT INSULATION, F/N 4, AS REQ'D TO AID IN FORMING OVER FLANGE.
5. TUCK 1/2 TURN OF CLOTH, F/N 9 AND 10, PRIOR TO COVERING ENTIRE BLANKET, F/N 3 AND 4.
6. WRAP INSULATION AS REQUIRED TO ACHIEVE 2" THICKNESS.
7. BLANKET AND CLOTH LENGTHS/DIA WILL VARY AS PORT SIZES VARY. MATERIAL SIZES LISTED ARE BASED ON THE LARGER DIA PORT DIMENSIONS. TRIM EXCESS LENGTH/DIA FOR SMALLER SIZES AS REQ'D.
8. MAGNETIC PERMEABILITY NOT TO EXCEED 1.02 AS TESTED BY A SEVERN INDICATOR. AVAILABLE FROM:
   SEVERN ENGINEERING
   AUBURN, ALABAMA 36830
   WWW.SEVERNENGINEERING.COM

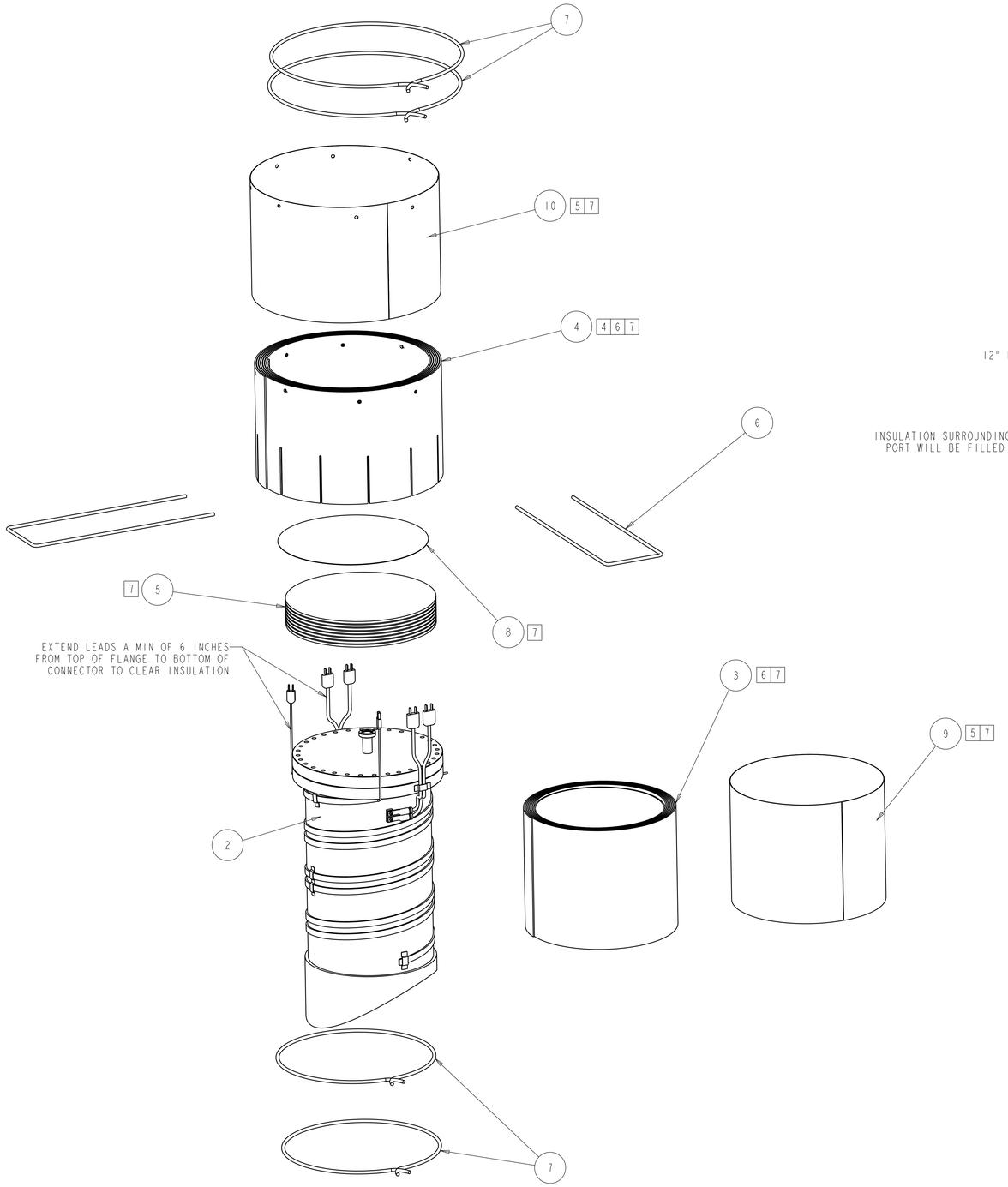

EXPLODED ISOMETRIC VIEW

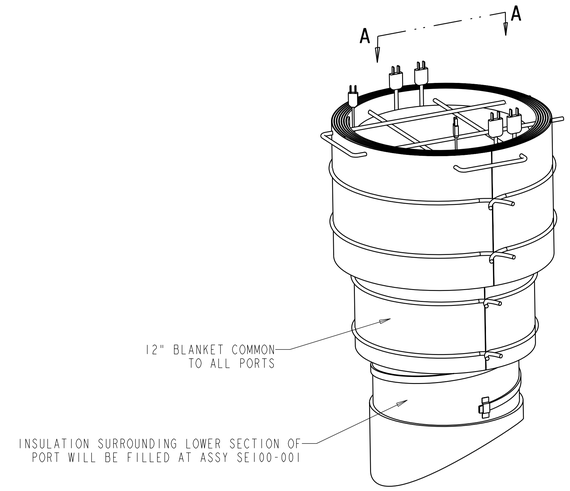

ISOMETRIC VIEW

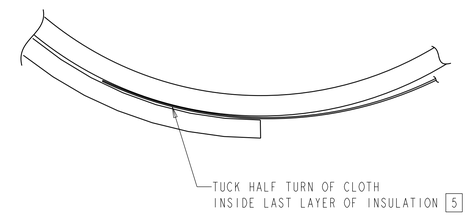

PARTIAL VIEW A-A
SCALE: NONE

RELEASED FOR FABRICATION / INSTALLATION
PPPL Drafting: Jerry Siegel 2007.01.09 11:57:18 -05'00'

-1 THRU -10 PORT 5, 6, 7, 9, 10 INSULATION ASSEMBLY
SCALE 0.250

	-10	-9	-8	-7	-6	-5	-4	-3	-2	-1	CAGE CODE	PART OR IDENTIFYING NO	NOMENCLATURE OR DESCRIPTION	MATERIAL	SPECIFICATION	FIND NO
5 7	1	1	1	1	1	1	1	1	1	1			NOMEX CLOTH	75 X 8	NCSX-PRL-12-001	10
5 7	1	1	1	1	1	1	1	1	1	1			NOMEX CLOTH	66 X 12	NCSX-PRL-12-001	9
7	1	1	1	1	1	1	1	1	1	1			NOMEX CLOTH	Ø12	NCSX-PRL-12-001	8
	AR	AR	AR	AR	AR	AR	AR	AR	AR	AR			Ø.05 WIRE TIE	316L ANNEALED	ASTM A313	7
	1	1	1	1	1	1	1	1	1	1			CAP RETAINING STAPLE Ø.12 WIRE, 11" LEGS, 2" CENTERS	316L ANNEALED	ASTM A313	6
7	8	8	8	8	8	8	8	8	8	8			PYROGEL CAP BLANKET	Ø12 X .25 THK	NCSX-PRL-12-004	5
4 6 7	1	1	1	1	1	1	1	1	1	1			PYROGEL FLANGE BLANKET	400 X 8 X .25 THK	NCSX-PRL-12-004	4
6 7	1	1	1	1	1	1	1	1	1	1			PYROGEL PORT BLANKET	340 X 12 X .25 THK	NCSX-PRL-12-004	3
	1											SE123-150-10	PORT 10B WITH HEATER TAPE AND THERMOCOUPLE ASSEMBLY			2
		1										SE123-150-9	PORT 10A WITH HEATER TAPE AND THERMOCOUPLE ASSEMBLY			2
			1									SE123-150-8	PORT 9B WITH HEATER TAPE AND THERMOCOUPLE ASSEMBLY			2
				1								SE123-150-7	PORT 9A WITH HEATER TAPE AND THERMOCOUPLE ASSEMBLY			2
					1							SE123-150-6	PORT 7B WITH HEATER TAPE AND THERMOCOUPLE ASSEMBLY			2
						1						SE123-150-5	PORT 7A WITH HEATER TAPE AND THERMOCOUPLE ASSEMBLY			2
							1					SE123-150-4	PORT 6B WITH HEATER TAPE AND THERMOCOUPLE ASSEMBLY			2
								1				SE123-150-3	PORT 6A WITH HEATER TAPE AND THERMOCOUPLE ASSEMBLY			2
									1			SE123-150-2	PORT 5B WITH HEATER TAPE AND THERMOCOUPLE ASSEMBLY			2
										1		SE123-150-1	PORT 5A WITH HEATER TAPE AND THERMOCOUPLE ASSEMBLY			2
AR												-10	PORT 10B INSULATION ASSEMBLY			1
AR												-9	PORT 10A INSULATION ASSEMBLY			1
AR												-8	PORT 9B INSULATION ASSEMBLY			1
AR												-7	PORT 9A INSULATION ASSEMBLY			1
AR												-6	PORT 7B INSULATION ASSEMBLY			1
AR												-5	PORT 7A INSULATION ASSEMBLY			1
AR												-4	PORT 6B INSULATION ASSEMBLY			1
AR												-3	PORT 6A INSULATION ASSEMBLY			1
AR												-2	PORT 5B INSULATION ASSEMBLY			1
AR												-1	PORT 5A INSULATION ASSEMBLY			1
SE100-002												NEXT ASSEMBLY	PARTS LIST			

SE122-081

REV	DESCRIPTION	BY	DATE	CHK	DEPT	DATE	PE	REQ	DATE	ORNL	DOE	DATE
0	ORIGINAL ISSUE	GWM	01/07	SP		01/07						

REVISION OR ISSUE PURPOSE — REVISION APPROVAL

SCALE NOTED
TOLERANCES UNLESS OTHERWISE SPECIFIED
FRACTIONS :
XX DECIMALS ±.01
XXX DECIMALS ±.005
ANGLES ±0°15'
BREAK SHARP EDGES .06 MAX
FINISH .125 UNLESS OTHERWISE SPECIFIED

DRAWING APPROVALS		DATE
DES	PL GORANSON	01/07
DRW	G MCGINNIS	01/07
CHK	S PARSON	01/07
SECT	:	:
DEPT	:	:
PE	:	:
CR	:	:
PJ	:	:
REQ	:	:
PPPL DRFT	J SIEGEL	01/07
	:	:
	:	:

UT-BATTELLE
Oak Ridge National Laboratory managed for the DEPARTMENT OF ENERGY under U.S. GOVERNMENT contract DE-AC05-000R22725 UT-BATTELLE, LLC. Oak Ridge, Tennessee

PROJECT NAME: NATIONAL COMPACT STELLARATOR EXPERIMENT

PORT 5, 6, 7, 9, 10 INSULATION ASSEMBLY TYPICAL INSTALLATION

VERSION NO.	PLANT	BLDG	FL	SHT	OF	TYPE	CLASS
9	ORNL	5700	3	1	1	A	U

RELEASE LEVEL: Fabrication — SE122-081 — REV 0

NO REPRESENTATION OR WARRANTY,EXPRESSED OR IMPLIED,IS MADE AS TO THE ACCURACY, COMPLETENESS OR USEFULNESS OF THE INFORMATION OR STATEMENTS CONTAINED IN THESE DRAWINGS, OR THAT THE USE OR DISCLOSURE OF ANY INFORMATION, APPARATUS, METHOD OR PROCESS DISCLOSED IN THESE DRAWINGS MAY NOT INFRINGE PRIVATE RIGHTS OF OTHERS. NO LIABILITY IS ASSUMED WITH RESPECT TO THE USE OF, OR FOR DAMAGES RESULTING FROM THE USE OF, ANY INFORMATION, APPARATUS, METHOD OR PROCESS DISCLOSED IN THESE DRAWINGS. DRAWINGS MADE AVAILABLE FOR INFORMATION TO BIDDER ARE NOT TO BE USED FOR OTHER PURPOSES, AND ARE TO BE RETURNED UPON REQUEST OF THE FORWARDING CONTRACTOR.

P THIS DRAWING PRODUCED ON PRO-ENGINEER