NOTES

1. DRAWING PREPARED IN ACCORDANCE WITH ASME Y14.100-2004.
2. INTERPRET DIMENSIONS AND TOLERANCES PER ASME Y14.5M-1994.
3. DIMENSIONS ARE IN INCHES.
4. PART TO BE MANUFACTURED FROM PRO/ENGINEER DATA FILE SE122-382.PRT. DIMENSIONS SHOWN ARE FOR PART VERIFICATION ONLY.

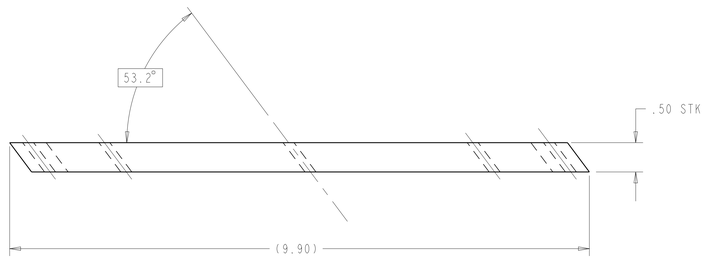

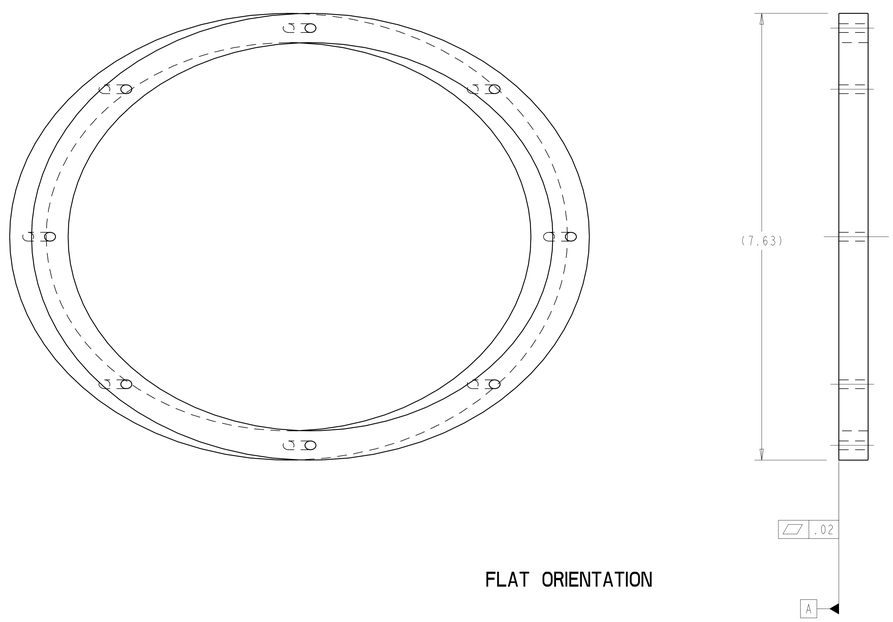

FLAT ORIENTATION

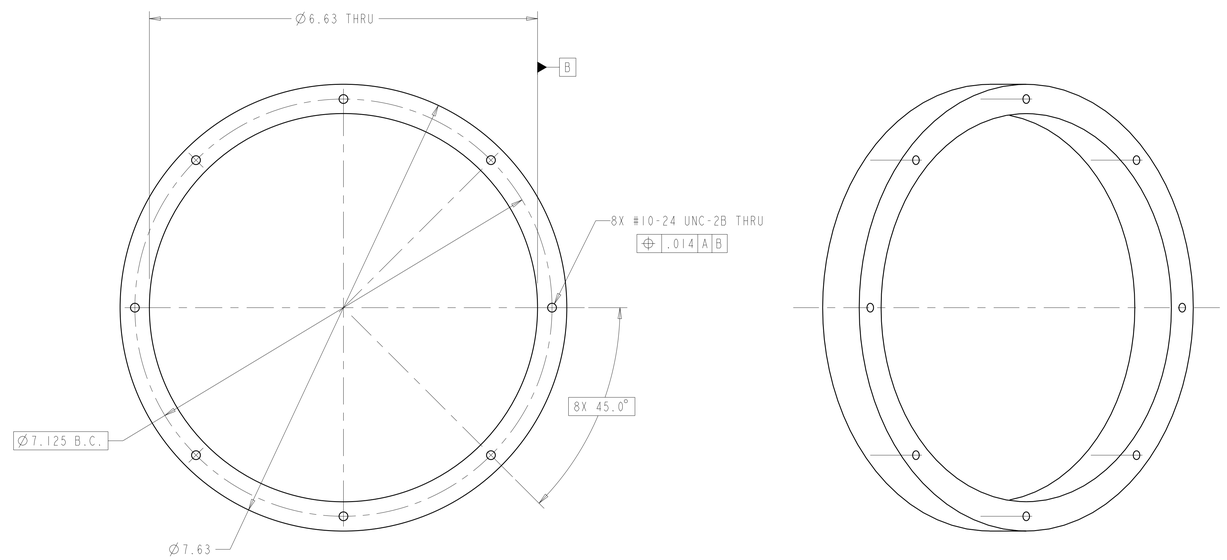

INSTALLED ORIENTATION

1 PORT 18 WINDING FORM SEAL INNER PLATE 4

SCALE 1.000

RELEASED FOR FABRICATION / INSTALLATION

PPPL Drafting: Jerry Siegel 2007.02.13 11:03:34 -05'00'

4	AR		-1	PORT 18 WINDING FORM SEAL INNER PLATE	GAROLITE	G-11	1
SE122-380-1	CAGE CODE		PART OR IDENTIFYING NO	NOMENCLATURE OR DESCRIPTION	MATERIAL	SPECIFICATION	FIND NO
		NEXT ASSEMBLY		PARTS LIST			

SE122-382

NO REPRESENTATION OR WARRANTY, EXPRESSED OR IMPLIED, IS MADE AS TO THE ACCURACY, COMPLETENESS OR USEFULNESS OF THE INFORMATION OR STATEMENTS CONTAINED IN THESE DRAWINGS, OR THAT THE USE OR DISCLOSURE OF ANY INFORMATION, APPARATUS, METHOD OR PROCESS DISCLOSED IN THESE DRAWINGS MAY NOT INFRINGE PRIVATE RIGHTS OF OTHERS. NO LIABILITY IS ASSUMED WITH RESPECT TO THE USE OF, OR FOR DAMAGES RESULTING FROM THE USE OF, ANY INFORMATION, APPARATUS, METHOD OR PROCESS DISCLOSED IN THESE DRAWINGS. DRAWINGS MADE AVAILABLE FOR INFORMATION TO BIDDER ARE NOT TO BE USED FOR OTHER PURPOSES, AND ARE TO BE RETURNED UPON REQUEST OF THE FORWARDING CONTRACTOR.

P THIS DRAWING PRODUCED ON PRO-ENGINEER

REV	DESCRIPTION (REVISION OR ISSUE PURPOSE)	BY	DATE	CHK	DEPT	DATE	PE	REQ	DATE	ORNL	DOE	DATE
0	ORIGINAL ISSUE	RAH	01/07	SP		01/07						

SCALE NOTED

TOLERANCES UNLESS OTHERWISE SPECIFIED

FRACTIONS ±
XX DECIMALS ±.01
XXX DECIMALS ±.005
ANGLES ±0°15'
BREAK SHARP EDGES .06 MAX
FINISH .125 UNLESS OTHERWISE SPECIFIED

DRAWING APPROVALS		DATE
DES	P.L.GORANSON	01/07
DRW	R.A.HURD	01/07
CHK	S PARSON	01/07
SECT	:	:
DEPT	:	:
PE	:	:
CR	:	:
PJ	:	:
REQ	:	:
PPPL DRFT	J SIEGEL	01/07
	:	:
	:	:

UT-BATTELLE

Oak Ridge National Laboratory
managed for the DEPARTMENT OF ENERGY under
U.S. GOVERNMENT contract DE-AC05-000R22725
UT-BATTELLE, LLC. Oak Ridge, Tennessee

PROJECT NAME: NATIONAL COMPACT STELLARATOR EXPERIMENT

PORT 18 WINDING FORM SEAL INNER PLATE

VERSION NO.	PLANT	BLDG	FL	SHT	OF	TYPE	CLASS
4	ORNL	5700	3	1	1	S	U

RELEASE LEVEL		REV
Fabrication	SE122-382	0