NEXT ASS'Y: FINAL ASS'Y:

NOTES:

1. INTERPRET DIMENSIONS AND TOLERANCES PER ANSI Y14.5M
2. DIMENSIONS ARE IN INCHES
3. DIMENSIONS APPLY AT TEMPERATURE OF 20-30°C (68-86°F)
4. DRAWING DEPICTS FINAL MACHINED STATE OF PART DEFINED BY PRO/ENGINEER FILE SE124-014.PRT
5. APPROXIMATE WEIGHT= 0.37 lbs.
6. MINIMUM RADIAL ULTIMATE STATIC LOAD REQUIREMENT 29,300 LBS
7. ALL METAL, THREE PIECE ASSEMBLY.
8. MAXIMUM OPERATING TEMPERATURE 662° F.
9. MISALIGNMENT ANGLE SHALL BE A MINIMUM OF ±6 DEGREES
10. MAGNETIC PERMEABILITY SHALL NOT EXCEED 1.02.
11. DRY LUBRICATE MOVING SURFACES WITH A NON-MAGNETIC LUBRICANT SUITABLE FOR OPERATION @ 662°F.

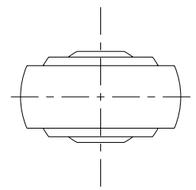

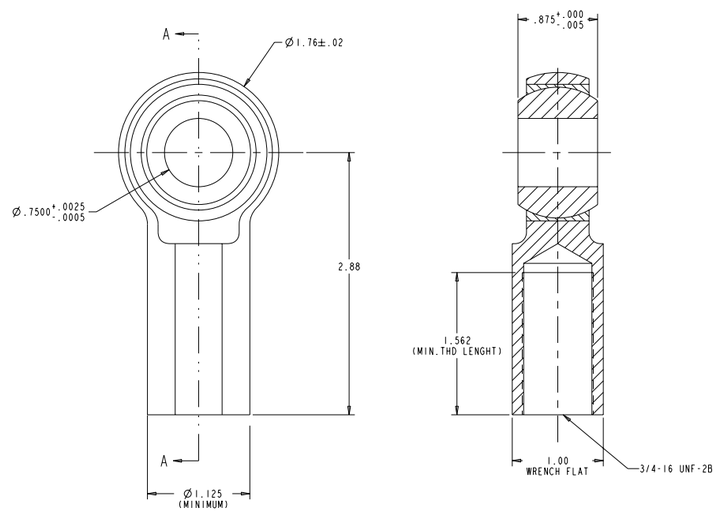

SECTION A-A

1 SCALE: 2.00

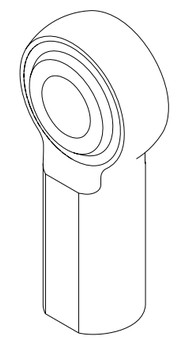

ISOMETRIC VIEW

RELEASED FOR FABRICATION / INSTALLATION
PPPL Jerry Siegel

next assy							
	AR	AR	-1	VERTICAL SUPPORT ROD END, FEMALE	TITANIUM 6AL-4V		1
	SE124-051	SE124-054	CAGE CODE / PART OR IDENTIFYING NO	NOMENCLATURE OR DESCRIPTION	MATERIAL	SPECIFICATION	FIND NO
			NEXT ASSEMBLY	PARTS LIST			

SE124-014

NO REPRESENTATION OR WARRANTY,EXPRESSED OR IMPLIED,IS MADE AS TO THE ACCURACY, COMPLETENESS OR USEFULNESS OF THE INFORMATION OR STATEMENTS CONTAINED IN THESE DRAWINGS, OR THAT THE USE OR DISCLOSURE OF ANY INFORMATION, APPARATUS, METHOD OR PROCESS DISCLOSED IN THESE DRAWINGS MAY NOT INFRINGE PRIVATE RIGHTS OF OTHERS. NO LIABILITY IS ASSUMED WITH RESPECT TO THE USE OF, OR FOR DAMAGES RESULTING FROM THE USE OF, ANY INFORMATION, APPARATUS, METHOD OR PROCESS DISCLOSED IN THESE DRAWINGS. DRAWINGS MADE AVAILABLE FOR INFORMATION TO BIDDER ARE NOT TO BE USED FOR OTHER PURPOSES, AND ARE TO BE RETURNED UPON REQUEST OF THE FORWARDING CONTRACTOR.

P THIS DRAWING PRODUCED ON PRO-ENGINEER

REV	DESCRIPTION	BY	DATE	CHK	DEPT	DATE	PE	REQ	DATE	ORNL	DOE	DATE
0	ORIGINAL ISSUE	GHJ	3/3/05									

REVISION OR ISSUE PURPOSE — REVISION APPROVAL

SCALE NOTED

TOLERANCES UNLESS OTHERWISE SPECIFIED

FRACTIONS ±
XX DECIMALS ±.01
XXX DECIMALS ±.005
ANGLES ±0°15'
BREAK SHARP EDGES .06 MAX
FINISH 125 UNLESS OTHERWISE SPECIFIED

DES	PAUL MILLER	08-17-04
DRW	PAUL MILLER	08-17-04
CHK	J.M.RAY	04-07-05
SECT	:	:
DEPT	:	:
PE	:	:
CR	:	:
PJ	:	:
REQ	:	:
PPPL DRFT	:	:
	:	:
	:	:
	:	:

DRAWING APPROVALS — DATE

UT-BATTELLE

Oak Ridge National Laboratory
managed for the DEPARTMENT OF ENERGY under U.S. GOVERNMENT contract DE-AC05-00OR22725
UT-BATTELLE, LLC. Oak Ridge, Tennessee

PROJECT NAME: NATIONAL COMPACT STELLARATOR EXPERIMENT

VERTICAL SUPPORT ROD END, FEMALE DETAIL

VERSION NO.	PLANT	BLDG	FL	SHT	OF	TYPE	CLASS
14	X-10	5700	3	1	1	S	U

RELEASE LEVEL: Fabrication — SE124-014 — REV 0