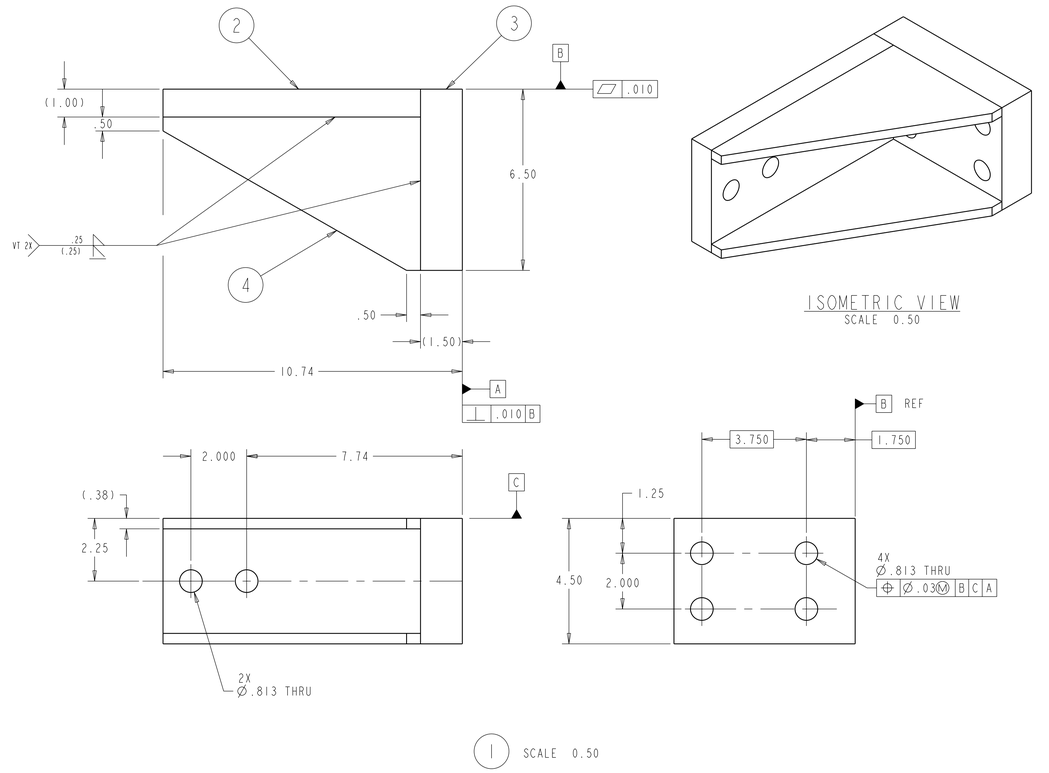

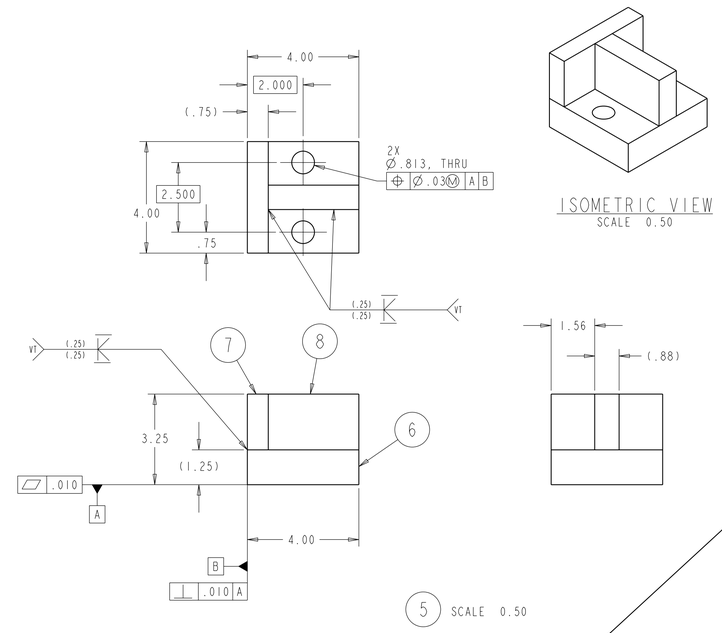

NOTES:

1. INTERPRET DIMENSIONS AND TOLERANCES PER ANSI Y14.5M
2. DIMENSIONS ARE IN INCHES
3. WELDING PROCEDURES AND PERFORMANCE QUALIFICATIONS SHALL BE PERFORMED IN ACCOURDANCE WITH THE RREQUIREMENTS OF ASME CODE, SECTION IX. WELDS MAY BE MADE BY THE GTAW OR GMAW PROCESSES. WELDS USING SMAW PROCESS ARE NOT PERMITTED.
4. WELD INSPECTIONS SHALL BE PERFORMED BY VISUAL EXAMINATION: ALL WELDS ARE TO BE VISUALLY INSPECTED IN ACCORDANCE WITH ARTICLE 9, SECTION V OF THE ASME CODE. WELDS DESIGNATED WITH A VT IN THE REFERENCE AREA OF A WELD SYMBOL SHALL ALSO BE VISUALLY EXAMINED WITH 8X MAGNIFICATION, IN ACCORDANCE WITH ARTICLE 6, SECTION V OF THE ASME CODE. THE ACCEPTANCE CRITERIA FOR THE VISUALLY INSPECTED WELDS SHALL BE IN ACCORDANCE WITH AWS D1.6, 6.29.1
5. DIMENSIONS APPLY AT TEMPERATURE OF 20-30°C (68-86°F)
6. ITEM -5 MAY BE MACHINED FROM A SINGLE PIECE, AT DISCRETION OF VENDOR.

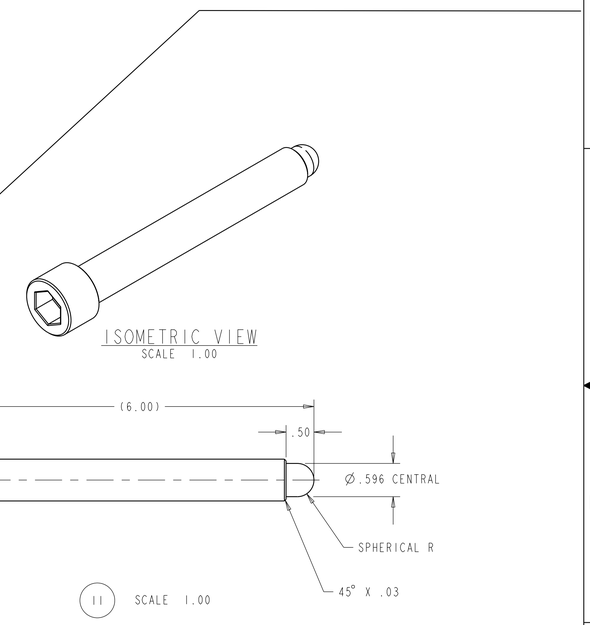

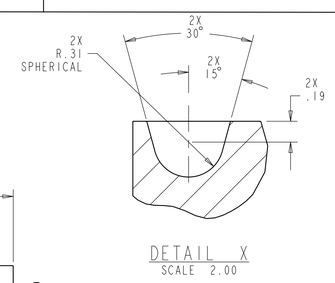

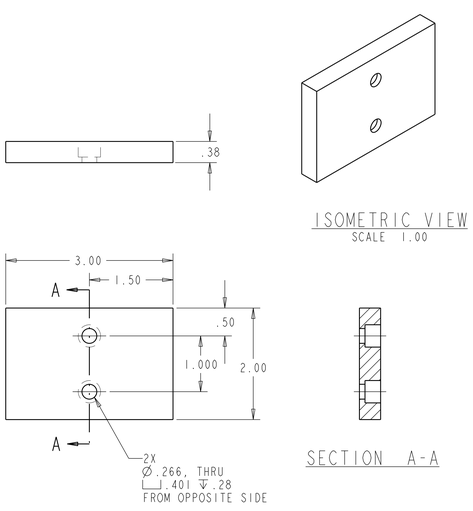

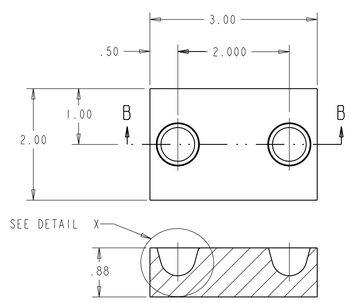

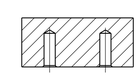

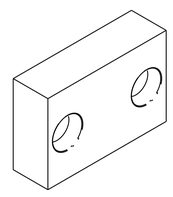

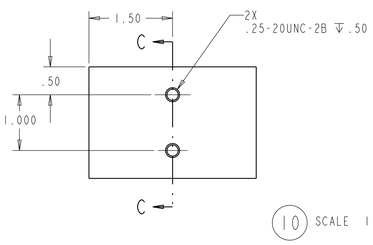

RELEASED FOR FABRICATION / INSTALLATION
PPPL Drafting: ? Jerry Siegel 2005.10.28 13:34:54 -05'00'

WELDING ENGINEER
APPROVED B. KEILBACH DATE: 10/05

	AR	AR		-12	WELD, FILLER METAL		12
AR				.75-10UNC X 6.00 LG	SCREW, SOC HD CAP (MODIFIED)	NICKEL ALLOY A286	ASME B18.3	11
AR				-10	PAD	316 SST	ASTM 240	10
AR				-9	INSULATING PAD	G-11		9
	1			-8	WEB, .88 THK	316 SST	ASTM 240	8
	1			-7	FRONT PLATE, .75 THK	316 SST	ASTM 240	7
	1			-6	BASE PLATE, 1.25 THK	316 SST	ASTM 240	6
AR	X			-5	NB PORT STOP BRACKET WELDMENT			5
		2		-4	WEB, .38 THK	316 SST	ASTM 240	4
		1		-3	SIDE PLATE 1.50 THK	316 SST	ASTM 240	3
		1		-2	FRONT PLATE, 1.00 THK	316 SST	ASTM 240	2
AR		X		-1	MODULAR COIL WINDING FORM BRACKET WELDMENT			1
SE124-071	-5	-1	CAGE CODE	PART OR IDENTIFYING NO	NOMENCLATURE OR DESCRIPTION	MATERIAL	SPECIFICATION	FIND NO
				NEXT ASSEMBLY	PARTS LIST			

SE124-073

REV	DESCRIPTION	BY	DATE	CHK	DEPT	DATE	PE	REQ	DATE	ORNL	DOE	DATE
0	ORIGINAL ISSUE	GHJ	3/3/05	JMR								

REVISION OR ISSUE PURPOSE — REVISION APPROVAL

SCALE NOTED
TOLERANCES UNLESS OTHERWISE SPECIFIED
FRACTIONS
XX DECIMALS ±.03
XXX DECIMALS ±.005
ANGLES ±0°15'
BREAK SHARP EDGES .06 MAX
FINISH .125 UNLESS OTHERWISE SPECIFIED

DRAWING APPROVALS		DATE
DES	P.L.GORANSON	02/16/05
DRW	G.H.JONES	02/16/05
CHK	J.M.RAY	04-07-05
SECT	:	:
DEPT	:	:
PE	:	:
CR	:	:
PJ	:	:
REQ	:	:
PPPL DRFT	J SIEGEL	10/05

UT-BATTELLE
Oak Ridge National Laboratory
managed for the DEPARTMENT OF ENERGY under U.S. GOVERNMENT contract DE-AC05-00OR22725
UT-BATTELLE, LLC. Oak Ridge, Tennessee

PROJECT NAME: NATIONAL COMPACT STELLARATOR EXPERIMENT

LATERAL SUPPORT
MODULAR COIL WINDING FORM BRACKET
WELDMENTS & DETAILS

VERSION NO.	PLANT	BLDG	FL	SHT	OF	TYPE	CLASS
9	ORNL	5700	3	1	1	A	U

RELEASE LEVEL: Fabrication — SE124-073 — REV 0

NO REPRESENTATION OR WARRANTY,EXPRESSED OR IMPLIED,IS MADE AS TO THE ACCURACY, COMPLETENESS OR USEFULNESS OF THE INFORMATION OR STATEMENTS CONTAINED IN THESE DRAWINGS, OR THAT THE USE OR DISCLOSURE OF ANY INFORMATION, APPARATUS, METHOD OR PROCESS DISCLOSED IN THESE DRAWINGS MAY NOT INFRINGE PRIVATE RIGHTS OF OTHERS. NO LIABILITY IS ASSUMED WITH RESPECT TO THE USE OF, OR FOR DAMAGES RESULTING FROM THE USE OF, ANY INFORMATION, APPARATUS, METHOD OR PROCESS DISCLOSED IN THESE DRAWINGS. DRAWINGS MADE AVAILABLE FOR INFORMATION TO BIDDER ARE NOT TO BE USED FOR OTHER PURPOSES, AND ARE TO BE RETURNED UPON REQUEST OF THE FORWARDING CONTRACTOR.

P THIS DRAWING PRODUCED ON PRO-ENGINEER