NOTES

1. DRAWING PREPARED IN ACCORDANCE WITH ASME Y14.100-2004.
2. INTERPRET DIMENSIONS AND TOLERANCES PER ASME Y14.5M-1994.
3. DIMENSIONS ARE IN INCHES
4. MAGNETIC PERMEABILITY NOT TO EXCEED 1.02 AS TESTED BY A SEVERN INDICATOR. AVAILABLE FROM:
   SEVERN ENGINEERING
   AUBURN, ALABAMA 36830
   WWW.SEVERNENGINEERING.COM
5. SHIMS TO BE ANNEALED AFTER ALL CUTTING AND GRINDING IF PERMEABILITY SPEC IN NOTE 4 IS NOT MEET
6. SHIMS MAY BE FIELD TRIMMED AS REQUIRED
7. COMPLETED PARTS TO BE CLEAN AND FREE OF ANY OIL, DEBRIS, OR CONTAMINATES.
8. EXTRA MATERIAL ALONG THIS EDGE OF AA-1 AND AA-6 MAY BE TRIMMED AS NECESSARY PRIOR TO PREP FOR WELDING. (1)

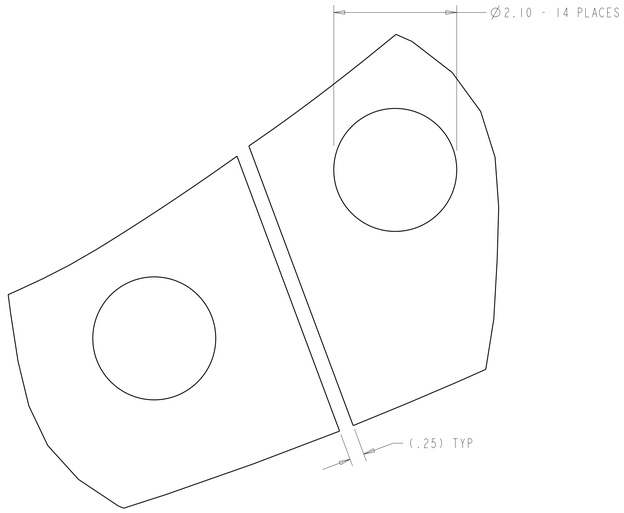

DETAIL A
SCALE 1.00

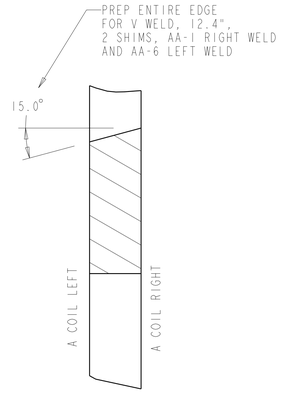

SECTION C-C
SCALE 2.00

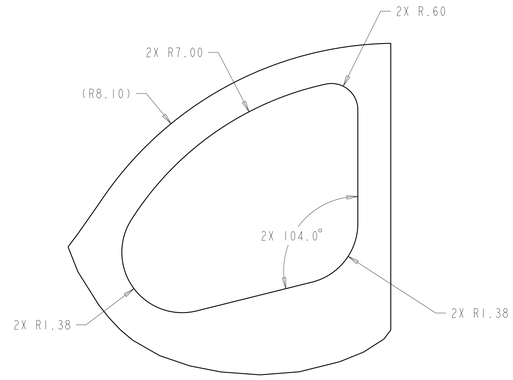

DETAIL B
SCALE 0.75

ISOMETRIC VIEW
SCALE 0.10

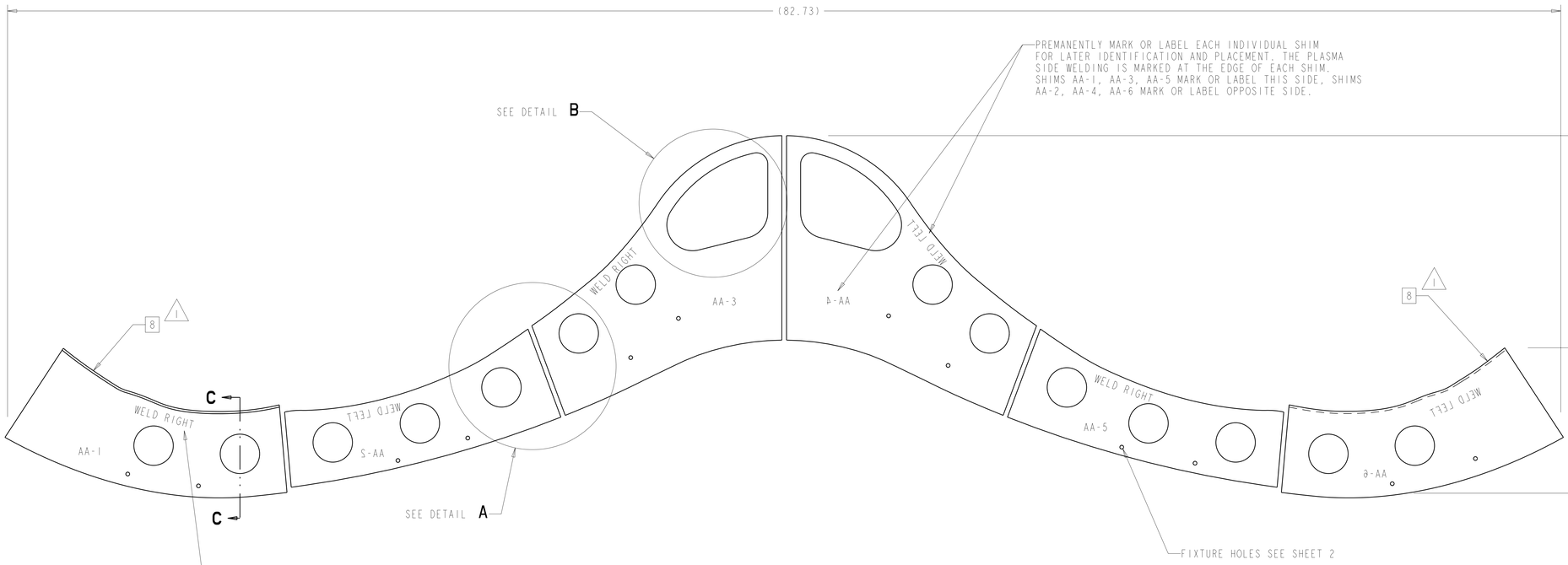

-1 AA INBOARD SHEAR PLATE (1)
SCALE 0.38

NOTE: PART TO BE CUT FROM FULL SIZE TEMPLATE CREATED BY DXF FILE SE140-054.DXF, SEE SHEET 2.

AR		-1	AA INBOARD SHEAR PLATE	316L ANNEALED	ASTM A240	1
SE140-003	CAGE CODE	PART OR IDENTIFYING NO	NOMENCLATURE OR DESCRIPTION	MATERIAL	SPECIFICATION	FIND NO
		NEXT ASSEMBLY	PARTS LIST			

RELEASED FOR FABRICATION / INSTALLATION
PPPL Drafting: Jerry Siegel 2008.01.16 10:01:36 -05'00'

NO REPRESENTATION OR WARRANTY,EXPRESSED OR IMPLIED, IS MADE AS TO THE ACCURACY, COMPLETENESS OR USEFULNESS OF THE INFORMATION OR STATEMENTS CONTAINED IN THESE DRAWINGS, OR THAT THE USE OR DISCLOSURE OF ANY INFORMATION, APPARATUS, METHOD OR PROCESS DISCLOSED IN THESE DRAWINGS MAY NOT INFRINGE PRIVATE RIGHTS OF OTHERS. NO LIABILITY IS ASSUMED WITH RESPECT TO THE USE OF, OR FOR DAMAGES RESULTING FROM THE USE OF, ANY INFORMATION, APPARATUS, METHOD OR PROCESS DISCLOSED IN THESE DRAWINGS. DRAWINGS MADE AVAILABLE FOR INFORMATION TO BIDDER ARE NOT TO BE USED FOR OTHER PURPOSES, AND ARE TO BE RETURNED UPON REQUEST OF THE FORWARDING CONTRACTOR.

P THIS DRAWING PRODUCED ON PRO-ENGINEER

REV	DESCRIPTION (REVISION OR ISSUE PURPOSE)	BY	DATE	CHK	DEPT	DATE	PE	REQ	DATE	ORNL	DOE	DATE
1	PER ECN # 5319	GM	01/08	MC		01/08						
1	ADDED NOTE 8, CHANGED TITLE,											
1	ADDED EXTRA MATERIAL TO AA-1 AND AA-6,											
0	ORIGINAL ISSUE	SH	01/08	MC		01/08						

SCALE NOTED
TOLERANCES UNLESS OTHERWISE SPECIFIED
FRACTIONS ±
XX DECIMALS ±.01
XXX DECIMALS ±.005
ANGLES ±0°15'
BREAK SHARP EDGES .06 MAX
FINISH 125 UNLESS OTHERWISE SPECIFIED

DRAWING APPROVALS		DATE
DES	D WILLIAMSON	01/2008
DRW	S HOMESCU	01/2008
CHK	M COLE	01/2008
SECT	:	:
DEPT	:	:
PE	:	:
CR	:	:
PJ	:	:
REQ	:	:
PPPL DRFT	J SIEGEL	01/2008

UT-BATTELLE
Oak Ridge National Laboratory
managed for the DEPARTMENT OF ENERGY under U.S. GOVERNMENT contract DE-AC05-000R22725
UT-BATTELLE, LLC. Oak Ridge, Tennessee

PROJECT NAME: NATIONAL COMPACT STELLARATOR EXPERIMENT

A-A INBOARD SHEAR PLATE

VERSION NO.	PLANT	BLDG	FL	SHT	OF	TYPE	CLASS
0	ORNL	5700	3	1	2	S	U

RELEASE LEVEL: Fabrication
SE140-054
REV 1

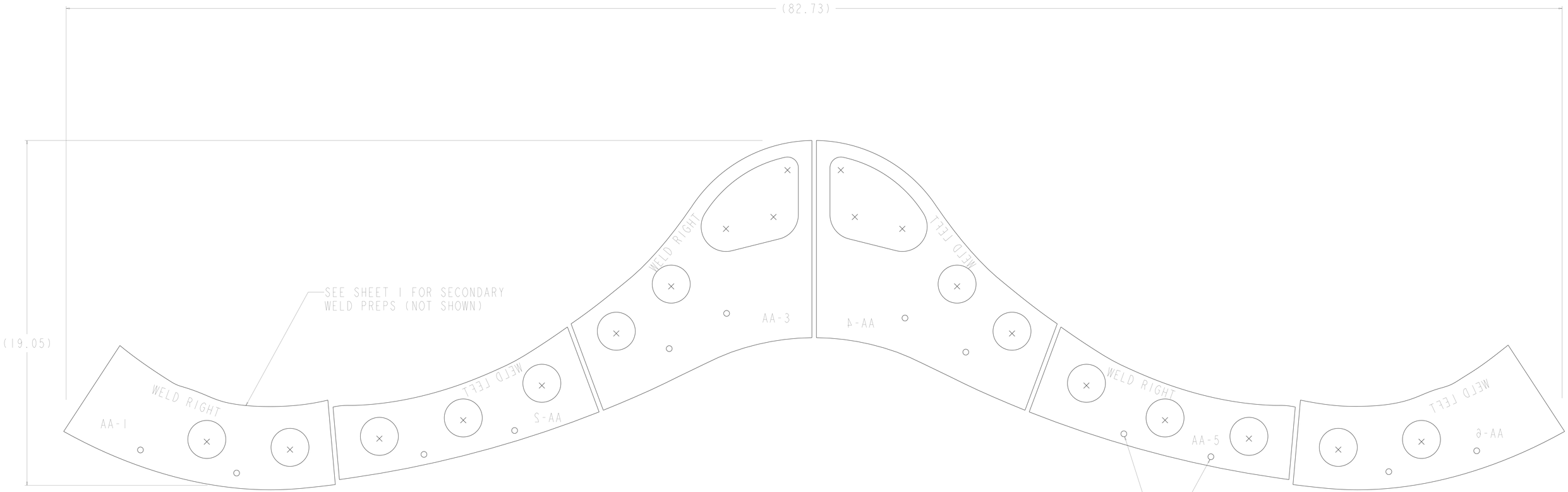

NOTE: PART SIZE AND HOLE LOCATIONS MUST NOT DEVIATE FROM DXF FILE BY MORE THAN ± .03

2 FIXTURE HOLES PER SHIM, Ø.31 DIA, MAY BE LOCATED APPROXIMATLY IN AREAS SHOWN AS REQUIRED.

FULL SIZE TEMPLATE - CREATED FROM DXF FILE SE140-054.DXF

SCALE 1 : 1

RELEASED FOR FABRICATION / INSTALLATION
2011 Brainerd Jerry Siegel 10/4/2011

UT-BATTELLE
Oak Ridge National Laboratory
managed for the DEPARTMENT OF ENERGY under
U.S. DEPARTMENT OF ENERGY CONTRACT DE-AC05-00OR22725
UT-BATTELLE, LLC Oak Ridge, Tennessee

NATIONAL COMPACT STELLARATOR EXPERIMENT

A-A INBOARD SHEAR PLATE

VERSION NO	ACAD	ACAD	FL	CAT	SP	TYP	CLASS
Construction	ORNL	5700	3	2	2	S	U
Fabrication	SE140-054						