NEXT ASS'Y: FINAL ASS'Y:

NOTES:

1. INTERPRET DIMENSIONS AND TOLERANCES PER ANSI Y14.5M
2. DIMENSIONS ARE IN INCHES
3. DIMENSIONS APPLY AT ROOM TEMPERATURE, OPERATING TEMP 80 K
4. GEOMETRY IS DEFINED IN PRO ENGINEER CAD MODELS/FILES
5. DRAWING AND MODELS COMBINED DEFINE FINISHED MACHINED PART

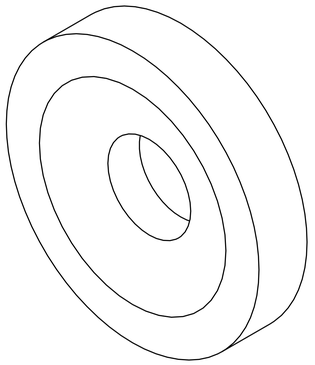

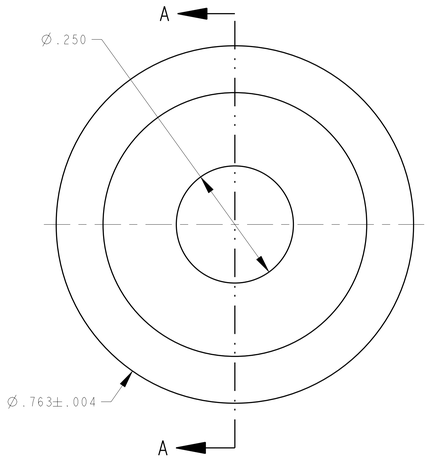

1

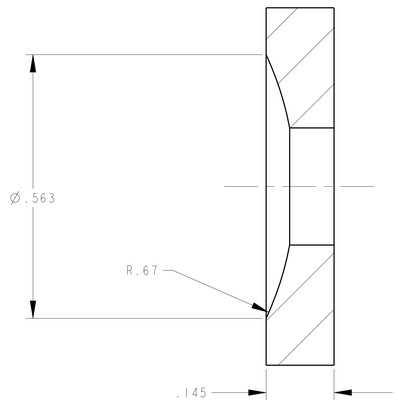

SECTION A-A

RELEASED FOR FABRICATION / INSTALLATION

	AR		SE1405-262P	PISTON, SPHERICAL, CONCAVE	A286 SUPERALLOY	--	1
SE1405-250		CAGE CODE	PART OR IDENTIFYING NO	NOMENCLATURE OR DESCRIPTION	MATERIAL	SPECIFICATION	FIND NO
		NEXT ASSEMBLY			PARTS LIST		

SE1405-262P

B

NO REPRESENTATION OR WARRANTY, EXPRESSED OR IMPLIED, IS MADE AS TO THE ACCURACY, COMPLETENESS OR USEFULNESS OF THE INFORMATION OR STATEMENTS CONTAINED IN THESE DRAWINGS, OR THAT THE USE OR DISCLOSURE OF ANY INFORMATION, APPARATUS, METHOD OR PROCESS DISCLOSED IN THESE DRAWINGS MAY NOT INFRINGE PRIVATE RIGHTS OF OTHERS. NO LIABILITY IS ASSUMED WITH RESPECT TO THE USE OF, OR FOR DAMAGES RESULTING FROM THE USE OF, ANY INFORMATION, APPARATUS, METHOD OR PROCESS DISCLOSED IN THESE DRAWINGS. DRAWINGS MADE AVAILABLE FOR INFORMATION TO BIDDER ARE NOT TO BE USED FOR OTHER PURPOSES, AND ARE TO BE RETURNED UPON REQUEST OF THE FORWARDING CONTRACTOR.

P THIS DRAWING PRODUCED ON PRO-ENGINEER

REV	DESCRIPTION	BY	DATE	CHK	DEPT	DATE	PE	REQ	DATE	ORNL	DOE	DATE
	REVISION OR ISSUE PURPOSE	REVISION APPROVAL										

SCALE 8

TOLERANCES UNLESS OTHERWISE SPECIFIED

FRACTIONS ±
XX DECIMALS ±.01
XXX DECIMALS ±.005
ANGLES ±0°15'
BREAK SHARP EDGES .06 MAX
FINISH .125 UNLESS OTHERWISE SPECIFIED

DES	PAUL MILLER	4-12-04
DRW	PAUL MILLER	4-15-04
CHK	Doug Sparks 2004.05.27 07:44:22 -04'00'	
SECT		
DEPT		
PE	David Williamson 2004.05.27 07:44:58 -04'00'	
CR		
PJ		
REQ		
PPPL DRFT	Jerry Siegel 2004.05.18 09:08:18 -04'00'	

DRAWING APPROVALS DATE

UT-BATTELLE

Oak Ridge National Laboratory
managed for the DEPARTMENT OF ENERGY under
U.S. GOVERNMENT contract DE-AC05-000R22725
UT-BATTELLE, LLC. Oak Ridge, Tennessee

PROJECT TITLE
NATIONAL COMPACT STELLARATOR EXPERIMENT

PISTON, SPHERICAL, CONCAVE

VERSION NO.	PLANT	BLDG	FL	SHT	OF	TYPE	CLASS
3	X-10	5700	3	1	1	S	U

RELEASE LEVEL		REV
Fabrication	SE1405-262P	0