NOTES

1. DRAWING PREPARED IN ACCORDANCE WITH ASME Y14.100-2004.
2. INTERPRET DIMENSIONS AND TOLERANCES PER ASME Y14.5M-1994.
3. DIMENSIONS ARE IN INCHES
4. HOLE DIMENSIONS ARE BASED ON SETTING UP ON THE MACHINE COORDINATE SYSTEM USING THE FIDUCIALS ON SE141-116

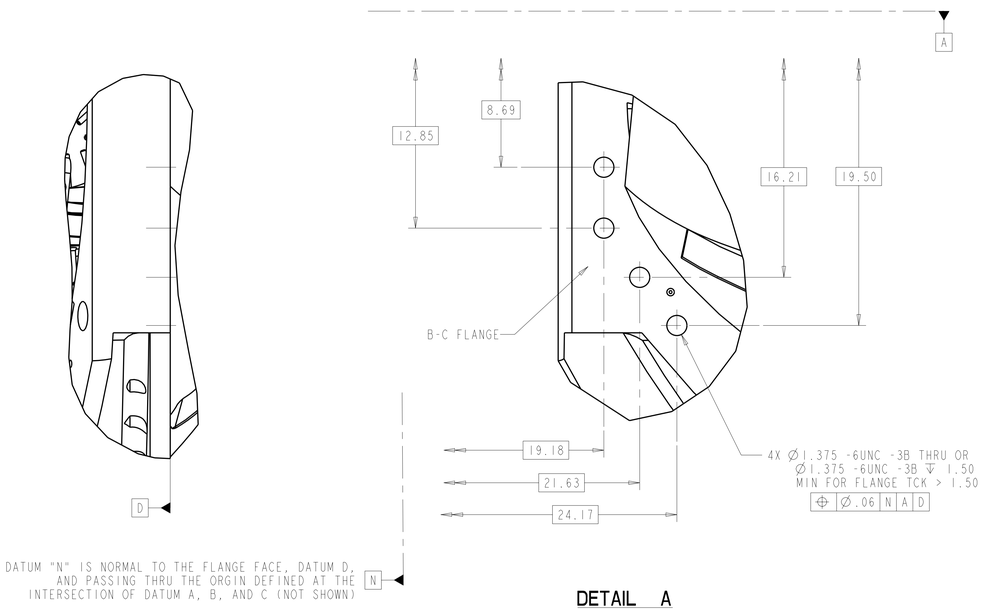

DETAIL A
SCALE 0.250

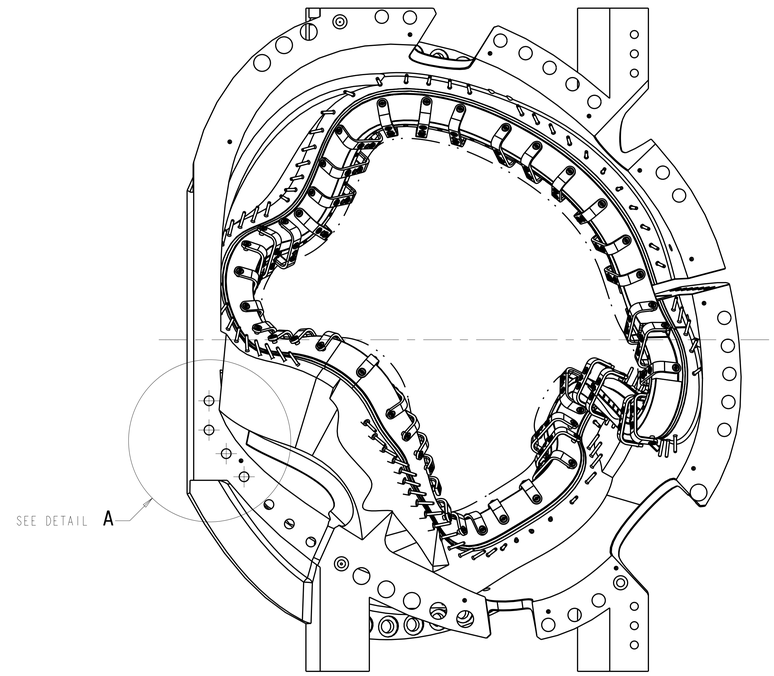

TYPE C WINDING FORM VIEW OF B-C FLANGE, DATUM D
MAY BE PART ONLY OR PARTIALLY ASSEMBLIED
SCALE 0.12

RELEASED FOR FABRICATION / INSTALLATION
PPPL Drafting: Jerry Siegel 2007.04.04 08:54:21 -05'00'

REFERENCE MODEL FOR THIS DRAWING IS SE141-116

NO REPRESENTATION OR WARRANTY,EXPRESSED OR IMPLIED,IS MADE AS TO THE ACCURACY, COMPLETENESS OR USEFULNESS OF THE INFORMATION OR STATEMENTS CONTAINED IN THESE DRAWINGS, OR THAT THE USE OR DISCLOSURE OF ANY INFORMATION, APPARATUS, METHOD OR PROCESS DISCLOSED IN THESE DRAWINGS MAY NOT INFRINGE PRIVATE RIGHTS OF OTHERS. NO LIABILITY IS ASSUMED WITH RESPECT TO THE USE OF, OR FOR DAMAGES RESULTING FROM THE USE OF, ANY INFORMATION, APPARATUS, METHOD OR PROCESS DISCLOSED IN THESE DRAWINGS. DRAWINGS MADE AVAILABLE FOR INFORMATION TO BIDDER ARE NOT TO BE USED FOR OTHER PURPOSES, AND ARE TO BE RETURNED UPON REQUEST OF THE FORWARDING CONTRACTOR.

P THIS DRAWING PRODUCED ON PRO-ENGINEER

REV	DESCRIPTION (REVISION OR ISSUE PURPOSE)	BY	DATE	CHK	DEPT	DATE	PE	REQ	DATE	ORNL	DOE	DATE
0	ORIGINAL ISSUE	GM	04/07									

SCALE NOTED

TOLERANCES UNLESS OTHERWISE SPECIFIED
FRACTIONS ±
XX DECIMALS ±.01
XXX DECIMALS ±.005
ANGLES ±0°15'
BREAK SHARP EDGES .06 MAX
FINISH .125 UNLESS OTHERWISE SPECIFIED

DRAWING APPROVALS		DATE
DES	D WILLIAMSON	04/07
DRW	G MCGINNIS	04/07
CHK	M J COLE	04/07
SECT	:	:
DEPT	:	:
PE	:	:
CR	:	:
PJ	:	:
REQ	:	:
PPPL DRFT	J SIEGEL	04/07
	:	:
	:	:

UT-BATTELLE
Oak Ridge National Laboratory
managed for the DEPARTMENT OF ENERGY under
U.S. GOVERNMENT contract DE-AC05-000R22725
UT-BATTELLE, LLC. Oak Ridge, Tennessee

PROJECT NAME: NATIONAL COMPACT STELLARATOR EXPERIMENT

TYPE C WINDING FORM
MODIFIED TO ADD INNER HOLES

VERSION NO.	PLANT	BLDG	FL	SHT	OF	TYPE	CLASS
3	ORNL	5700	3	1	1	S	U

RELEASE LEVEL: Fabrication
SE141-146
REV 0

SE141-146