NOTES

1. DRAWING PREPARED IN ACCORDANCE WITH ASME Y14.100-2004.
2. INTERPRET DIMENSIONS AND TOLERANCES PER ASME Y14.5M-1994.
3. DIMENSIONS ARE IN INCHES
4. HOLE DIMENSIONS ARE BASED ON SETTING UP ON THE MACHINE COORDINATE SYSTEM USING THE FIDUCIALS ON SE141-116.

   IF TEMPLATE IS USED IT SHOULD BE VERIFIED BY METROLOGY PRIOR TO DRILLING.

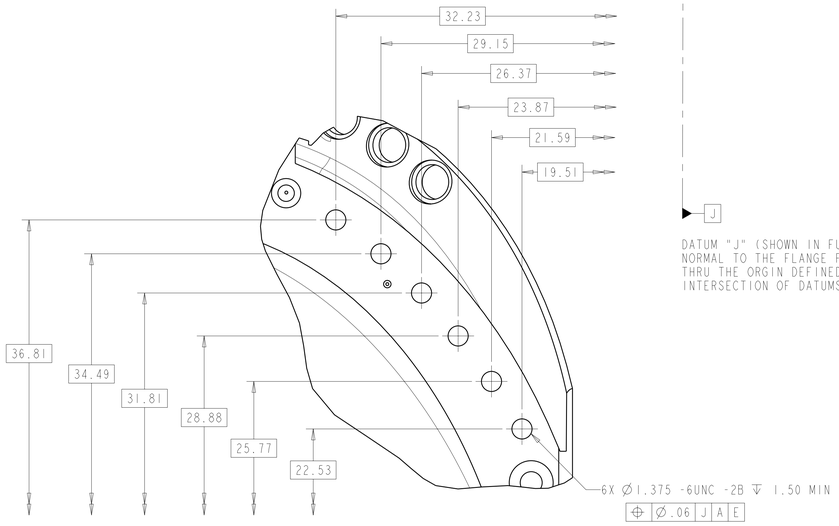

DATUM "J" (SHOWN IN FULL VIEW) IS NORMAL TO THE FLANGE FACE PASSING THRU THE ORGIN DEFINED AT THE INTERSECTION OF DATUMS A, B, AND C

DETAIL A 4

SCALE 0.25

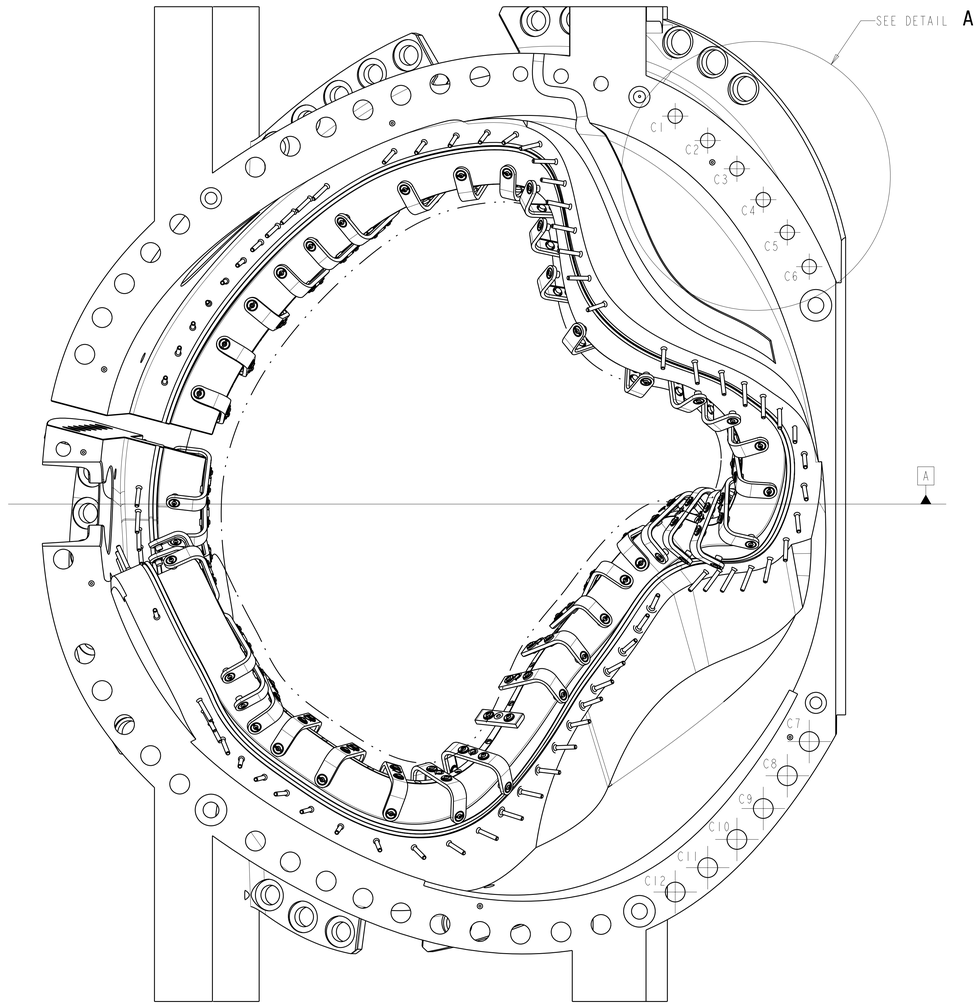

TYPE C WINDING FORM VIEW OF C-C FLANGE

MAY BE PART ONLY OR PARTIALLY ASSEMBLIED

SCALE 0.18

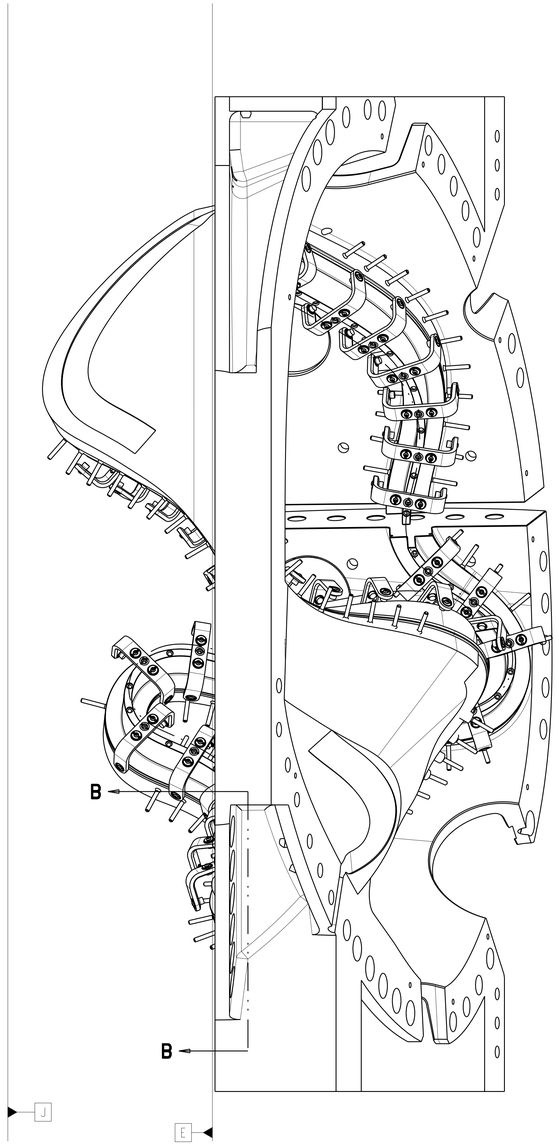

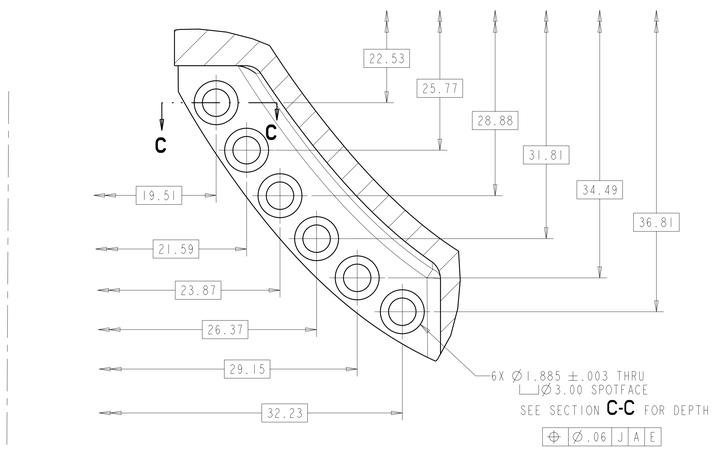

SECTION B-B 4

SCALE 0.25

DATUM "J" (SHOWN IN FULL VIEW) IS NORMAL TO THE FLANGE FACE PASSING THRU THE ORGIN DEFINED AT THE INTERSECTION OF DATUMS A, B, AND C

RELEASED FOR FABRICATION / INSTALLATION
PPPL Drafting: Jerry Siegel 2007.08.04 08:03:21 -05'00'

-1 TYPE C WF MODIFIED TO ADD INNER HOLES

SCALE NOTED

	-1	TYPE C WINDING FORM MODIFIED TO ADD INNER HOLES	REF MODEL SE141-116			1
-1	CAGE CODE	PART OR IDENTIFYING NO	NOMENCLATURE OR DESCRIPTION	MATERIAL	SPECIFICATION	FIND NO
		NEXT ASSEMBLY	PARTS LIST			

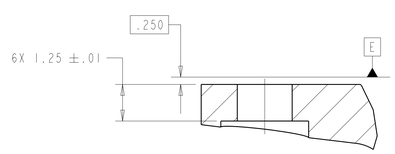

SECTION C-C

SCALE 0.50

REV	DESCRIPTION	BY	DATE	CHK	DEPT	DATE	PE	REQ	DATE	ORNL	DOE	DATE
0	ORIGINAL ISSUE	SH	08/07									

REVISION OR ISSUE PURPOSE — REVISION APPROVAL

SCALE NOTED

TOLERANCES UNLESS OTHERWISE SPECIFIED
FRACTIONS ±
XX DECIMALS ±.01
XXX DECIMALS ±.005
ANGLES ±0° 15'
BREAK SHARP EDGES .06 MAX
FINISH 125 UNLESS OTHERWISE SPECIFIED

DES	D WILLIAMSON	08/2007
DRW	S HOMESCU	08/2007
CHK	M COLE	08/2007
SECT	:	:
DEPT	:	:
PE	:	:
CR	:	:
PJ	:	:
REQ	:	:
PPPL DRFT	J SIEGEL	08/2007
	:	:
	:	:

DRAWING APPROVALS — DATE

UT-BATTELLE

Oak Ridge National Laboratory
managed for the DEPARTMENT OF ENERGY under
U.S. GOVERNMENT contract DE-AC05-00OR22725
UT-BATTELLE, LLC. Oak Ridge, Tennessee

PROJECT NAME: NATIONAL COMPACT STELLARATOR EXPERIMENT

TYPE C WINDING FORM MODIFIED TO ADD INNER HOLES

VERSION NO.	PLANT	BLDG	FL	SHT	OF	TYPE	CLASS
9	ORNL	5700	3	1	2	S	U

RELEASE LEVEL: Fabrication — SE141-148 — REV 0

NO REPRESENTATION OR WARRANTY,EXPRESSED OR IMPLIED,IS MADE AS TO THE ACCURACY, COMPLETENESS OR USEFULNESS OF THE INFORMATION OR STATEMENTS CONTAINED IN THESE DRAWINGS, OR THAT THE USE OR DISCLOSURE OF ANY INFORMATION, APPARATUS, METHOD OR PROCESS DISCLOSED IN THESE DRAWINGS MAY NOT INFRINGE PRIVATE RIGHTS OF OTHERS. NO LIABILITY IS ASSUMED WITH RESPECT TO THE USE OF, OR FOR DAMAGES RESULTING FROM THE USE OF, ANY INFORMATION, APPARATUS, METHOD OR PROCESS DISCLOSED IN THESE DRAWINGS. DRAWINGS MADE AVAILABLE FOR INFORMATION TO BIDDER ARE NOT TO BE USED FOR OTHER PURPOSES, AND ARE TO BE RETURNED UPON REQUEST OF THE FORWARDING CONTRACTOR.

P THIS DRAWING PRODUCED ON PRO-ENGINEER

SE141-148

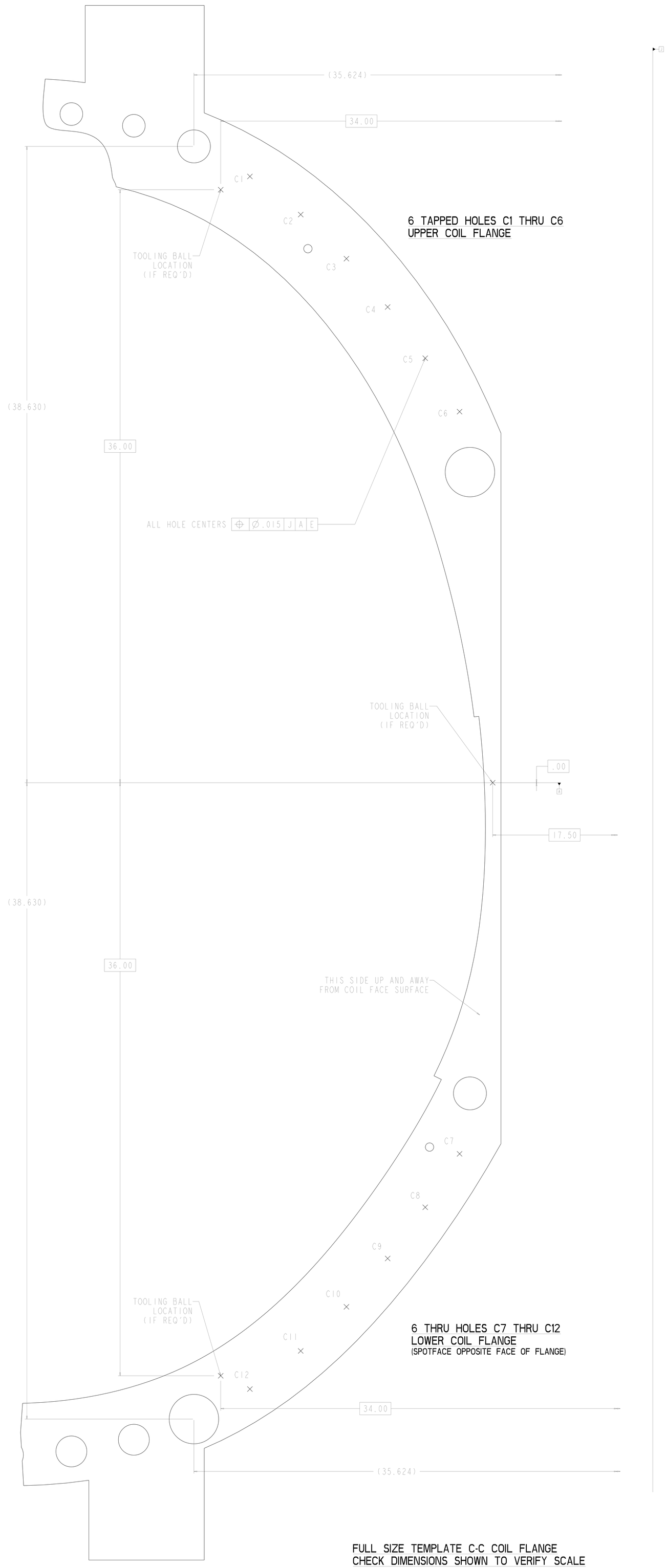

FULL SIZE TEMPLATE C-C COIL FLANGE
CHECK DIMENSIONS SHOWN TO VERIFY SCALE