NO.	REVISION	BY	CH	SUP	APPROVED	DATE
1	REVISED PER ECN-5028	LM	TB	JS	T.BROWN	10-18-05
2	REVISED PER ECN-5077	LM	TB	JS	T.BROWN	2-16-06
3	REVISED PER ECN-5099	LM	TB	JS	T. BROWN	3-29-06

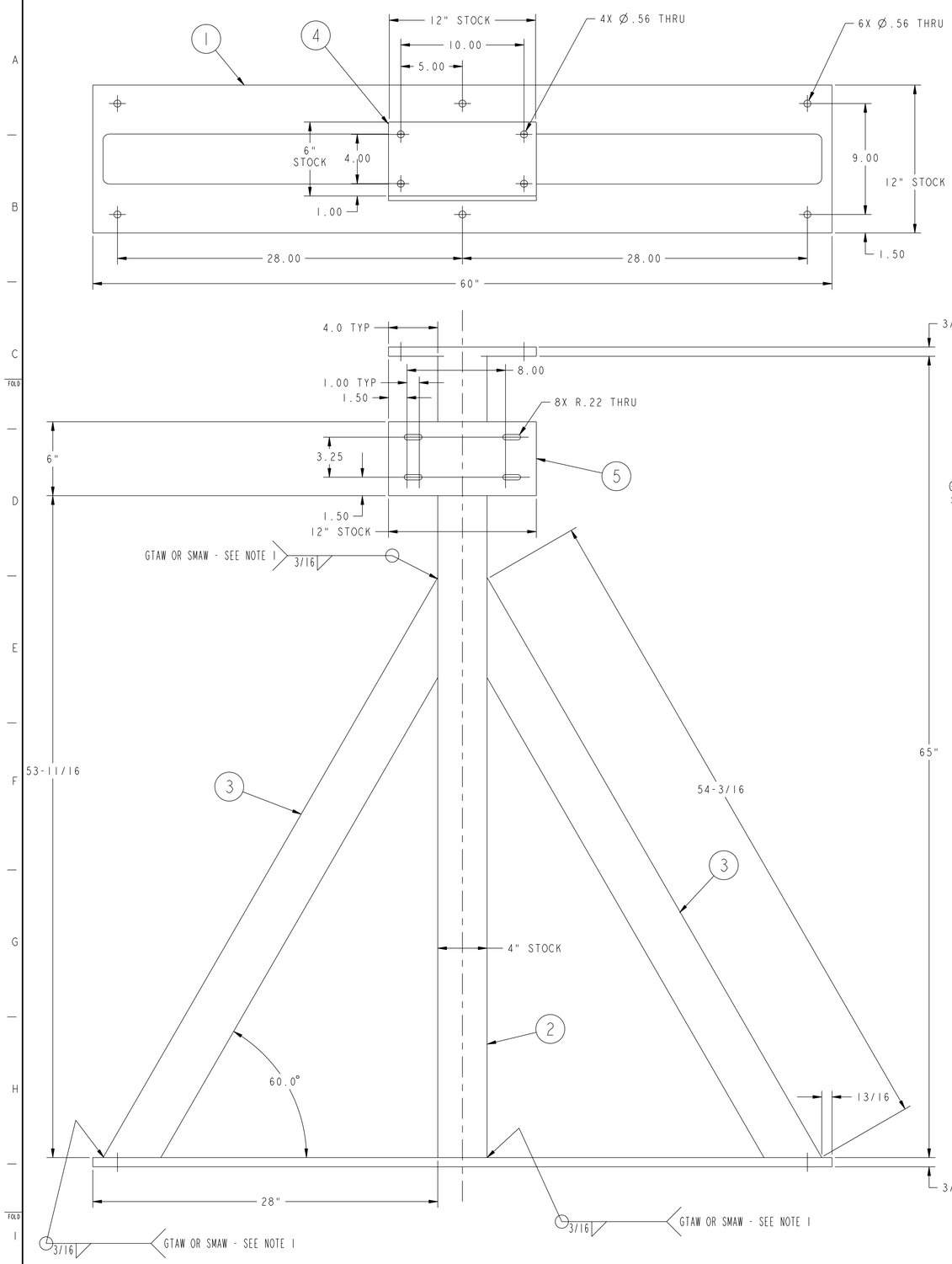

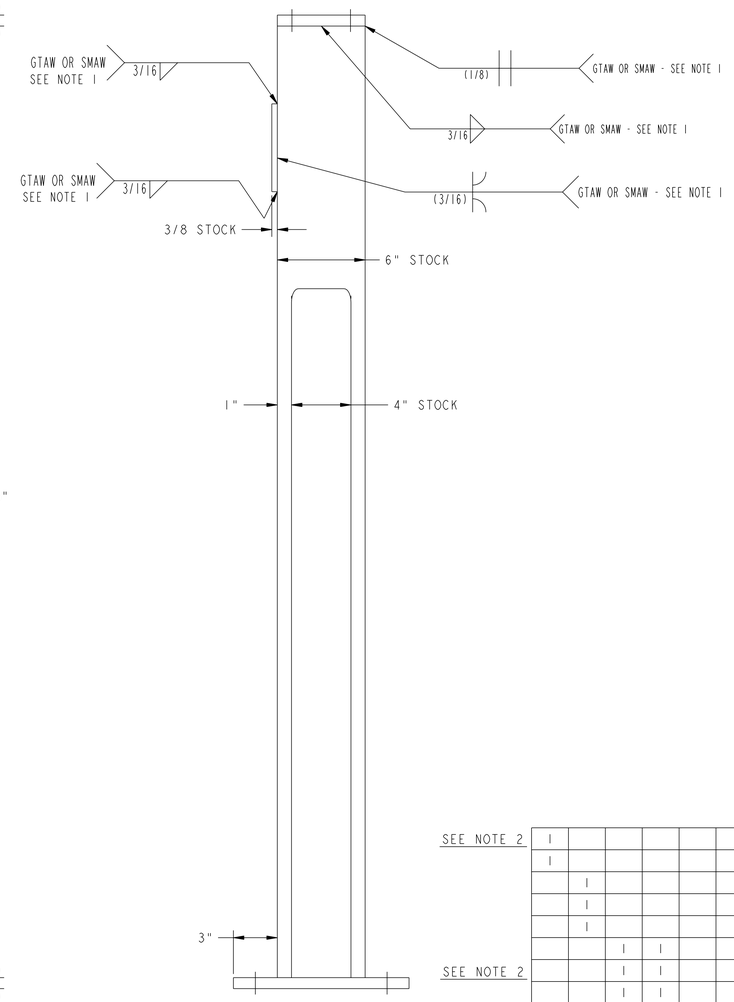

NOTES

1. WELDING SHALL BE PERFORMED IN ACCORDANCE WITH THE REQUIREMENTS OF AWS D1.1 AND AWS D1.3 AS APPLICABLE. WELDING PERFORMED BY PPPL SHALL ALSO MEET THE REQUIREMENTS OF PPPL PROCEDURE ENG-037. VISUAL WELD INSPECTION SHALL BE PERFORMED IN ACCORDANCE WITH THE ACCEPTANCE CRITERIA OF AWS D1.1 Section 6 AND AWS D1.3 AS APPLICABLE.
2. ASTM A513 TUBING SHALL BE CARBON STEEL GRADE 1010-1020.

RELEASED FOR FABRICATION / INSTALLATION
PPPL Drafting ? Jerry Siegel 2006.03.30 11:11:42 -05'00'

01 ASSEMBLY SUPPORT STAND WELDMENT - WITH BRACKET

	06 ASSY	05 ASSY	04 ASSY	03 ASSY	02 ASSY	01 ASSY	PART NO.	DRAWING NO.	NOMENCLATURE OR DESCRIPTION	MATERIAL	QTY REQD
SEE NOTE 2	1						15	THIS DWG	WORM GEAR AXLE - Ø1 1/2 O.D. TUBE x 5/16 WALL	ASTM A513	
	1						14	THIS DWG	WORM GEAR AXLE BASE FLANGE	ASTM A36	
		1					13	THIS DWG	SUPPORT BRACKET GUSSET	ASTM A36	
		1					12	THIS DWG	SUPPORT BRACKET TOP PLATE	ASTM A36	
		1					11	THIS DWG	SUPPORT BRACKET SIDE PLATE	ASTM A36	
			1	1			10	THIS DWG	SUPPORT AXLE CAP	ASTM A36	
SEE NOTE 2			1	1			9	THIS DWG	SUPPORT AXLE - Ø5.50 O.D. TUBE x .1/2 WALL	ASTM A513	
			1	1			8	THIS DWG	SUPPORT AXLE BASE FLANGE	ASTM A36	
					1		7	THIS DWG	OUTRIGGER BASE PLATE	ASTM A36	
					1		6	THIS DWG	OUTRIGGER - 4" x 4" x 1/4" STRUCT TUBING	ASTM A36	
						1	5	THIS DWG	WORM SUPPORT BRACKET MOUNTING PLATE	ASTM A36	
					1	1	4	THIS DWG	SUPPORT STAND TOP PLATE	ASTM A36	
					2	2	3	THIS DWG	SUPPORT STAND BRACE - 4" x 4" x 1/4" STRUCT TUBING	ASTM A36	
					1	1	2	THIS DWG	SUPPORT STAND UPRIGHT - 6" x 4" X 1/4" STRUCT TUBING	ASTM A36	
					1	1	1	THIS DWG	SUPPORT STAND BASE PLATE	ASTM A36	
	X						—	THIS DWG	WORM GEAR AXLE WELDMENT	—	1
		X					—	THIS DWG	WORM SUPPORT BRACKET WELDMENT	—	1
			X				—	THIS DWG	SUPPORT AXLE WELDMENT - TYPE "B"	—	1
				X			—	THIS DWG	SUPPORT AXLE WELDMENT - TYPE "A"	—	1
					X		—	THIS DWG	SUPPORT STAND WELDMENT - WITH OUTRIGGER	—	1
						X	—	THIS DWG	SUPPORT STAND WELDMENT - WITH BRACKET	—	1

PARTS LIST

NCSX-SE184-002

RELEASE LEVEL: Fabrication
DWG VERSION NO: 0

WEIGHT 295.2 lbs
MODEL NAME ~~SEE18844-00002-10V2~~
WELDING ENGINEER L. DUDEK 10-18-05

COMPUTER GENERATED DRAWING MANUAL CHANGES NOT PERMITTED
Pro E
DO NOT VERIFY INFORMATION BY SCALING DRAWING
NEXT ASSEMBLY

CENTRAL FILES: UNLESS OTHERWISE SPECIFIED
DIMENSIONS ARE IN INCHES MACHINE SURFACES 125
BREAK SHARP EDGES .005/.020
TOLERANCES NON-CUMULATIVE

DECIMAL-INCH	FRACTIONS
.X +/-.100	0"-12" +/-1/16
.XX +/-.030	12"-72" +/-1/8
.XXX +/-.005	72"-120" +/-1/4
ANGULAR+/-0°-15'	OVER 120"+/-1/2

PRINCETON PLASMA PHYSICS LABORATORY
PRINCETON UNIVERSITY
NATIONAL COMPACT STELLARATOR EXPERIMENT
EXTERNAL FLUX LOOPS
VACUUM VESSEL SUPPORT STAND FIXTURE ASSEMBLY
WELDMENTS AND DETAILS

DSN: L. MORRIS	9-28-05	DRAWING NO:
CHK: T. BROWN	9-28-05	SE184-002
ENGR: T. BROWN	9-28-05	
SUPV: J. SIEGEL	9-28-05	SHEET 1 OF 3 REV 3

NCSX_ASSY_FORMAT_E

NO.	REVISION	BY	CH	SUP	APPROVED	DATE

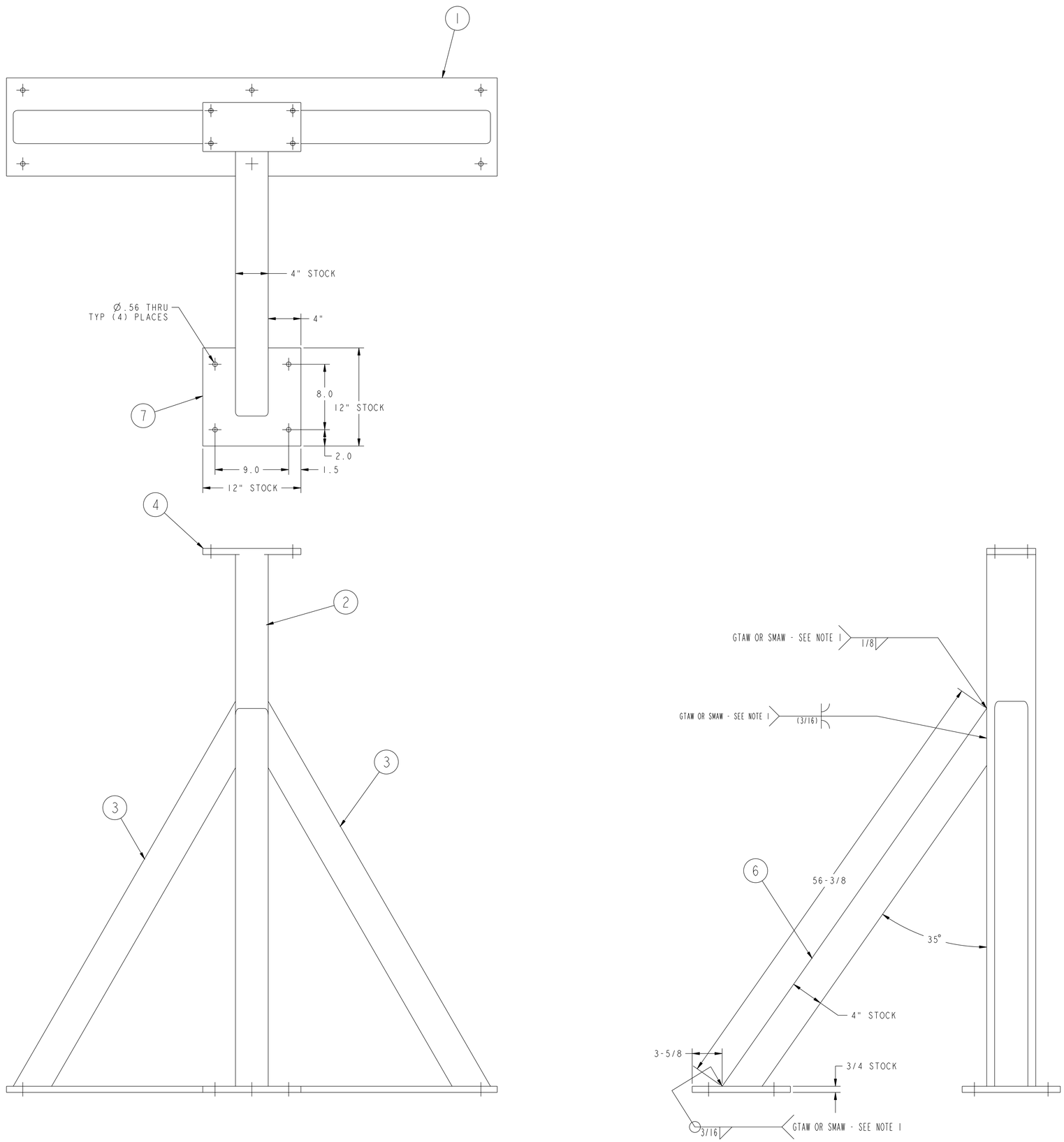

02 ASSEMBLY SUPPORT STAND WELDMENT - WITH OUTRIGGER

REFER TO 01 ASSEMBLY FOR DIMENSIONS AND WELDMARKS NOT SHOWN HERE

RELEASED FOR FABRICATION / INSTALLATION

PPPL Drafting: Jerry Siegel 2006.03.30 11:11:42 -05'00'

FOR BILL OF MATERIAL AND NOTES SEE SHEET 1

COMPUTER GENERATED DRAWING MANUAL CHANGES NOT PERMITTED	CENTRAL FILES: UNLESS OTHERWISE SPECIFIED	PRINCETON PLASMA PHYSICS LABORATORY PRINCETON UNIVERSITY NATIONAL COMPACT STELLARATOR EXPERIMENT	
Pro E	DIMENSIONS ARE IN INCHES MACHINE SURFACES 32	EXTERNAL FLUX LOOPS VACUUM VESSEL SUPPORT STAND FIXTURE ASSEMBLY WELDMENTS AND DETAILS	
DO NOT VERIFY INFORMATION BY SCALING DRAWING	BREAK SHARP EDGES .005/.020		
	TOLERANCES NON-CUMULATIVE	DSN: L. MORRIS 9-28-05	DRAWING NO:
NEXT ASSEMBLY	DECIMAL-INCH: .X +/-.100; .XX +/-.030; .XXX +/-.005; ANGULAR +/-0°-15' / FRACTIONS: 0"-12" +/-1/16; 12"-72" +/-1/8; 72"-120" +/-1/4; OVER 120" +/-1/2	CHK: T. BROWN 9-28-05	SE184-002
		ENGR: T. BROWN 9-28-05	
		SUPV: J. SIEGEL 9-28-05	SHEET 2 OF 3 REV 3

WEIGHT	
333.0 lbs	
MODEL NAME	
SE184-002-09	
WELDING ENGINEER	L. DUDEK 10-18-05

RELEASE LEVEL: Fabrication
DWG VERSION NO: 0

NCSX_ASSY_FORMAT_E

NCSX-SE184-002

NO.	REVISION	BY	CH	SUP	APPROVED	DATE

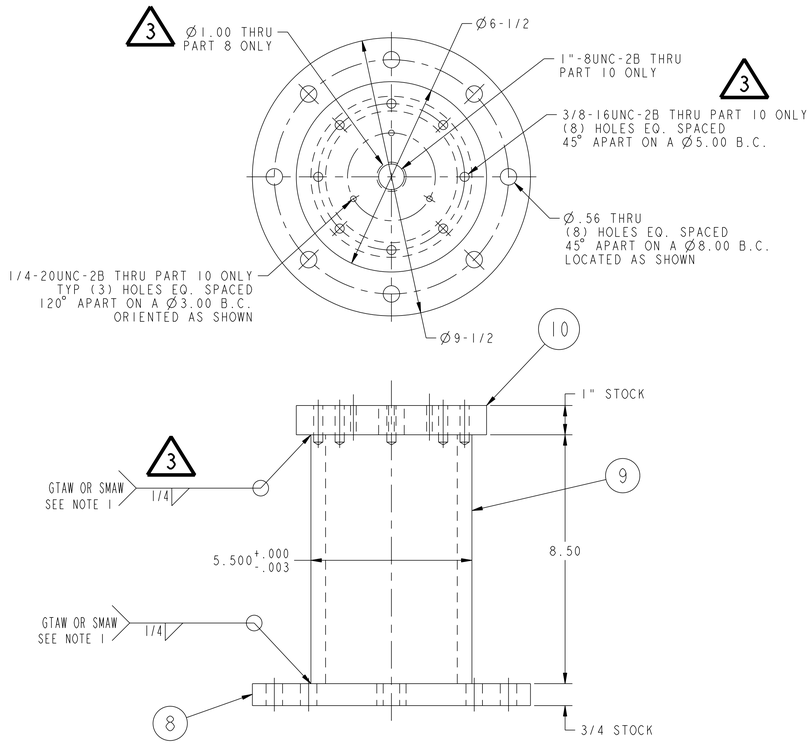

03 ASSEMBLY SUPPORT AXLE WELDMENT - TYPE "A"

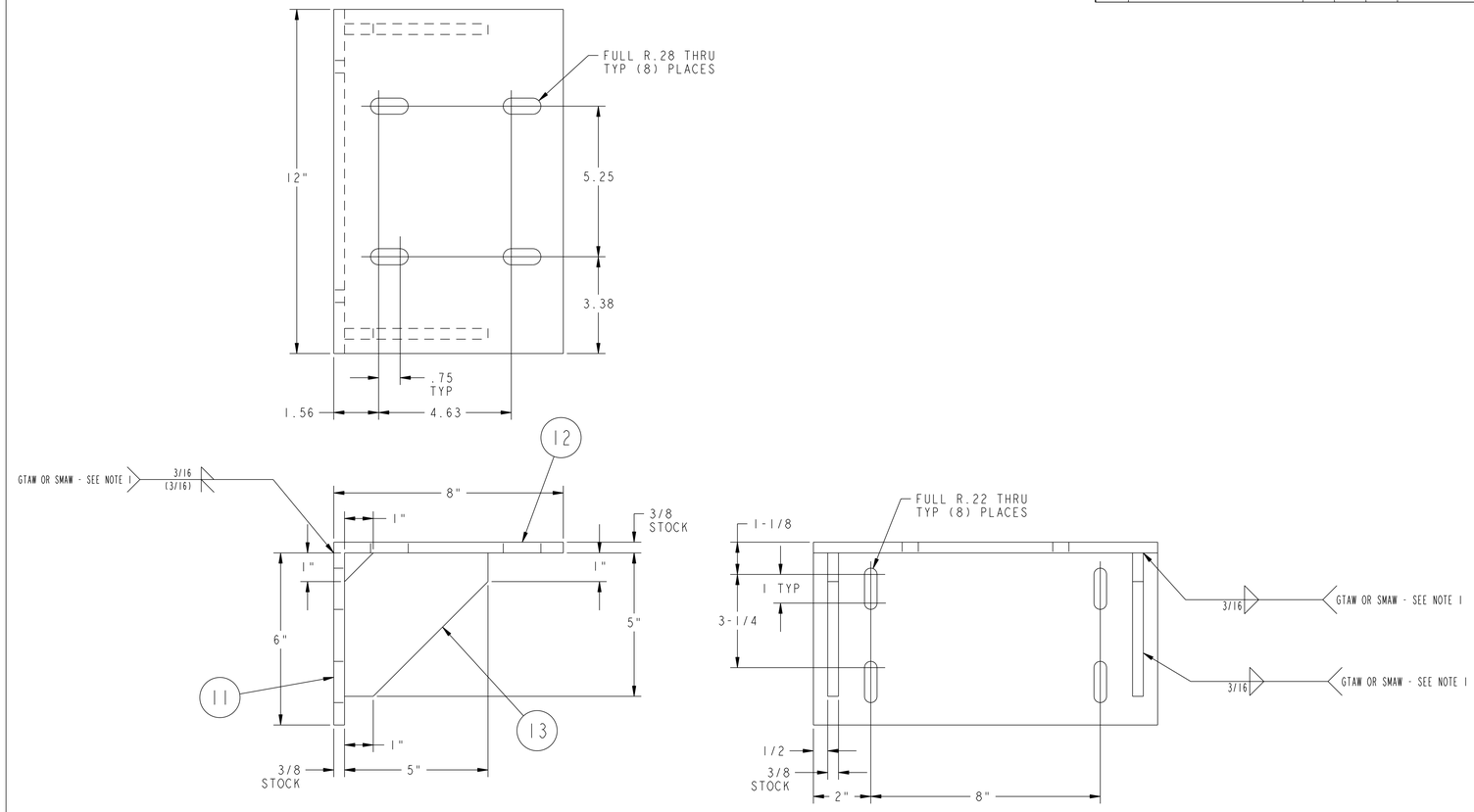

05 ASSEMBLY WORM SUPPORT BRACKET WELDMENT

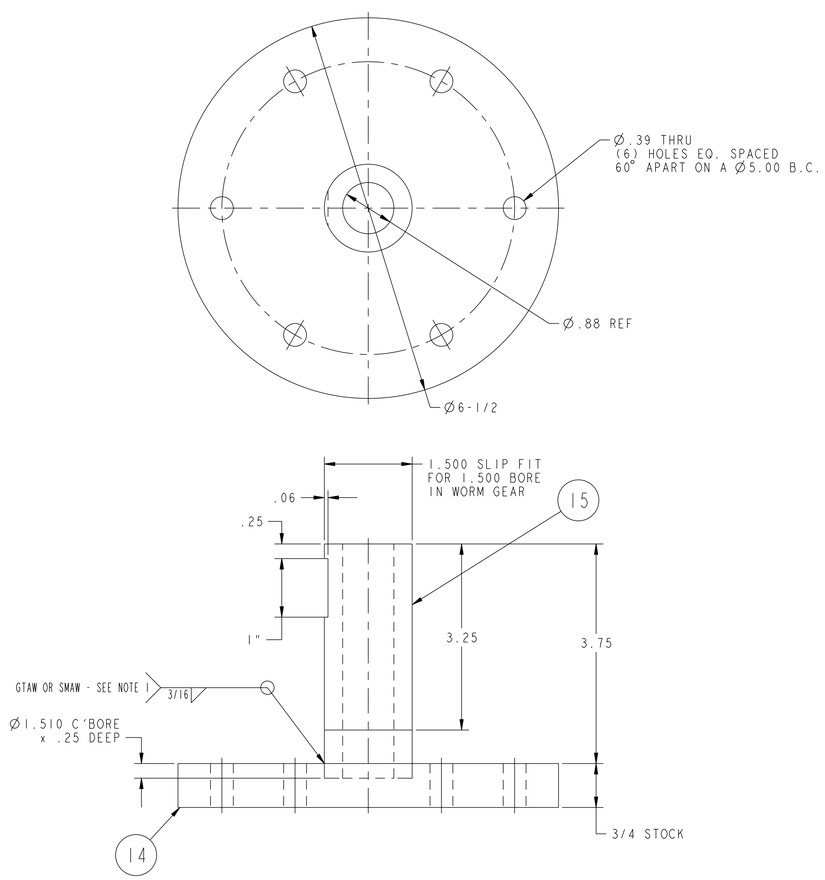

06 ASSEMBLY WORM GEAR AXLE WELDMENT

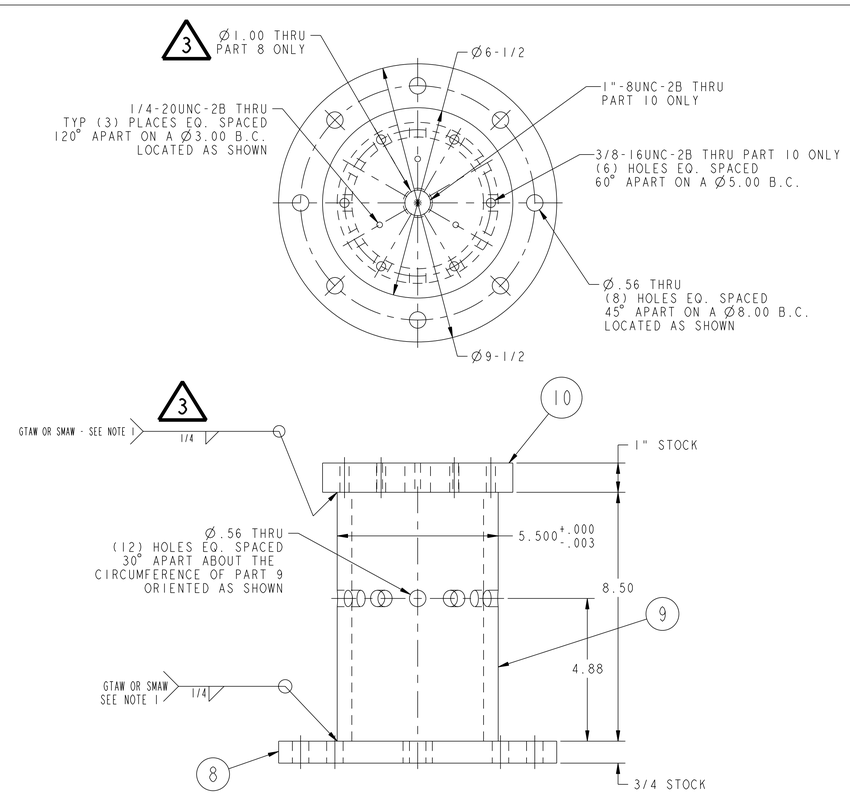

04 ASSEMBLY SUPPORT AXLE WELDMENT - TYPE "B"

RELEASED FOR FABRICATION / INSTALLATION
PPPL Drafting: Jerry Siegel 2006.03.30 11:11:42 -05'00'

FOR NOTES AND BILL OF MATERIAL SEE SHEET 1

RELEASE LEVEL: Fabrication	WEIGHT *** lbs	COMPUTER GENERATED DRAWING MANUAL CHANGES NOT PERMITTED	CENTRAL FILES: UNLESS OTHERWISE SPECIFIED
DWG VERSION NO: 0	MODEL NAME SE184-002-02	Pro E	DIMENSIONS ARE IN INCHES MACHINE SURFACES
	WELDING ENGINEER L. DUDEK 10-18-05	DO NOT VERIFY INFORMATION BY SCALING DRAWING	BREAK SHARP EDGES .005/.020
		NEXT ASSEMBLY	TOLERANCES NON-CUMULATIVE

DECIMAL-INCH		FRACTIONS	
.X	+/-.100	0"-12"	+/-1/16
.XX	+/-.030	12"-72"	+/-1/8
.XXX	+/-.005	72"-120"	+/-1/4
ANGULAR	+/-0°-15'	OVER 120"	+/-1/2

PRINCETON PLASMA PHYSICS LABORATORY
PRINCETON UNIVERSITY
NATIONAL COMPACT STELLARATOR EXPERIMENT

EXTERNAL FLUX LOOPS
VACUUM VESSEL SUPPORT STAND FIXTURE ASSEMBLY
WELDMENTS AND DETAILS

DSN: L. MORRIS	9-28-05	DRAWING NO:	
CHK: T. BROWN	9-28-05	SE184-002	
ENGR: T. BROWN	9-28-05		
SUPV: J. SIEGEL	9-28-05	SHEET 3 OF 3	REV 3

NCSX-SE184-002

NCSX_ASSY_FORMAT_E