NO.	REVISION	BY	CH	SUP	APPROVED	DATE

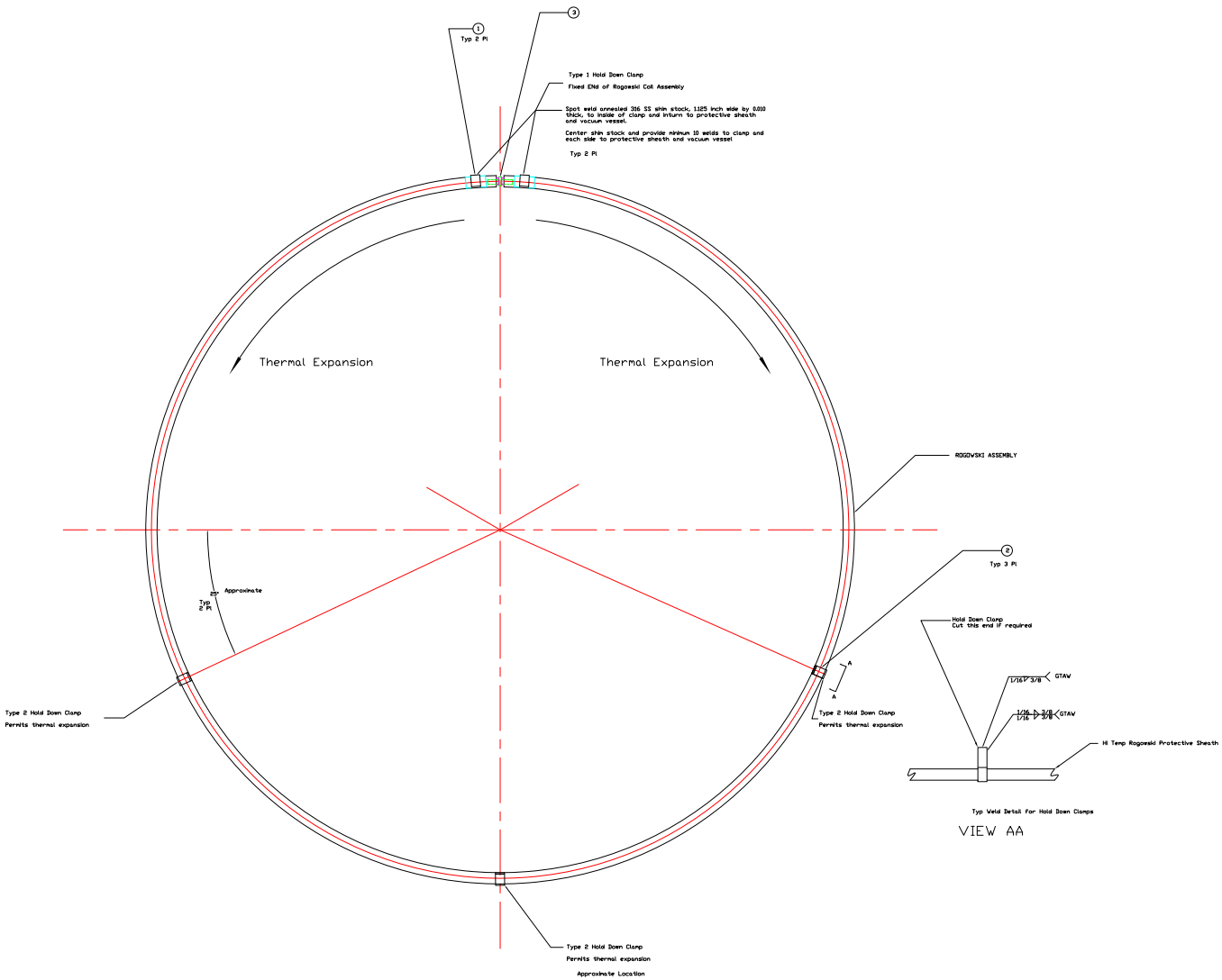

NOTES :

1. Install three Rogowski Coil Assemblies, 120 degrees apart, one on each of the 3 VV segments on the outer surface and at the weld joint. The orientation is : standing outside the machine field periods, looking at the NB port, with the vacuum vessel port S2 oriented vertically, top flange up, install on the left weld flange.

2. Add 0.010 inch thick shim stock between the Rogowski protective sheath and crossed external flux loops and spot weld to the vacuum vessel. This will act to protect the co axial cable.

3. Mandrel end fixture , one Rogowski Coil on VV1 to use Inconel with Lectrofluor PG coating (0.001 inch) by General Magnaplate and two Rogowski coils on VV2 and VV3 to use Zirconia.

4. Position mandrel ends against the dielectric end fitting

5. Per project requirements, Rogowski Coil Components, magnetic permeability <1.02

Weld Notes:

Welding shall be performed in accordance with the requirements of PPPL Procedure ENG 037.

Visual inspection shall be performed in accordance with the acceptance criteria of AWS D1.6

RELEASED FOR FABRICATION / INSTALLATION

PPPL Drafting: jerome siegel

WELDING ENGINEER

APPVD: _____ DATE: _____

APPVD: L. DUDEK DATE: 3JUN2009

		1		ROGOWSKI COIL ASSEMBLY		THIS DWG SH 1	
03	02	01	PART NO.	NOMENCLATURE OR DESCRIPTION		DRAWING NO.	MATERIAL

COMPUTER GENERATED DRAWING MANUAL CHANGES NOT PERMITTED

AutoCAD2000

DO NOT VERIFY DIMENSION BY SCALING DRAWING

CENTRAL FILES:

UNLESS OTHERWISE SPECIFIED

DIMENSIONS ARE IN INCHES MACHINE SURFACES 125

BREAK SHARP EDGES .005/.020

PRINCETON PLASMA PHYSICS LABORATORY
PRINCETON UNIVERSITY
NATIONAL COMPACT STELLARATOR EXPERIMENT

HIGH TEMPERATURE ROGOWSKI COIL

SCALE:

NEXT ASSEMBLY

TOLERANCES NON-CUMULATIVE

DECIMAL-INCH	FRACTIONS
.X ± .100	0°-12° ±1/16
.XX ± .030	12°-30° ±1/8
.XXX ± .005	30°-120° ±1/4
ANGLES ±0°-10'	OVER 120° ±1/2

DW: FOM

ENG: G.LASKE

DSN: G.LASKE

CHK: L.GUTSKOVA

DATE: JUNE2008

APPROVED: G.LASKE

CHG | SUP | | |

CAD FILE:

se 310-050

SHEET 1 OF 3

REV 0

MechEdge1

NO.	REVISION	BY	CH	SUP	APPROVED	DATE

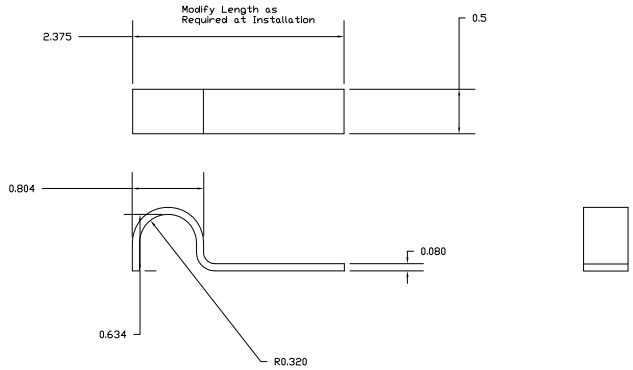

Type 2
Middle Supports

2

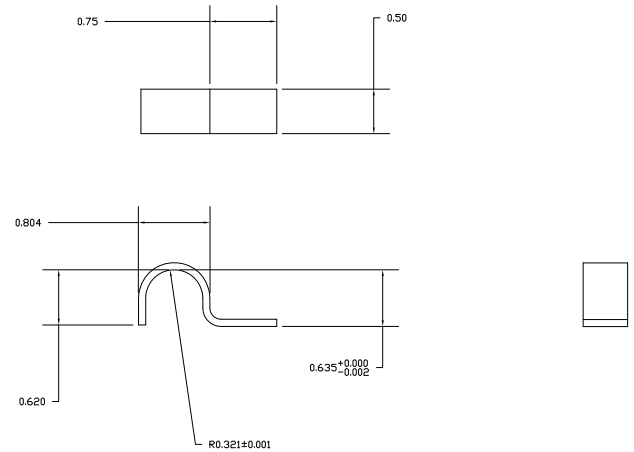

Type 1
Mandrel Ends

1

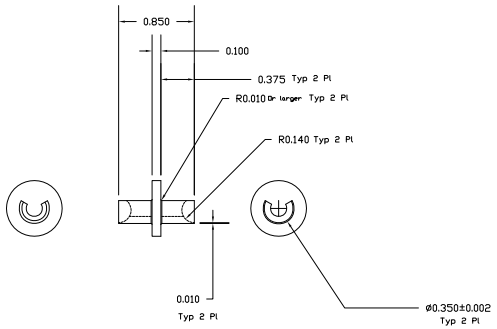

Inconel Detail

3a

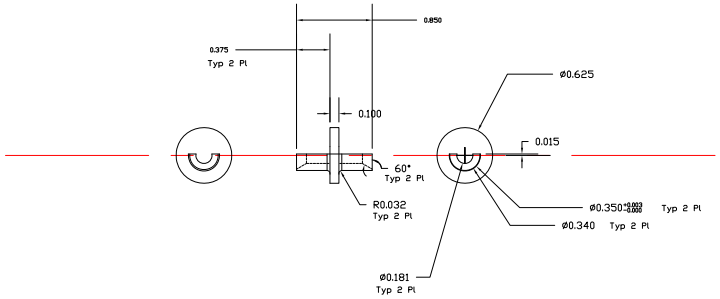

Zirconia Detail

3b

RELEASED FOR FABRICATION / INSTALLATION

PPPL Drafting: jerome siegel

		1	3a,3b	MANDREL END ALIGNING FITTING Note 3	THIS DWG SH 2	Note 3.
		3	2	HOLD DOWN CLAMP TYPE 2	THIS DWG SH 2	INCONEL 625
		2	1	FIXED END HOLD DOWN CLAMP TYPE 1	THIS DWG SH 2	INCONEL 625
		1		SUB ASSEMBLY	THIS DWG SH 2	
03	02	01	PART NO.	NOMENCLATURE OR DESCRIPTION	DRAWING NO.	MATERIAL

COMPUTER GENERATED DRAWING
MANUAL CHANGES NOT PERMITTED

AutoCAD2000

DO NOT VERIFY DIMENSION BY SCALING DRAWING

CENTRAL FILES:
UNLESS OTHERWISE SPECIFIED
DIMENSIONS ARE IN INCHES
MACHINE SURFACES 125
BREAK SHARP EDGES .005/.020

PRINCETON PLASMA PHYSICS LABORATORY
PRINCETON UNIVERSITY
NATIONAL COMPACT STELLARATOR EXPERIMENT

HIGH TEMPERATURE ROGOWSKI COIL

WELDING ENGINEER
APPVD: _____ DATE _____
APPVD: _____ DATE _____

SCALE:
NEXT ASSEMBLY

TOLERANCES NON-CUMULATIVE
DECIMAL-INCH: X ±.100; XX ±.030; XXX ±.005; ANGULAR ±0°-15'
FRACTIONS: 0°-12' ±1/16; 12°-30' ±1/8; 30°-120' ±1/4; OVER 120' ±1/2

DIV: FOM
ENG: G.LASK
DWN: G.LASK
CHK: L.GUTADORA

DATE: JUNE2008
APPROVED: G.LASK
DWG: LO
SUPV: JB

CADD FILE:
se 310-050
SHEET 2 OF 3
REV 0

MechEdge1

NO.	REVISION	BY	CH	SUP	APPROVED	DATE

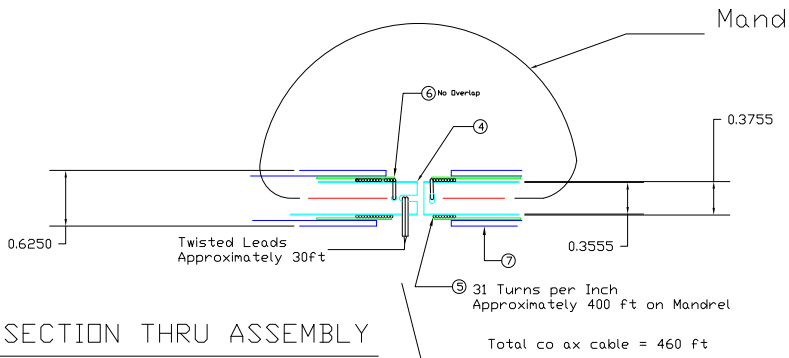

CROSS SECTION THRU ASSEMBLY

SUB ASSEMBLY

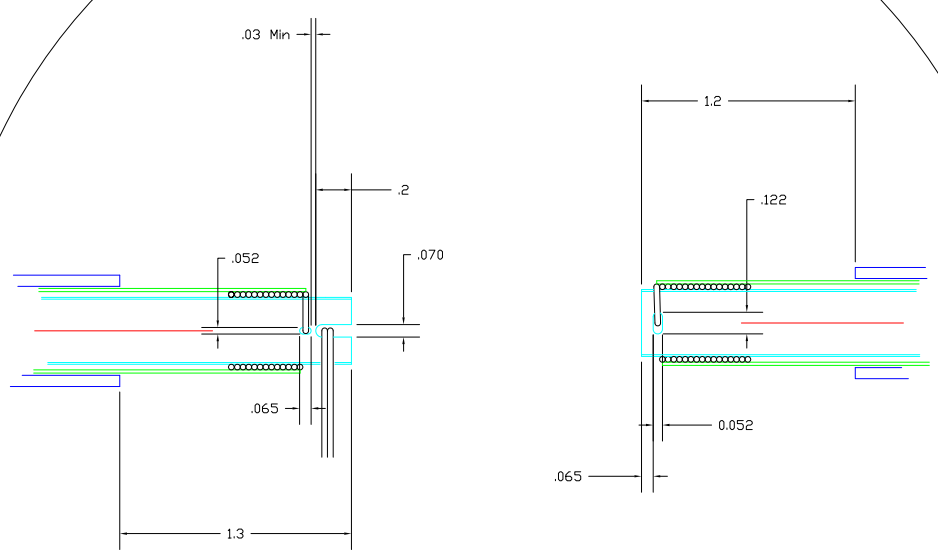

Scale Factor 2

RELEASED FOR FABRICATION / INSTALLATION

PPPL Drafting: jerome siegel

		1	7	PROTECTIVE SHEATH , ⅜ OD X ¼ ID STOCK– 117.25 INCHES	THIS DWG SH 2	316 SS–ANNEALED
		1	6	NON ADHESIVE TAPE, 1 BY 0.015–20 FT	THIS DWG SH 2	NOMEX
		1	5	AIS CO 7005, CABLE, 0.032 OD , 0.008 CONDUCTOR, MgO INSULATOR – 460 FT	THIS DWG SH 2	316 SS–ANNEALED
		1	4	MANDREL , 0.375 OD BY 0.010 WALL STOCK–119.75 INCHES	THIS DWG SH 2	316 SS–ANNEALED
		1		SUB ASSEMBLY	THIS DWG SH 2	
03	02	01	PART NO.	NOMENCLATURE OR DESCRIPTION	DRAWING NO.	MATERIAL

COMPUTER GENERATED DRAWING MANUAL CHANGES NOT PERMITTED

AutoCAD2000

DO NOT VERIFY DIMENSION BY SCALING DRAWING

CENTRAL FILES:

UNLESS OTHERWISE SPECIFIED

DIMENSIONS ARE IN INCHES MACHINE SURFACES 125

BREAK SHARP EDGES .005/.020

PRINCETON PLASMA PHYSICS LABORATORY
PRINCETON UNIVERSITY
NATIONAL COMPACT STELLARATOR EXPERIMENT

HIGH TEMPERATURE ROGOWSKI COIL

SCALE:

NEXT ASSEMBLY

TOLERANCES NON–CUMULATIVE

DECIMAL–INCH	FRACTIONS
.X ± .100	0°–12° 41/8
.XX ± .030	12°–30° 41/8
.XXX ± .005	70°–120° 41/4
ANGLES ±2°–12'	OVER 120° 41/2

DIV: FOM

ENG: G.LASKI

DWN: G.LASKI

CHK: L.SUTHDORA

DATE: JUNE2008

APPROVED: G.LASKI

SHT: 10 SUPV: JS

CADD FILE:

se 310–050

SHEET 3 OF 3 REV 0

WELDING ENGINEER

APPVD: _____ DATE _____

APPVD: _____ DATE _____