NEXT ASS'Y: FINAL ASS'Y:

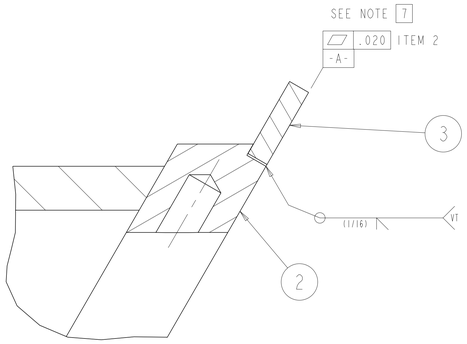

DETAIL X
SCALE 2.00

NOTES:

1. INTERPRET DIMENSIONS AND TOLERANCES PER ANSI Y14.5M.
2. DIMENSION ARE IN INCHES.
3. REQUIREMENTS FOR FABRICATING THE END PIECE ASSEMBLY SEAL WELDMENT ARE DEFINED IN THE DRAWINGS, MODELS, AND STATEMENT OF WORK NCSX-SOW-121-02.
4. GEOMETRY OF END PIECE ASSEMBLY SEAL WELDMENT IS DEFINED IN CAD MODELS/FILES SE1203-007.ASM, SE1203-003.ASM AND SE1203-016.PRT.
5. WELDING PROCEDURES AND PERFORMANCE QUALIFICATIONS SHALL BE PERFORMED IN ACCORDANCE WITH THE REQUIREMENTS OF ASME CODE, SECTION IX. WELDS MAY BE MADE BY THE GTAW OR GMAW PROCESSES. WELDS USING SMAW PROCESS ARE NOT PERMITTED.
6. WELD INSPECTIONS SHALL BE PERFORMED BY VISUAL EXAMINATION: ALL WELDS ARE TO BE VISUALLY INSPECTED IN ACCORDANCE WITH ARTICLE 9, SECTION V OF THE ASME CODE. WELDS DESIGNATED WITH A "VT" IN THE REFERENCE AREA OF A WELD SYMBOL SHALL ALSO BE VISUALLY EXAMINED WITH 8X MAGNIFICATION, IN ACCORDANCE WITH ARTICLE 6, SECTION V OF THE ASME CODE. THE ACCEPTANCE CRITERIA FOR THE VISUALLY INSPECTED WELDS IS GIVEN IN AWS D1.6, PARAGRAPH 6.29.1. ALL WELDS THAT DO NOT MEET THE STATED ACCEPTANCE CRITERIA SHALL BE DOCUMENTED, REPAIRED AND RE-INSPECTED. VISUAL WELD INSPECTION SHALL BE DONE BY INSPECTORS CERTIFIED TO PERFORM VISUAL INSPECTION OF WELDS IN ACCORDANCE WITH AWS QC1 OR SNT-TC-1A, LEVEL II OR LEVEL III.

7. FLATNESS SHOWN IS IN FREE, UNCONSTRAINED CONDITION. FLATNESS SHALL BE 0.015 WITH THE FLANGE CLAMPED DOWN TO A FLAT REFERENCE SURFACE.

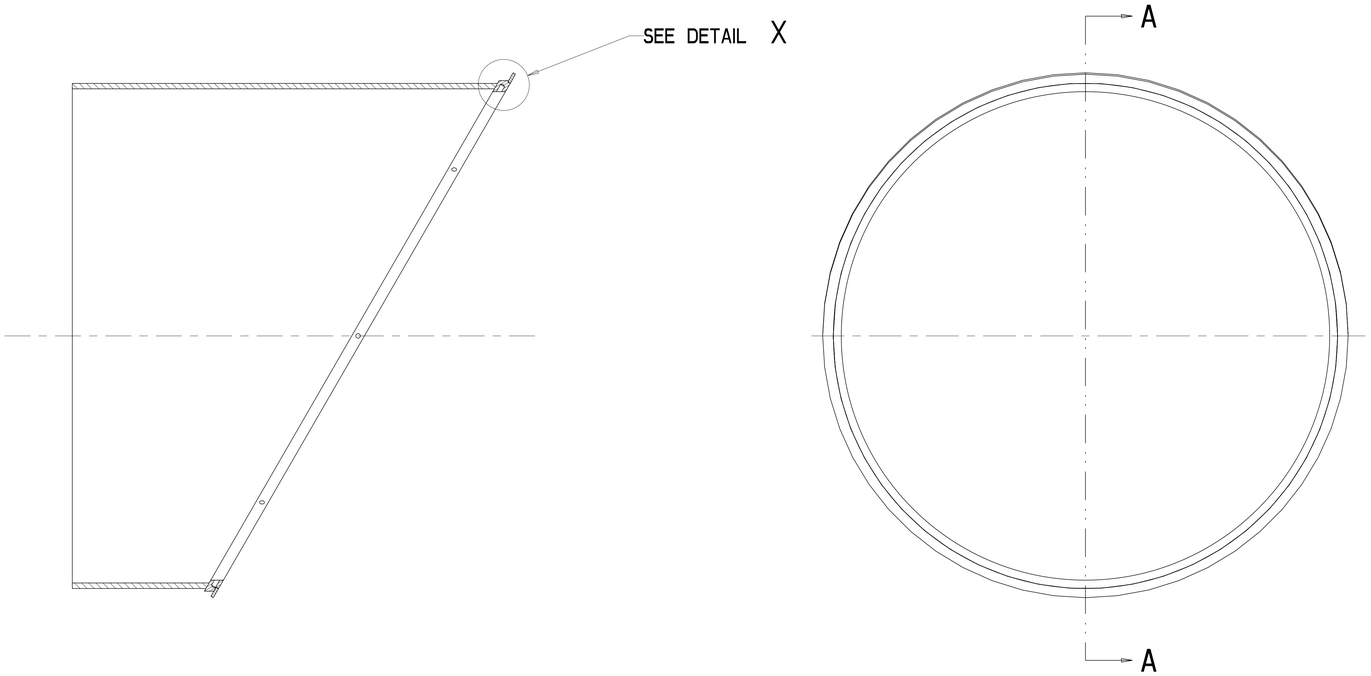

SECTION A-A
SCALE: .25

RELEASED FOR FABRICATION / INSTALLATION
PPPL Drafting: Jerry Siegel 2004.08.09 08:13:52 -05'00'

WELDING ENGINEER
APPROVED R.PARSELLS DATE: 8/3/04

next assy			CAGE CODE	PART OR IDENTIFYING NO	NOMENCLATURE OR DESCRIPTION	MATERIAL	SPECIFICATION	FIND NO
		1		SE1203-016	END PIECE SEAL			3
		1		SE1203-003	END PIECE MACHINIMG			2
	AR	X		-1	END PIECE SEAL WELDDMENT			1
SE1203-001	-1			NEXT ASSEMBLY	PARTS LIST			

SE1203-007

NO REPRESENTATION OR WARRANTY,EXPRESSED OR IMPLIED,IS MADE AS TO THE ACCURACY, COMPLETENESS OR USEFULNESS OF THE INFORMATION OR STATEMENTS CONTAINED IN THESE DRAWINGS, OR THAT THE USE OR DISCLOSURE OF ANY INFORMATION, APPARATUS, METHOD OR PROCESS DISCLOSED IN THESE DRAWINGS MAY NOT INFRINGE PRIVATE RIGHTS OF OTHERS. NO LIABILITY IS ASSUMED WITH RESPECT TO THE USE OF, OR FOR DAMAGES RESULTING FROM THE USE OF, ANY INFORMATION, APPARATUS, METHOD OR PROCESS DISCLOSED IN THESE DRAWINGS. DRAWINGS MADE AVAILABLE FOR INFORMATION TO BIDDER ARE NOT TO BE USED FOR OTHER PURPOSES, AND ARE TO BE RETURNED UPON REQUEST OF THE FORWARDING CONTRACTOR.

P THIS DRAWING PRODUCED ON PRO-ENGINEER

REV	DESCRIPTION (REVISION OR ISSUE PURPOSE)	BY	DATE	CHK	DEPT	DATE	PE	REQ	DATE	ORNL	DOE	DATE
1	PER ECN #4882 GENERAL REVISION	GHJ	7/27/04	MJC								

SCALE AS NOTED
TOLERANCES UNLESS OTHERWISE SPECIFIED
FRACTIONS ±
XX DECIMALS ±.01
XXX DECIMALS ±.005
ANGLES ±0°15'
BREAK SHARP EDGES .06 MAX
FINISH 125 UNLESS OTHERWISE SPECIFIED

DRAWING APPROVALS		DATE
DES	P.L.GORANSON	28MAR04
DRW	G.FORTIER	27MAR04
CHK	G. LOVETT	6APR04
SECT	:	:
DEPT	:	:
PE	:	:
CR	:	:
PJ	:	:
REQ	:	:
PPPL DRFT	J,SIEGEL	7/27/04

UT-BATTELLE
Oak Ridge National Laboratory managed for the DEPARTMENT OF ENERGY under U.S. GOVERNMENT contract DE-AC05-000R22725 UT-BATTELLE, LLC. Oak Ridge, Tennessee

PROJECT NAME: NATIONAL COMPACT STELLARATOR EXPERIMENT

VACUUM VESSEL JOINT R&D
END PIECE SEAL
WELDMENT

VERSION NO.	PLANT	BLDG	FL	SHT	OF	TYPE	CLASS
0	X-10	5700	3	1	1	D	U

RELEASE LEVEL: Fabrication
SE1203-007
REV 1