PRELIMINARY

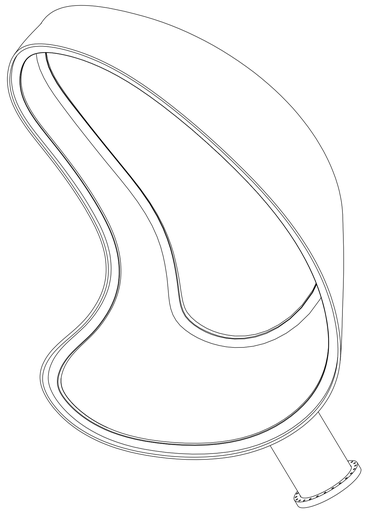

ISOMETRIC VIEW

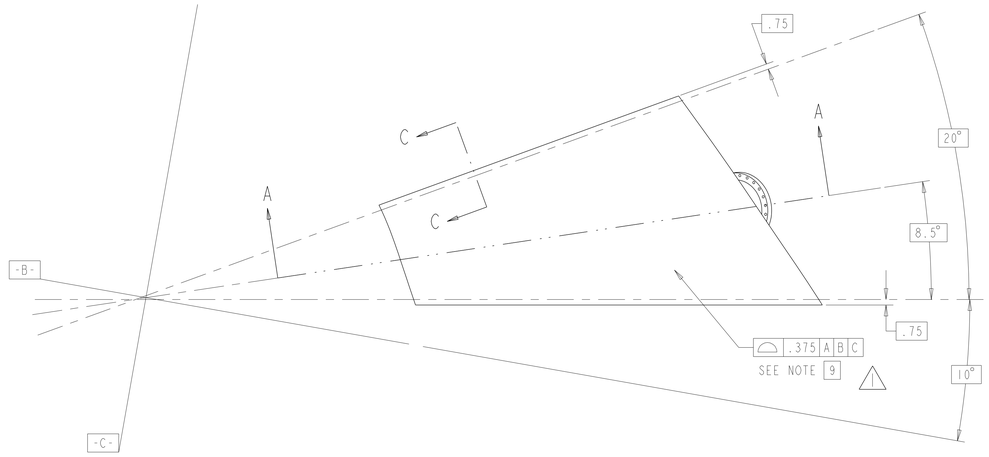

NOTES:

1. INTERPRET DIMENSIONS AND TOLERANCES PER ANSI Y14.5M.
2. DIMENSION ARE IN INCHES.
3. REQUIREMENTS FOR FABRICATING THE VACUUM VESSEL PROTOTYPE ARE DEFINED IN THE DRAWINGS, MODELS, AND SPECIFICATION.
4. GEOMETRY OF VACUUM VESSEL PROTOTYPE IS DEFINED IN CAD MODELS/FILES SE121-001P.ASM, SE121-002P.ASM, AND SE121-003P.ASM.
5. SURFACE FINSISH REQUIREMENTS ARE DEFINED IN SPECIFICATION NCSX-CSPEC-120-01-00 SECTION 3.2.1.2.
6. MATERAIL REQUIREMENTS ARE DEFINED IN SPECIFICATION NCSX-CSPEC-120-01-00 SECTION 3.3.2.1
7. CLEANING REQUIREMENTS ARE DEFINED IN SPECIFICATION NCSX-CSPEC-120-01-00 SECTION 3.3.2.4
8. RIB SURFACE SHALL FOLLOW THE INSIDE SURFACE OF THE SHELL WITHIN ± 0.020 INCH. (3)
9. PROFILE TOLERANCE ON OUTER VACUUM SURFACE IS BILATERAL, i.e. 0.1875 EITHER SIDE OF REFERENCE SURFACE.
10. PROJECTED TOLERANCE ZONE STARTS AT INTERSECTION OF PORT AXIS AND VACUUM VESSEL OUTER SURFACE AND EXTENDS OUTWARD.

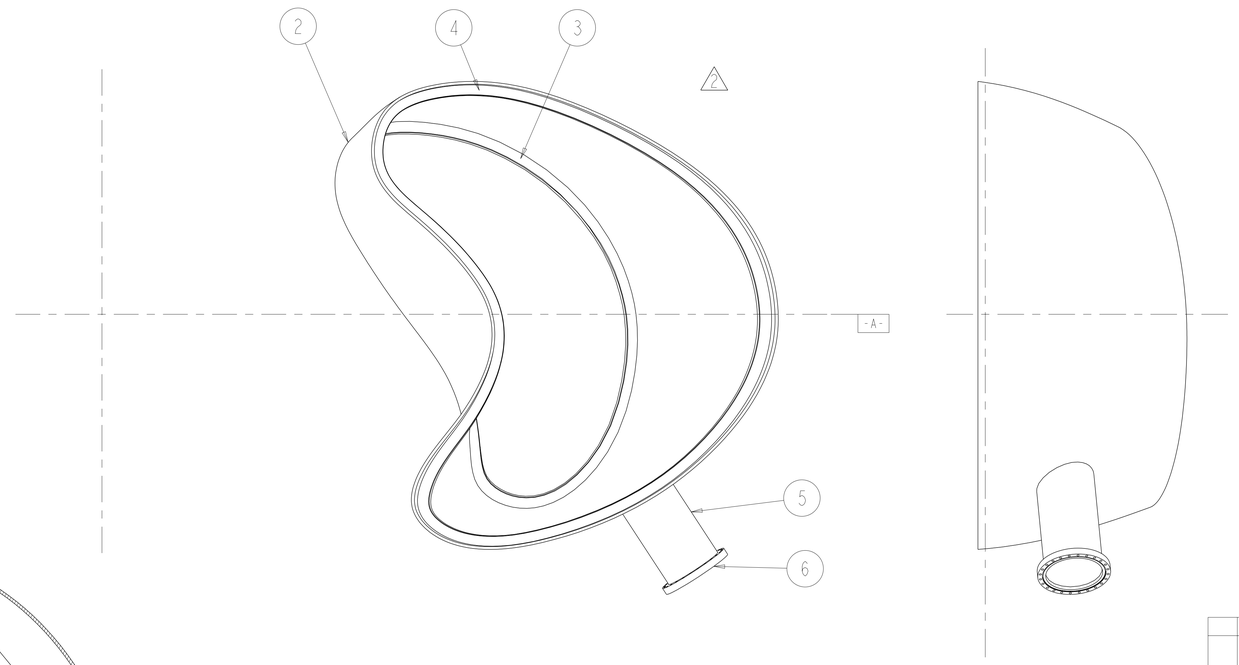

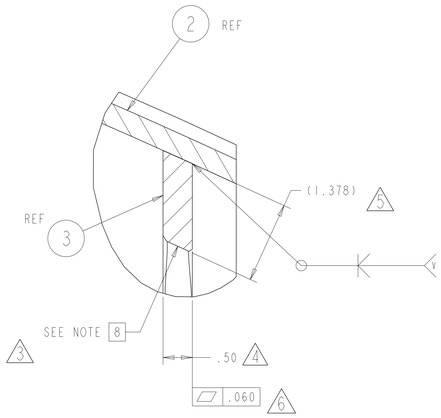

SECTION C-C
SCALE 1.00

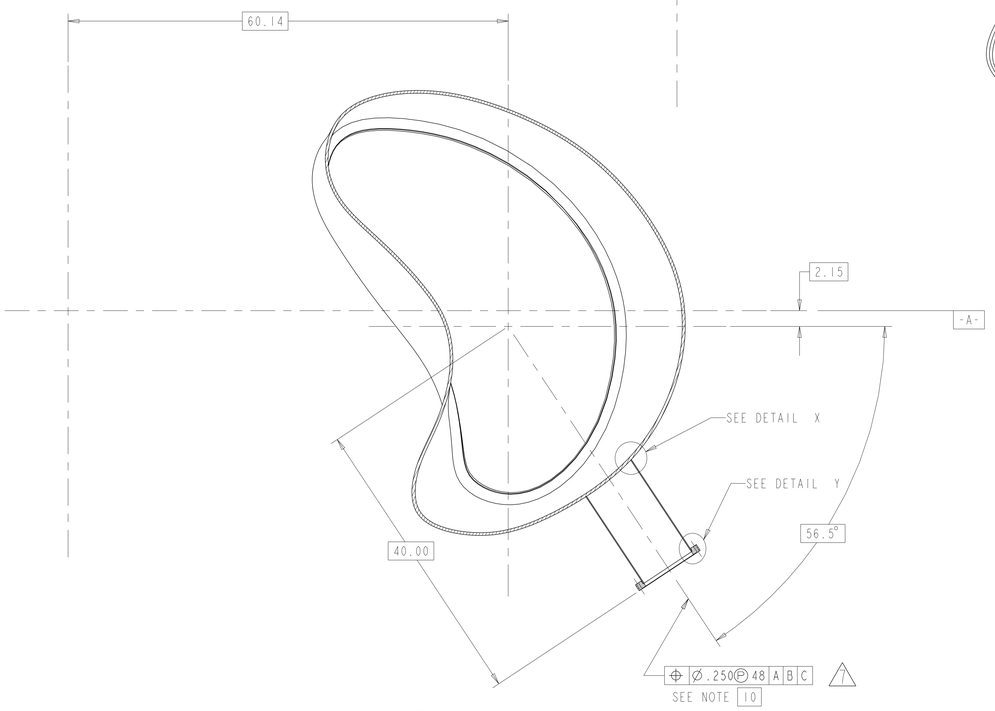

SECTION A-A

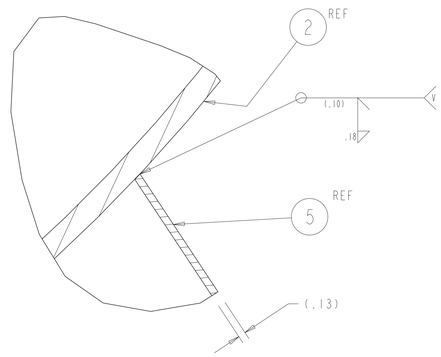

-1 SCALE: .125

DETAIL X
SCALE 1.00

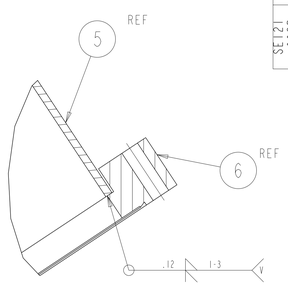

DETAIL Y
SCALE 1.00

PRELIMINARY

	AR					
		-7	WELD, FILLER METAL			7
	1	F10000000NC4	FLANGE CONFLAT 10.0 O.D. NON-ROTATABLE	VARIAN VACUUM TECHNOLOGIES 121 HARTWELL AVENUE LEXINGTON, MA. 02421		6
	1	-5	TUBE 8.0 O.D. X .12 WALL	INCONEL 625		5
	1	-4	PROTOTYPE RIB #2	INCONEL 625		4
	1	-3	PROTOTYPE RIB #1	INCONEL 625		3
	1	-2	PROTOTYPE VACUUM VESSEL SHELL	INCONEL 625		2
	X	-1	PROTOTYPE VACUUM VESSEL SEGMENT PORT AND RIB WELDMENT			1
SE121-002P -1	CAGE CODE	PART OR IDENTIFYING NO	NOMENCLATURE OR DESCRIPTION	MATERIAL	SPECIFICATION	FIND NO
	NEXT ASSEMBLY		PARTS LIST			

QUALITY VERIFICATION
MECHANICAL AND STRUCTURAL
REFERENCE ORNL QA-G05

QV CLAUSE	DOCUMENTS REQUIRED	APPLICABLE TO PART NO *
303	MATERIAL MILL TEST REPORT	
325	MATERIAL SELLER CERT	X
326	SPECIAL MATERIAL INSPECTION REPORT	
205	MANUFACTURING, INSPECTION, AND TEST PLAN	
312	FIELD INSPECTION AND TEST PLAN	
321	WELD AND BRAZE INSPECTION REPORT	
322	HEAT TREAT REPORT (W/CHART)	
310	LEAK TEST REPORT	X
315	CLEANING CERT	X
318	DEVIATION REQUEST	X
319	NONCONFORMANCE REPORT	X
323	DIMENSIONAL REPORT	X
330	FUNCTIONAL TEST REPORT	
100	DOCUMENTION	X

* SYMBOL X INDICATES APPLICABLE TO ALL PARTS OR ITEMS

QA COORDINATOR ..... DATE .....

NO REPRESENTATION OR WARRANTY, EXPRESSED OR IMPLIED, IS MADE AS TO THE ACCURACY, COMPLETENESS OR USEFULNESS OF THE INFORMATION OR STATEMENTS CONTAINED IN THESE DRAWINGS, OR THAT THE USE OR DISCLOSURE OF ANY INFORMATION, APPARATUS, METHOD OR PROCESS DISCLOSED IN THESE DRAWINGS MAY NOT INFRINGE PRIVATE RIGHTS OF OTHERS. NO LIABILITY IS ASSUMED WITH RESPECT TO THE USE OF, OR FOR DAMAGES RESULTING FROM THE USE OF, ANY INFORMATION, APPARATUS, METHOD OR PROCESS DISCLOSED IN THESE DRAWINGS. DRAWINGS MADE AVAILABLE FOR INFORMATION TO BIDDER ARE NOT TO BE USED FOR OTHER PURPOSES, AND ARE TO BE RETURNED UPON REQUEST OF THE FORWARDING CONTRACTOR.

P THIS DRAWING PRODUCED ON PRO-ENGINEER

REV	DESCRIPTION	A-E	BY	CHK	SECT	DEPT	DATE	PE	REQ	DATE	ORNL	DATE	DOE	DATE	QA	CV	EC	EE	EM	IE	M	PD	SE	ST	XAD	PES
	1 ADDED PROJECTED TOL ZONE AND NOTE 10		MJC				1/14/03																			
	2 ADDED FLATNESS TOLERANCE																									
	3 ADDED 1.378 DIMENSION																									
	4 .50 WAS REFERENCE DIMENSION																									
	5 ADDED NOTE 8																									
	6 DELETED PROFILE TOLERANCE																									
A	7 0.375 WAS 0.020, ADDED NOTE 9																									

REVISION OR ISSUE PURPOSE — REVISION APPROVALS — SQUAD CHECK

SCALE NOTED

TOLERANCES UNLESS OTHERWISE SPECIFIED
FRACTIONS :
XX DECIMALS ±.01
XXX DECIMALS ±.005
ANGLES ±0°15'
BREAK SHARP EDGES .06 MAX
FINISH .125 UNLESS OTHERWISE SPECIFIED

DES	P.L.GORANSON	11/26/02
DRW	G.H.JONES	11/26/02
CHK		
SECT		
DEPT		
PE		
CR		
PJ		
REQ		

DRAWING APPROVALS — DATE

UT-BATTELLE

Oak Ridge National Laboratory
managed for the DEPARTMENT OF ENERGY under U.S. GOVERNMENT contract DE-AC05-000R22725
UT-BATTELLE, LLC Oak Ridge, Tennessee

PROJECT NAME
NATIONAL COMPACT STELLARATOR EXPERIMENT

PROTOTYPE VACUUM VESSEL SEGMENT PORT AND RIB WELDMENT

VERSION NO.	PLANT	BLDG	FL	SHT	OF	TYPE	CLASS
3+	Y-12	9201-2	2	1	1	A	U

RELEASE LEVEL		REV
WIP	SE121-001P	A

SE121-001P