NEXT ASS'Y: FINAL ASS'Y:

NOTES

1. INTERPRET DIMENSIONS AND TOLERANCES PER ANSI Y14.5M.
2. DIMENSIONS ARE IN INCHES.

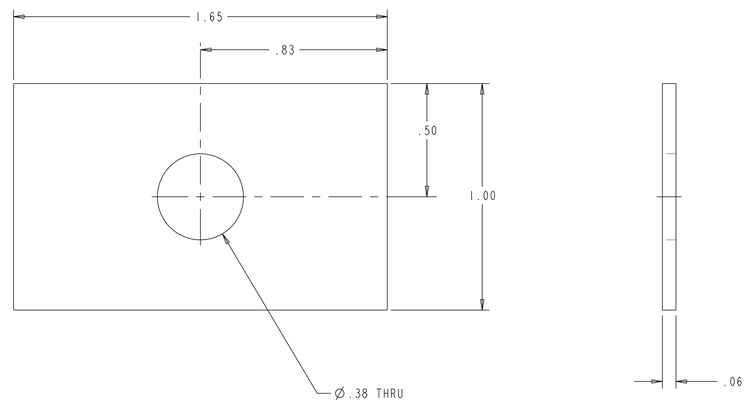

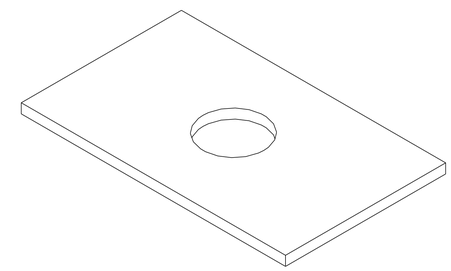

ISOMETRIC VIEW

-1 GRAFOIL GASKET

SCALE 4.00

RELEASED FOR FABRICATION / INSTALLATION

PPPL Drafting: Jerry Siegel 2005.06.24 13:11:06 -05'00'

AR			-1	GRAFOIL GASKET	GTA FLEXIBLE GRAFOIL	UCAR CARBON COMPANY, INC P.O. BOX 94637 CLEVELAND, OH 44101 316-529-3777	1
SE123-050	-1	CAGE CODE	PART OR IDENTIFYING NO	NOMENCLATURE OR DESCRIPTION	MATERIAL	SPECIFICATION	FIND NO
		NEXT ASSEMBLY		PARTS LIST			

SE123-052

NO REPRESENTATION OR WARRANTY,EXPRESSED OR IMPLIED,IS MADE AS TO THE ACCURACY, COMPLETENESS OR USEFULNESS OF THE INFORMATION OR STATEMENTS CONTAINED IN THESE DRAWINGS, OR THAT THE USE OR DISCLOSURE OF ANY INFORMATION, APPARATUS, METHOD OR PROCESS DISCLOSED IN THESE DRAWINGS MAY NOT INFRINGE PRIVATE RIGHTS OF OTHERS. NO LIABILITY IS ASSUMED WITH RESPECT TO THE USE OF, OR FOR DAMAGES RESULTING FROM THE USE OF ANY INFORMATION, APPARATUS, METHOD OR PROCESS DISCLOSED IN THESE DRAWINGS. DRAWINGS MADE AVAILABLE FOR INFORMATION TO BIDDER ARE NOT TO BE USED FOR OTHER PURPOSES, AND ARE TO BE RETURNED UPON REQUEST OF THE FORWARDING CONTRACTOR.

P THIS DRAWING PRODUCED ON PRO-ENGINEER

REV	DESCRIPTION	BY	DATE	CHK	DEPT	DATE	PE	REQ	DATE	ORNL	DOE	DATE
1	⚠ PER ECN NO. 5003	MJC	6/24/05	PLG								

REVISION OR ISSUE PURPOSE — REVISION APPROVAL

SCALE NOTED

TOLERANCES UNLESS OTHERWISE SPECIFIED

FRACTIONS :
XX DECIMALS ±.01
XXX DECIMALS ±.005
ANGLES ±0°15'
BREAK SHARP EDGES .06 MAX
FINISH .125 UNLESS OTHERWISE SPECIFIED

DES	P GORANSON	4-22-05
DRW	G MCGINNIS	4-22-05
CHK	G.H. JONES	05-04-05
SECT	:	:
DEPT	:	:
PE	:	:
CR	:	:
PJ	:	:
REQ	:	:
PPPL	DRFT	:
	:	:
	:	:

DRAWING APPROVALS — DATE

UT-BATTELLE

Oak Ridge National Laboratory managed for the DEPARTMENT OF ENERGY under U.S. GOVERNMENT contract DE-AC05-00OR22725 UT-BATTELLE, LLC. Oak Ridge, Tennessee

PROJECT NAME: NATIONAL COMPACT STELLARATOR EXPERIMENT

VACUUM VESSEL HEATING/COOLING GRAFOIL GASKET DETAIL

VERSION NO.	PLANT	BLDG	FL	SHT	OF	TYPE	CLASS
0	ORNL	5700	3	1	1	S	U

RELEASE LEVEL		REV
Fabrication	SE123-052	1