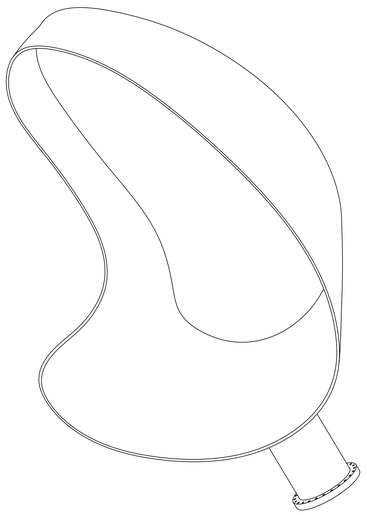

ISOMETRIC VIEW

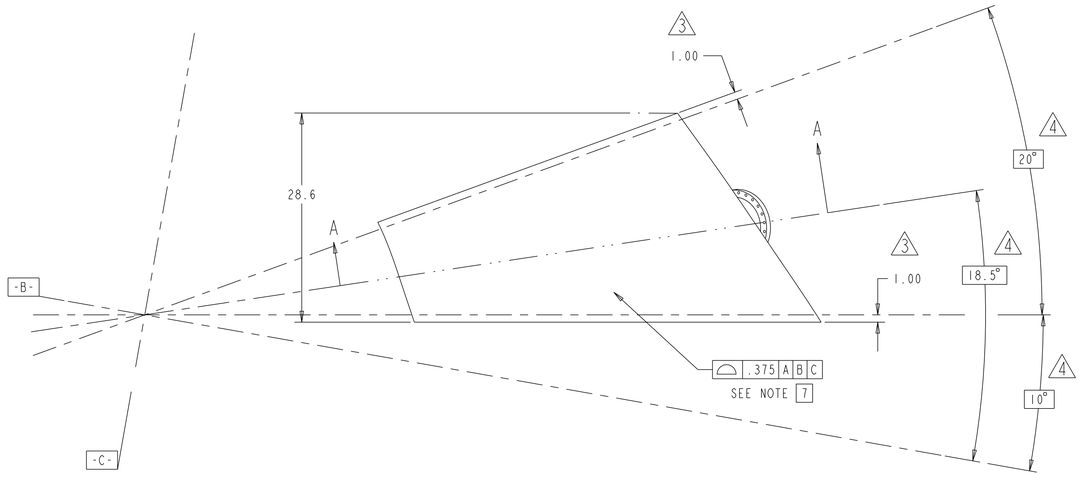

NOTES:

1. INTERPRET DIMENSIONS AND TOLERANCES PER ANSI Y14.5M.
2. DIMENSION ARE IN INCHES.
3. REQUIREMENTS FOR FABRICATING THE VACUUM VESSEL PROTOTYPE ARE DEFINED IN THE DRAWINGS, MODELS, AND SPECIFICATION, NCSX-CSPEC-121-01.
4. GEOMETRY OF VACUUM VESSEL PROTOTYPE IS DEFINED IN CAD MODELS/FILES SE121-001P.ASM, SE121-002P.ASM, AND SE121-003P.ASM.
5. PROJECTED TOLERANCE ZONE STARTS AT INTERSECTION OF PORT AXIS AND VACUUM VESSEL OUTER SURFACE AND EXTENDS OUTWARD.
6. WELDING PROCEEDURES AND PERFORMANCE QUALIFICATIONS SHALL BE PERFORMED IN ACCORDANCE WITH THE REQUIREMENTS OF ASME CODE, SECTION IX. WELDS MAY BE MADE BY THE GTAW OR GMAW PROCESSES. WELDS USING SMAW PROCESS ARE NOT PERMITTED. WELD INSPECTIONS SHALL BE PERFORMEND IN ACCORDANCE WITH SPECIFICATION NCSX-CSPEC-121-01-00.
7. PROFILE TOLERANCE ON OUTER VACUUM SURFACE IS BILATERAL, i.e. 0.1875 EITHER SIDE OF REFERENCE SURFACE.
8. MATERIAL THICKNESS TOLERANCES SHALL BE PER REQUIREMENTS SET FORTH IN ASTM B443.THE MINIMUM THICKNESS AFTER FORMING SHALL BE .338. THINNING BELOW THE STOCK THICKNESS SHALL NOT OCCUR OVER MORE THAN 10% OF THE TOTAL POLOIDAL CIRCUMFERENCE OF ANY CROSS-SECTION.

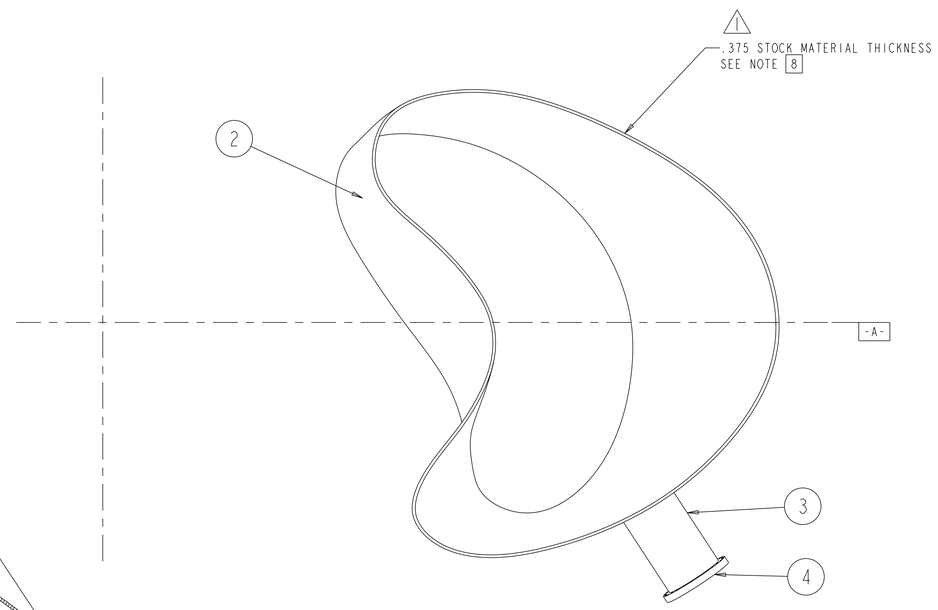

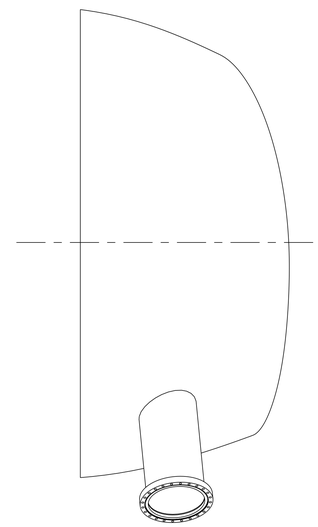

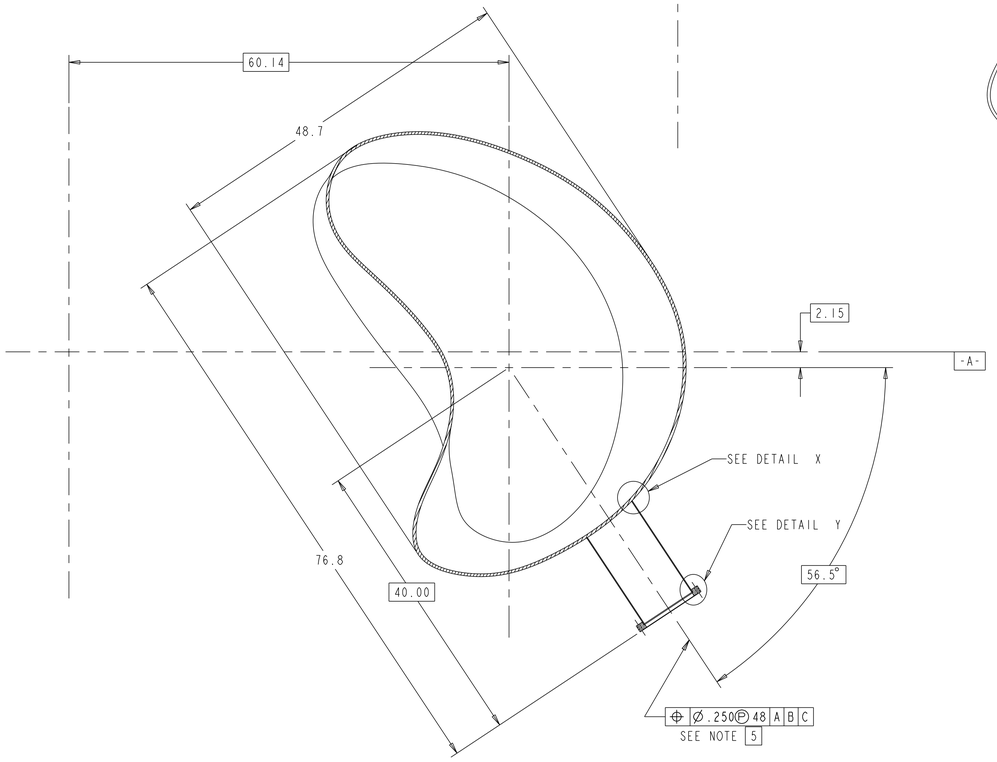

SECTION A-A

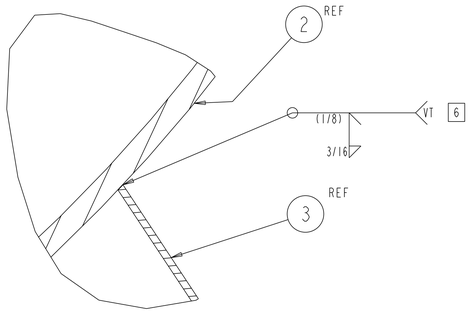

DETAIL X
SCALE 1.00

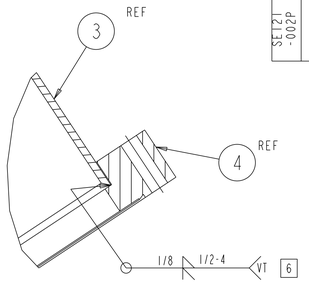

DETAIL Y
SCALE 1.00

-1 SCALE: .12

WELDING ENGINEER
APPROVED ROBERT F PARSELLS DATE: 7/14/03

	AR		-5	WELD, FILLER METAL		5
	1		F10000000NC4	FLANGE CONFLAT 10.0 O.D. NON-ROTATABLE	VARIAN VACUUM TECHNOLOGIES 121 HARTWELL AVENUE LEXINGTON, MA. 02421	4
	1		-3	TUBE 8.0 O.D. X .12 WALL	UNS N06625	3
	1		-2	PROTOTYPE VACUUM VESSEL SHELL	UNS N06625	2
			-1	PROTOTYPE VACUUM VESSEL SEGMENT PORT WELDMENT		1
SE121-002P	-	CAGE CODE	PART OR IDENTIFYING NO	NOMENCLATURE OR DESCRIPTION	MATERIAL / SPECIFICATION	FIND NO
		NEXT ASSEMBLY		PARTS LIST		

QUALITY VERIFICATION
MECHANICAL AND STRUCTURAL
REFERENCE ORNL QA-605

QV CLAUSE	DOCUMENTS REQUIRED	APPLICABLE TO PART NO *
303	MATERIAL MILL TEST REPORT	X
325	MATERIAL SELLER CERT	X
326	SPECIAL MATERIAL INSPECTION REPORT	
205	MANUFACTURING, INSPECTION, AND TEST PLAN	X
312	FIELD INSPECTION AND TEST PLAN	
321	WELD AND BRAZE INSPECTION REPORT	X
322	HEAT TREAT REPORT (W/CHART)	X
310	LEAK TEST REPORT	X
315	CLEANING CERT	X
318	DEVIATION REQUEST	X
319	NONCONFORMANCE REPORT	X
323	DIMENSIONAL REPORT	X
330	FUNCTIONAL TEST REPORT	X
100	DOCUMENTATION	X

* SYMBOL X INDICATES APPLICABLE TO ALL PARTS OR ITEMS

QA COORDINATOR ..... DATE .....

REV																								
2	6 TOLERANCE WAS .01 PER ECN #4799	GHJ			9/5/03																			
	5 WAS ASTM 443 PER ECN #4799																							
	4 MOD. DIM. SCHEME PER ECN #4799																							
	3 ADDED 1.00 DIMS PER ECN #4799																							
1	2 ADDED NOTE 8	MJC	GHJ		8/8/03	JS		PLG																
	1 ADDED MATERIAL THICKNESS																							
								ORNL								QA								

SCALE NOTED
TOLERANCES UNLESS OTHERWISE SPECIFIED
FRACTIONS :
XX DECIMALS ±.03
XXX DECIMALS ±.005
ANGLES ±0°15'
BREAK SHARP EDGES .06 MAX
FINISH 125 UNLESS OTHERWISE SPECIFIED

DES	P.L.GORANSON	7/14/03
DRW	G.H.JONES	7/14/03
CHK	M.J.COLE	7/14/03
SECT		
DEPT		
PE		
CR		
PJ		
REQ		
PPPL DRFT	J.SIEGEL	7/15/03

UT-BATTELLE
Oak Ridge National Laboratory
managed for the DEPARTMENT OF ENERGY under U.S. GOVERNMENT contract DE-AC05-00OR22725
UT-BATTELLE, LLC. Oak Ridge, Tennessee

PROJECT NAME: NATIONAL COMPACT STELLERATOR EXPERIMENT

PROTOTYPE VACUUM VESSEL SEGMENT PORT WELDMENT

VERSION NO.	PLANT	BLDG	FL	SHT	OF	TYPE	CLASS
1+	Y-12	9201-2	2	1	1	A	U

RELEASE LEVEL: Fabrication
SE121-001P
REV 2

NO REPRESENTATION OR WARRANTY,EXPRESSED OR IMPLIED,IS MADE AS TO THE ACCURACY, COMPLETENESS OR USEFULNESS OF THE INFORMATION OR STATEMENTS CONTAINED IN THESE DRAWINGS, OR THAT THE USE OR DISCLOSURE OF ANY INFORMATION, APPARATUS, METHOD OR PROCESS DISCLOSED IN THESE DRAWINGS MAY NOT INFRINGE PRIVATE RIGHTS OF OTHERS. NO LIABILITY IS ASSUMED WITH RESPECT TO THE USE OF, OR FOR DAMAGES RESULTING FROM THE USE OF, ANY INFORMATION, APPARATUS, METHOD OR PROCESS DISCLOSED IN THESE DRAWINGS. DRAWINGS MADE AVAILABLE FOR INFORMATION TO BIDDER ARE NOT TO BE USED FOR OTHER PURPOSES, AND ARE TO BE RETURNED UPON REQUEST OF THE FORWARDING CONTRACTOR.

P THIS DRAWING PRODUCED ON PRO-ENGINEER

SE121-001P