NOTES:
1. INTERPRET DIMENSIONS AND TOLERANCES PER ANSI Y14.5M.
2. DIMENSION ARE IN INCHES.
3. REQUIREMENTS FOR FABRICATING THE VACUUM VESSEL SPACER SPACER ARE DEFINED IN THE DRAWINGS, MODELS, AND SPECIFICATION.
4. GEOMETRY OF VACUUM VESSEL SPACER FLANGE IS DEFINED IN CAD MODELS/FILES SE121-016.PRT.
5. MEASURE AND MACHINE TO FIT AT ASSEMBLY, SE120-014.
6. ADDITIONAL TOLERANCE LIMITS ARE DEFINED IN DOCUMENT NCSX-12-122002-PH.

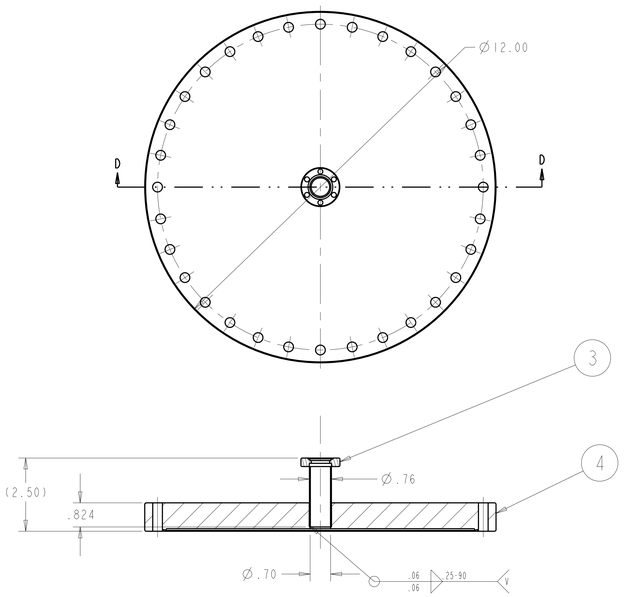

SECTION D-D

1 SCALE: .50

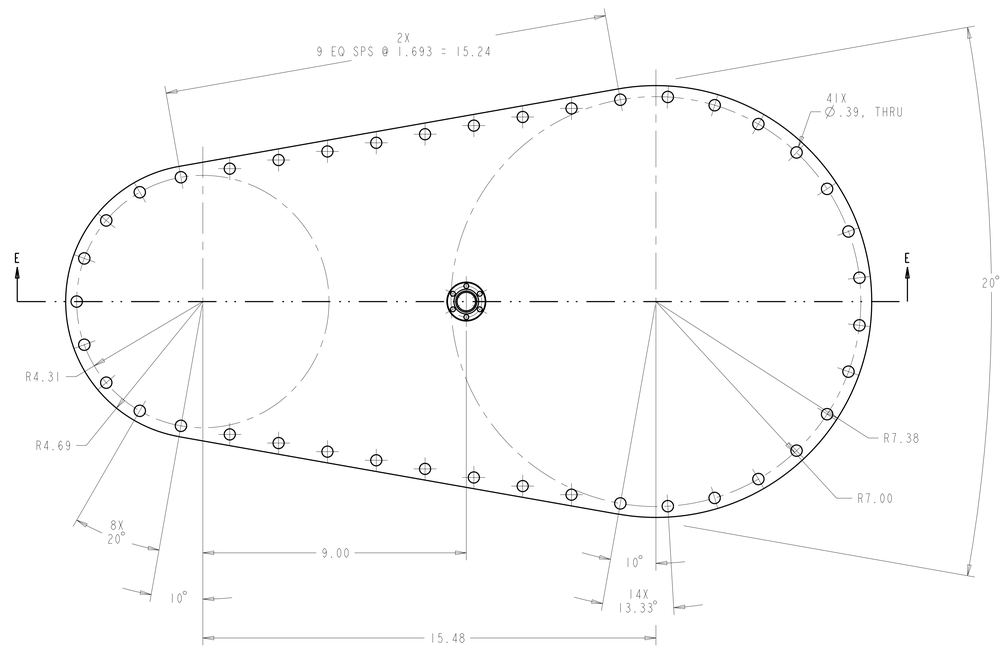

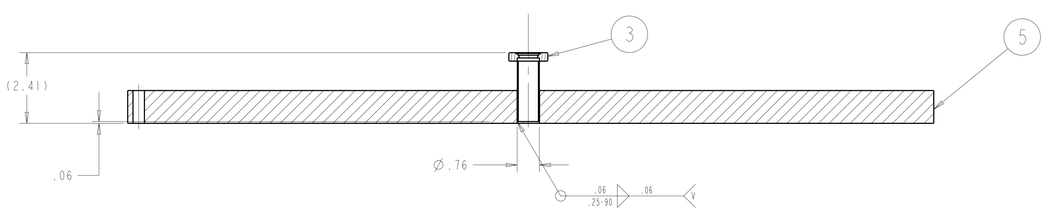

SECTION E-E

2 SCALE: .50

next assy SE120-XXX -2	-1	CAGE CODE	PART OR IDENTIFYING NO	NOMENCLATURE OR DESCRIPTION	MATERIAL	SPECIFICATION	FIND NO
AR	AR		-6	WELD, FILLER METAL			6
1			-5	VERTICAL PORT FLANGE			5
	1		-4	Ø12 NON-ROTATABLE BLANK CONFLAT FLG			4
1	1		-3	.75 INCH HALF NIPPLE CONFLAT FLANGE			3
AR	X		-2	VERTICAL PORT COVER TEST FLANGE WELDMENT			2
AR	X		-1	12 INCH COVER TEST FLANGE WELDMENT			1
			NEXT ASSEMBLY	PARTS LIST			

QUALITY VERIFICATION
MECHANICAL AND STRUCTURAL
REFERENCE ORNL QA-605

QV CLAUSE	DOCUMENTS REQUIRED	APPLICABLE TO PART NO *
303	MATERIAL MILL TEST REPORT	
325	MATERIAL SELLER CERT	X
326	SPECIAL MATERIAL INSPECTION REPORT	
205	MANUFACTURING, INSPECTION, AND TEST PLAN	X
312	FIELD INSPECTION AND TEST PLAN	X
321	WELD AND BRAZE INSPECTION REPORT	X
322	HEAT TREAT REPORT (WTCHART)	
310	LEAK TEST REPORT	X
315	CLEANING CERT	X
318	DEVIATION REQUEST	X
319	NONCONFORMANCE REPORT	X
323	DIMENSIONAL REPORT	X
330	FUNCTIONAL TEST REPORT	
100	DOCUMENTTION	X

* SYMBOL X INDICATES APPLICABLE TO ALL PARTS OR ITEMS

QA COORDINATOR ..... DATE .....

NO REPRESENTATION OR WARRANTY,EXPRESSED OR IMPLIED,IS MADE AS TO THE ACCURACY, COMPLETENESS OR USEFULNESS OF THE INFORMATION OR STATEMENTS CONTAINED IN THESE DRAWINGS, OR THAT THE USE OR DISCLOSURE OF ANY INFORMATION, APPARATUS, METHOD OR PROCESS DISCLOSED IN THESE DRAWINGS MAY NOT INFRINGE PRIVATE RIGHTS OF OTHERS. NO LIABILITY IS ASSUMED WITH RESPECT TO THE USE OF, OR FOR DAMAGES RESULTING FROM THE USE OF, ANY INFORMATION, APPARATUS, METHOD OR PROCESS DISCLOSED IN THESE DRAWINGS. DRAWINGS MADE AVAILABLE FOR INFORMATION TO BIDDER ARE NOT TO BE USED FOR OTHER PURPOSES, AND ARE TO BE RETURNED UPON REQUEST OF THE FORWARDING CONTRACTOR.

P THIS DRAWING PRODUCED ON PRO-ENGINEER

REV | ORNL | QA

SCALE NOTED
TOLERANCES UNLESS OTHERWISE SPECIFIED
FRACTIONS ·
XX DECIMALS ±.01
XXX DECIMALS ±.005
ANGLES ±0°15'
BREAK SHARP EDGES .06 MAX
FINISH .125 UNLESS OTHERWISE SPECIFIED

DES	P. L. GORANSON	8/03
DRW	G.H. JONES	8/03
CHK		
SECT		
DEPT		
PE		
CR		
PJ		
REQ		
PPPL DRFT		

UT-BATTELLE
Oak Ridge National Laboratory
managed for the DEPARTMENT OF ENERGY under U.S. GOVERNMENT contract DE-AC05-00OR22725
UT-BATTELLE, LLC. Oak Ridge, Tennessee

PROJECT NAME
NATIONAL COMPACT STELLERATOR EXPERIMENT

VACUUM VESSEL
PORT COVER TEST FLANGES
DETAIL

VERSION NO.	PLANT	BLDG	FL	SHT	OF	TYPE	CLASS
###	XX	XX	XX	1	1	XX	U

RELEASE LEVEL ### | SE122-104 | REV A

SE122-104