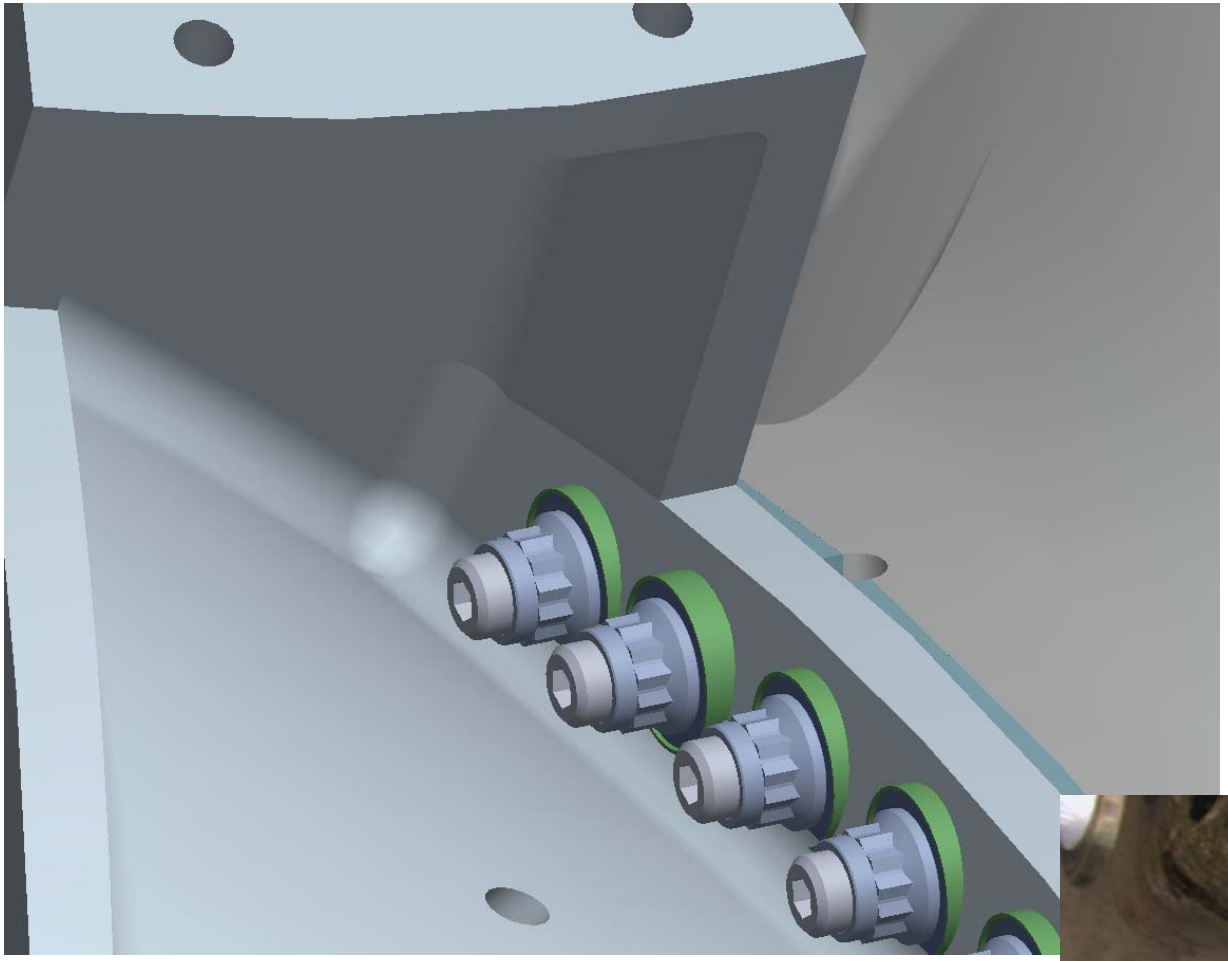

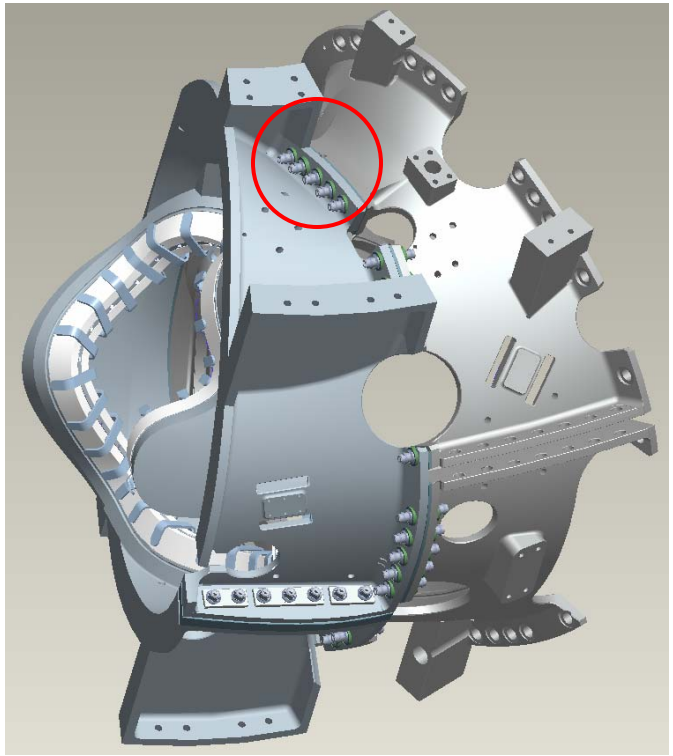

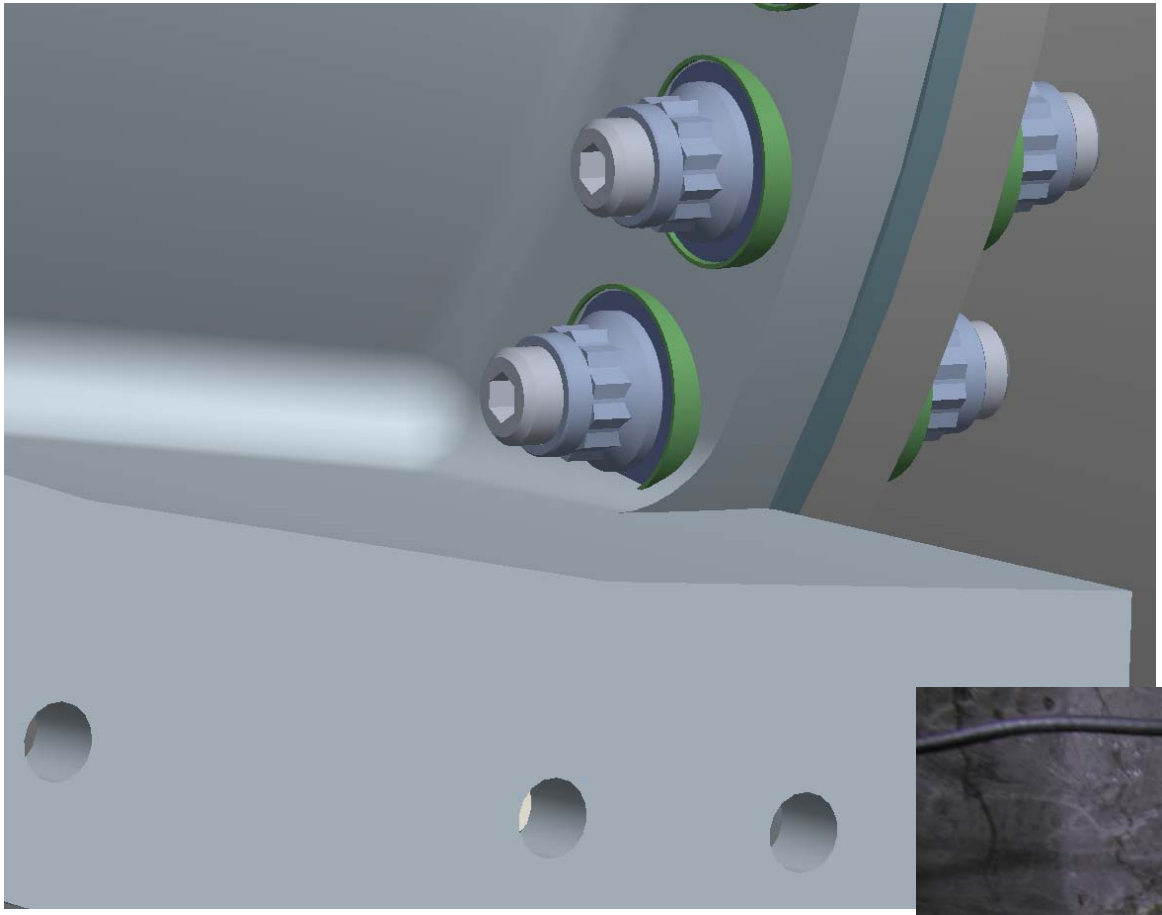

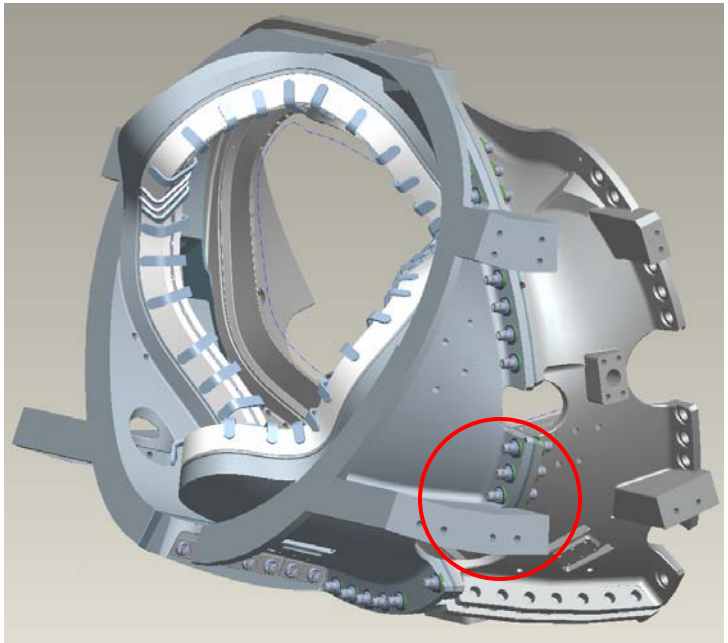

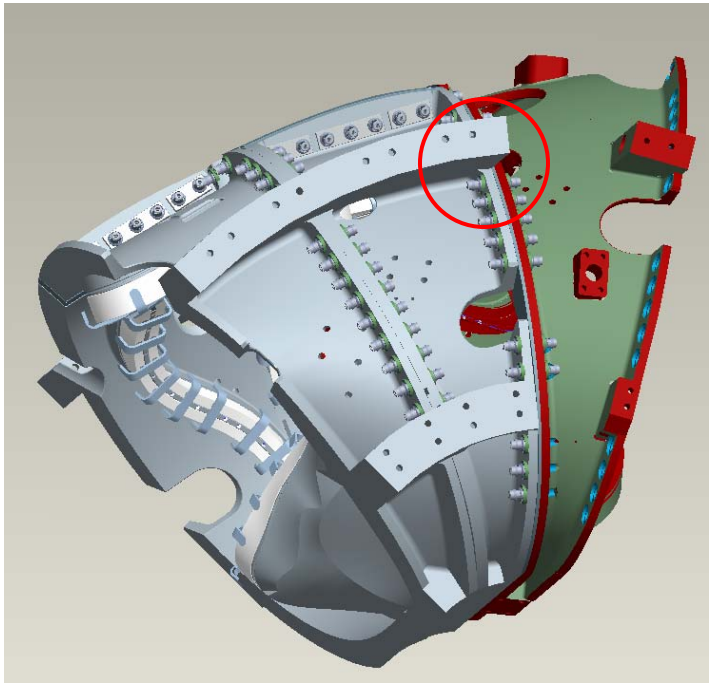

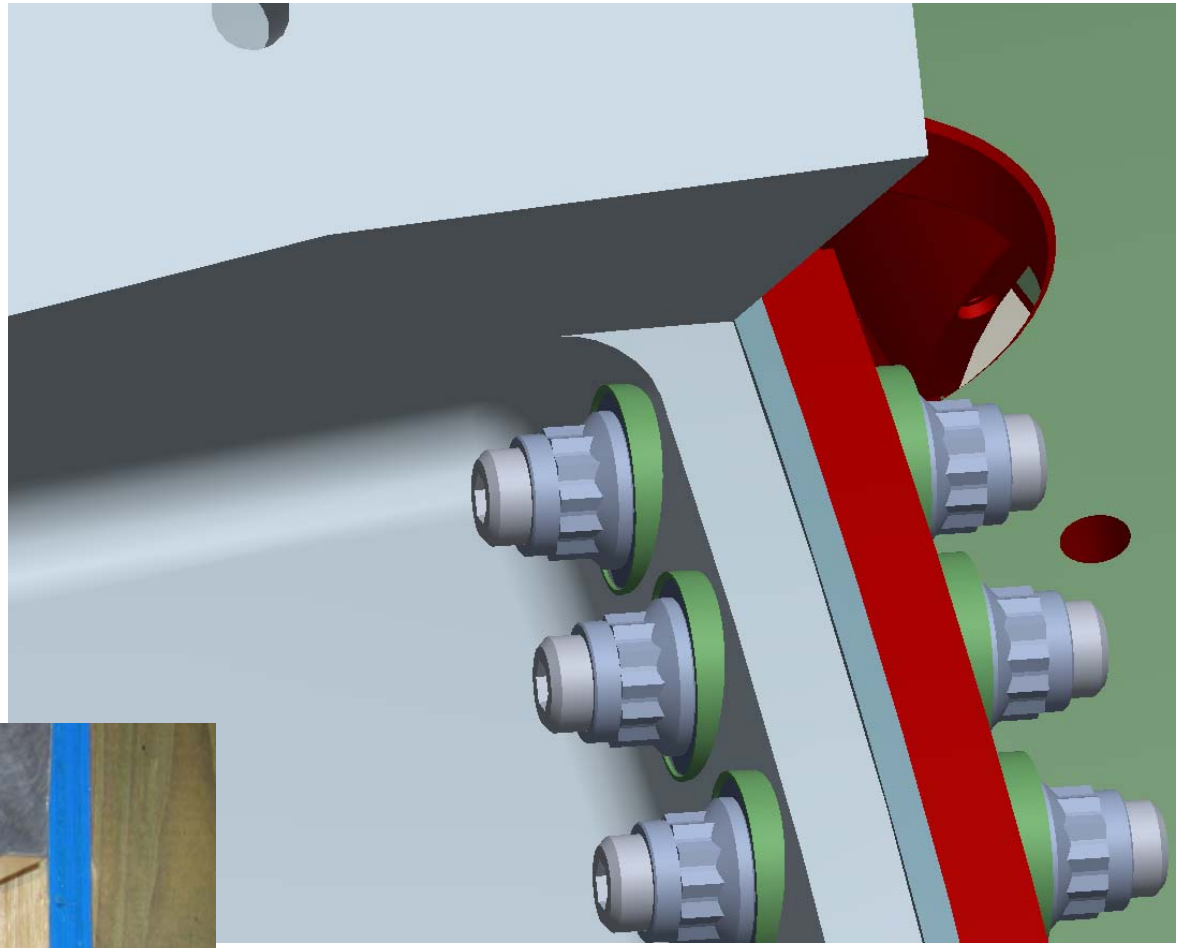

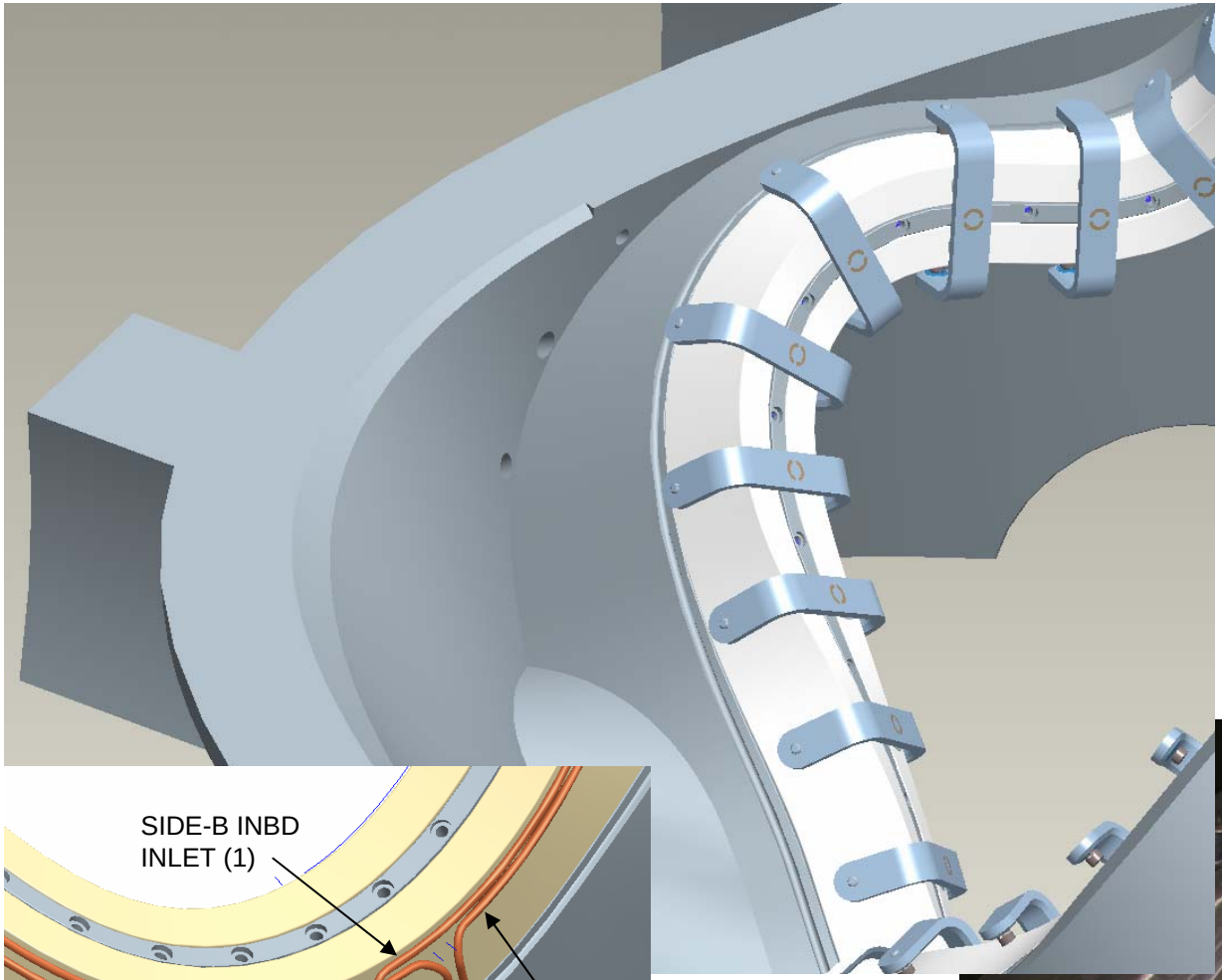

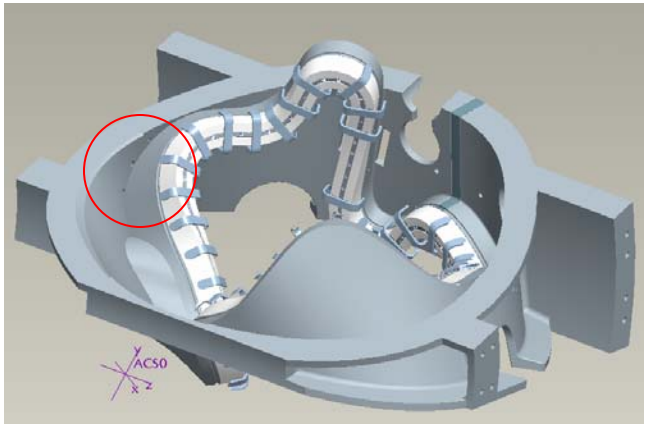
ACS0

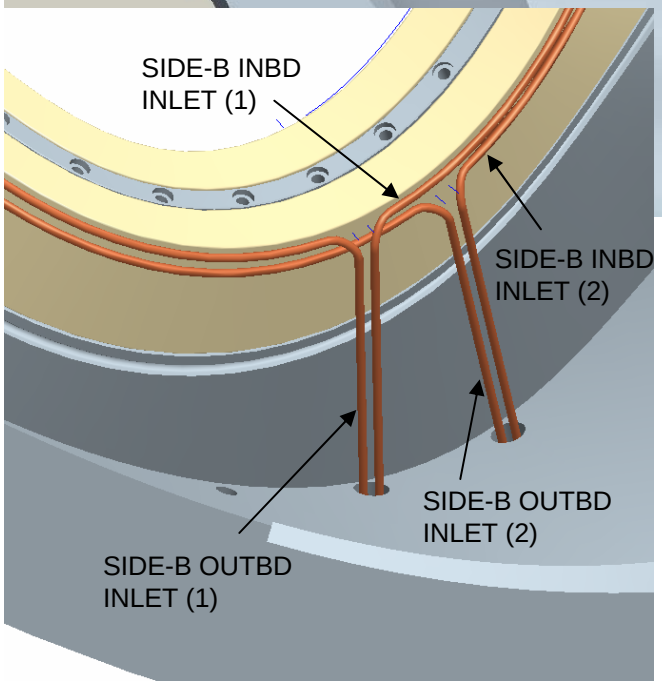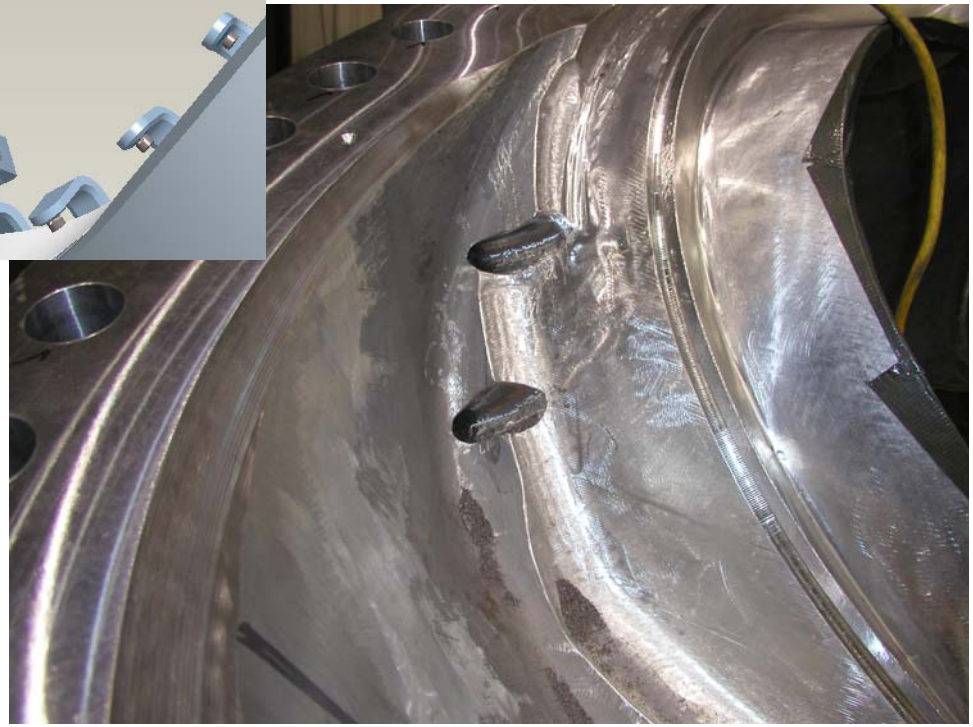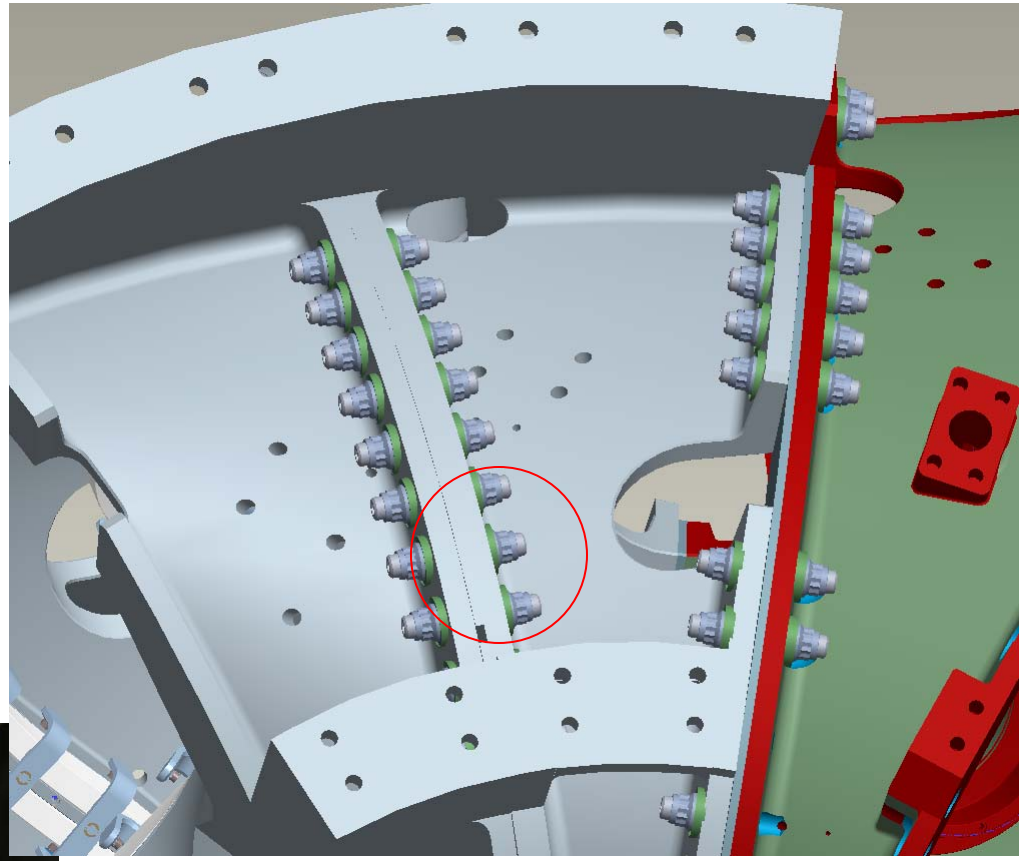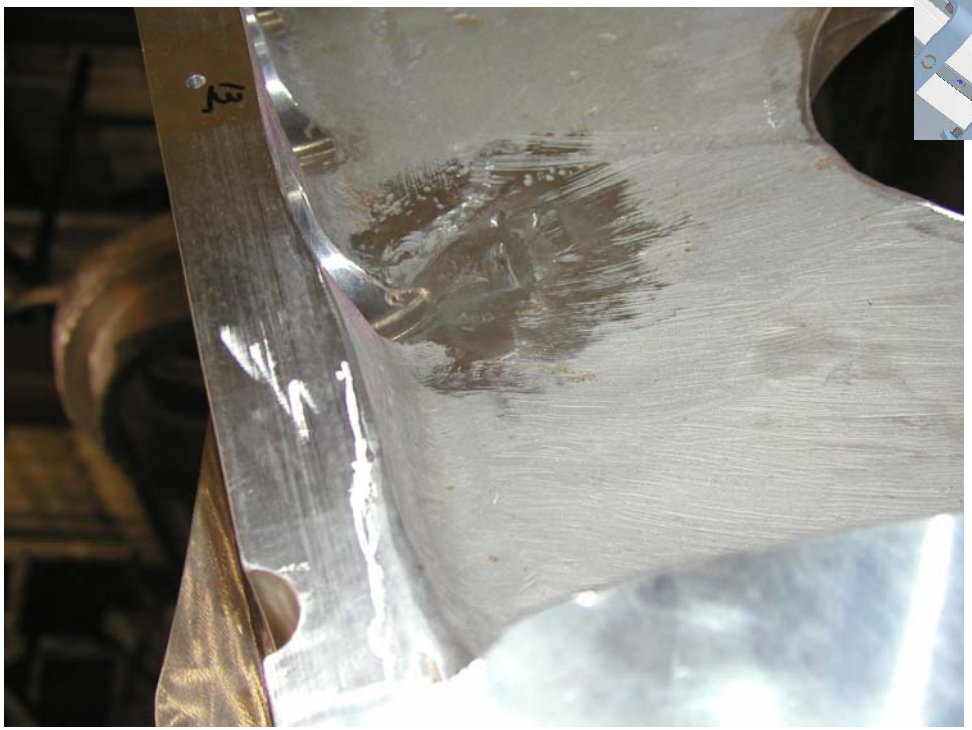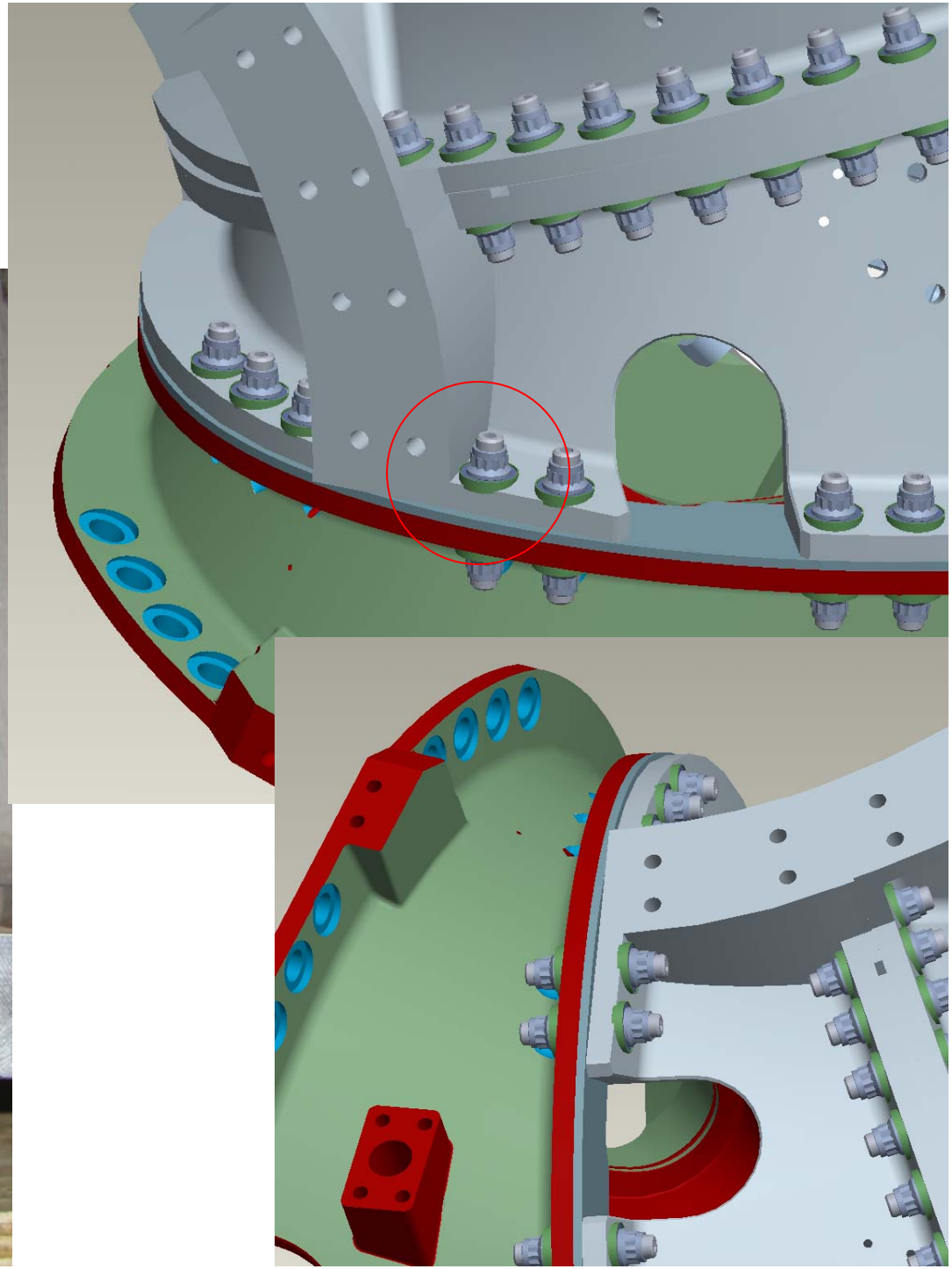
SIDE-B INBD
INLET (1)
SIDE-B INBD
INLET (2)
SIDE-B OUTBD
INLET (2)
SIDE-B OUTBD
INLET (1)