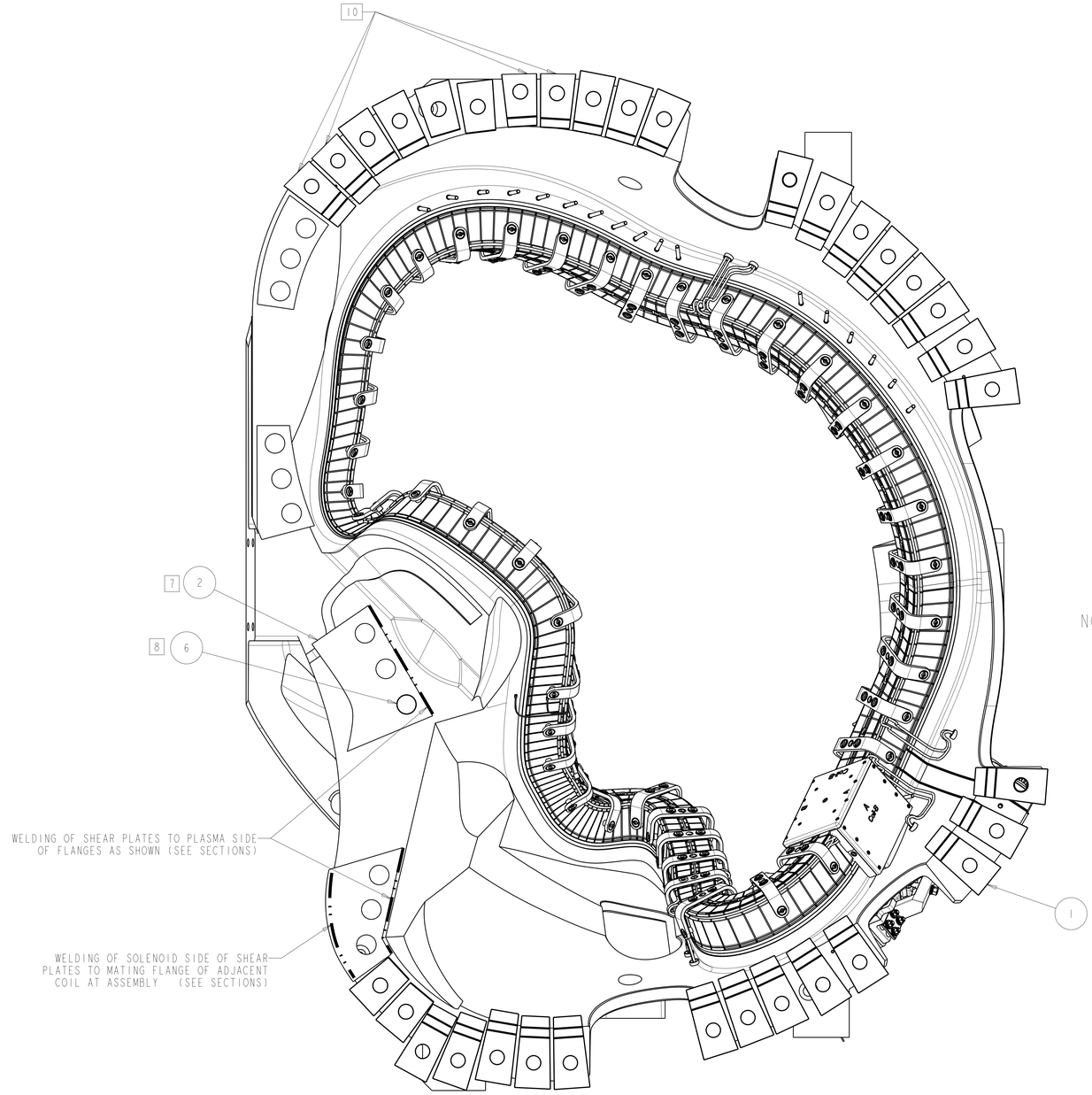

NOTE: MOD COILS SHOW ON SHEETS 2-5 ARE SHOWN AS PART ONLY FOR CLARITY. SHIMS AND SHEAR PLATES TO BE INSTALLED AND WELDED ON MOD COIL ASSEMBLIES AS SHOWN IN THIS VIEW.

NOTES

1. DRAWING PREPARED IN ACCORDANCE WITH ASME Y14.100-2004.
2. INTERPRET DIMENSIONS AND TOLERANCES PER ASME Y14.5M-1994.
3. DIMENSIONS ARE IN INCHES
4. MAGNETIC PERMEABILITY NOT TO EXCEED 1.02 AS TESTED BY A SEVERN INDICATOR, AVAILABLE FROM:
   SEVERN ENGINEERING
   AUBURN, ALABAMA 36830
   WWW.SEVERNENGINEERING.COM
5. WELDING SHALL BE PERFORMED IN ACCORDANCE WITH THE REQUIREMENTS OF PPPL PROCEDURE ENG-037. VISUAL WELD INSPECTION SHALL BE PERFORMED IN ACCORDANCE WITH THE ACCEPTANCE CRITERIA OF AWS D1.1 SECTION 6.
6. ASSEMBLE PER THIS DRAWING AND SPECIFICATION NCSX-CSPEC-185-01.

[7] SEE SHIM AND SHEAR PLATE DRAWINGS SE140-040, SE140-052, SE140-053, SE140-054 AND SE140-055 FOR ADDITIONAL INFORMATION.

[8] PUCKS TO BE CUSTOM SIZED PRIOR TO INSTALLATION. SEE PUCK DRAWING SE140-056 FOR ADDITIONAL INFORMATION.

[9] THESE SHIMS ARE NOT LOCATED ON STUDS AND ARE TO BE WELDED IN PLACE APPROX AS SHOWN. GRIND OFF ALUMINA COATING AS REQ'D FOR WELDING. THESE SHIMS MAY BE ORIENTED IN ANY POSITION BUT MUST BE CLEAR OF POLODIAL BREAKS AND PORT OPENINGS. SHIMS MAY BE TRIMMED AS REQ'D BUT MUST MAINTAIN .25 MIN EDGE TRACKING WITH CASTING EDGES OR SURFACES. COAT EXPOSED EDGES WITH AN APPROVED EPOXY TO MAINTAIN ELECTRICAL ISOLATION.

[10] THESE SHIMS TO BE TRIMMED TO .25 FROM CASTING FLANGE FOR ADDITIONAL ASSEMBLY CLEARANCE. ADDITIONAL SHIMS MAY ALSO BE TRIMMED DURING INSTALLATION AS REQ'D. COAT EXPOSED EDGES WITH AN APPROVED EPOXY AFTER CUTTING.

MODULAR COIL SHIM AND SHEAR PLATE LAYOUT

SCALE .18

SE100-001	SE100-003	SE140-003	CAGE CODE	PART OR IDENTIFYING NO	NOMENCLATURE OR DESCRIPTION	MATERIAL	SPECIFICATION	FIND NO
AR				SE140-058-2	C-C PUCK			11
AR				SE140-058-1	C-C PUCK			10
		AR		SE140-056-4	PUCK - 1.5"			9
	AR			SE140-056-3	PUCK - IRREGULAR			8
		AR		SE140-056-2	PUCK - 1.75"			7
	AR	AR		SE140-056-1	PUCK - 2"			6
AR				SE140-055	C-C INBOARD SHEAR PLATE			5
	AR			SE140-054	A-A INBOARD SHEAR PLATE			4
		AR		SE140-053	B-C INBOARD SHEAR PLATE			3
		AR		SE140-052	A-B INBOARD SHEAR PLATE			2
AR	AR	AR		SE140-040	SINGLE HOLE SHIM			1
				NEXT ASSEMBLY	PARTS LIST			

WELDING ENGINEER
APPROVED L. DUDEK DATE: 01/08

RELEASED FOR FABRICATION / INSTALLATION
PPPL Drafting: Jerry Siegel

REV	DESCRIPTION	BY	DATE	CHK	DEPT	DATE	PE	REQ	DATE	ORNL	DOE	DATE
0	ORIGINAL ISSUE	GM	01/08	MC		01/08						

REVISION OR ISSUE PURPOSE — REVISION APPROVAL

SCALE NOTED
TOLERANCES UNLESS OTHERWISE SPECIFIED
FRACTIONS ±
XX DECIMALS ±.01
XXX DECIMALS ±.005
ANGLES ±0°15'
BREAK SHARP EDGES .06 MAX
FINISH 125 UNLESS OTHERWISE SPECIFIED

DRAWING APPROVALS		DATE
DES	D WILLIAMSON	01/2008
DRW	G MCGINNIS	01/2008
CHK	M COLE	01/2008
SECT	:	:
DEPT	:	:
PE	:	:
CR	:	:
PJ	:	:
REQ	:	:
PPPL DRFT	J SIEGEL	01/2008

UT-BATTELLE
Oak Ridge National Laboratory managed for the DEPARTMENT OF ENERGY under U.S. GOVERNMENT contract DE-AC05-00OR22725 UT-BATTELLE, LLC. Oak Ridge, Tennessee

PROJECT NAME: NATIONAL COMPACT STELLARATOR EXPERIMENT

MODULAR COIL SHIM AND SHEAR PLATE LAYOUT

VERSION NO.	PLANT	BLDG	FL	SHT	OF	TYPE	CLASS
28	ORNL	5700	3	1	8	S	U

RELEASE LEVEL: Fabrication — SE140-046 — REV 0

NO REPRESENTATION OR WARRANTY,EXPRESSED OR IMPLIED,IS MADE AS TO THE ACCURACY, COMPLETENESS OR USEFULNESS OF THE INFORMATION OR STATEMENTS CONTAINED IN THESE DRAWINGS, OR THAT THE USE OR DISCLOSURE OF ANY INFORMATION, APPARATUS, METHOD OR PROCESS DISCLOSED IN THESE DRAWINGS MAY NOT INFRINGE PRIVATE RIGHTS OF OTHERS. NO LIABILITY IS ASSUMED WITH RESPECT TO THE USE OF, OR FOR DAMAGES RESULTING FROM THE USE OF, ANY INFORMATION, APPARATUS, METHOD OR PROCESS DISCLOSED IN THESE DRAWINGS. DRAWINGS MADE AVAILABLE FOR INFORMATION TO BIDDER ARE NOT TO BE USED FOR OTHER PURPOSES, AND ARE TO BE RETURNED UPON REQUEST OF THE FORWARDING CONTRACTOR.

P THIS DRAWING PRODUCED ON PRO-ENGINEER

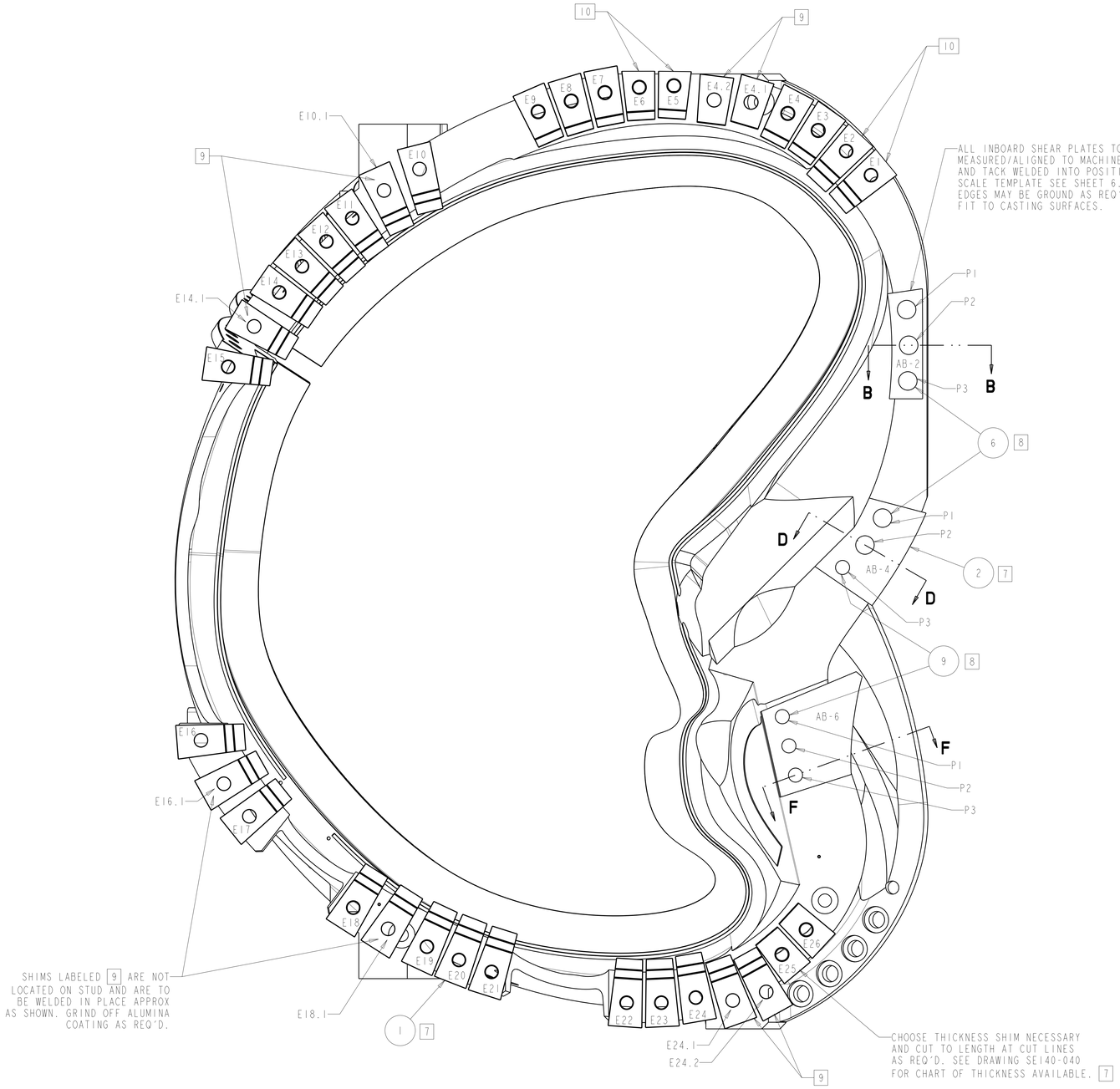

A-B JOINT LOOKING AT THE A COIL B FLANGE
(B COIL REMOVED)

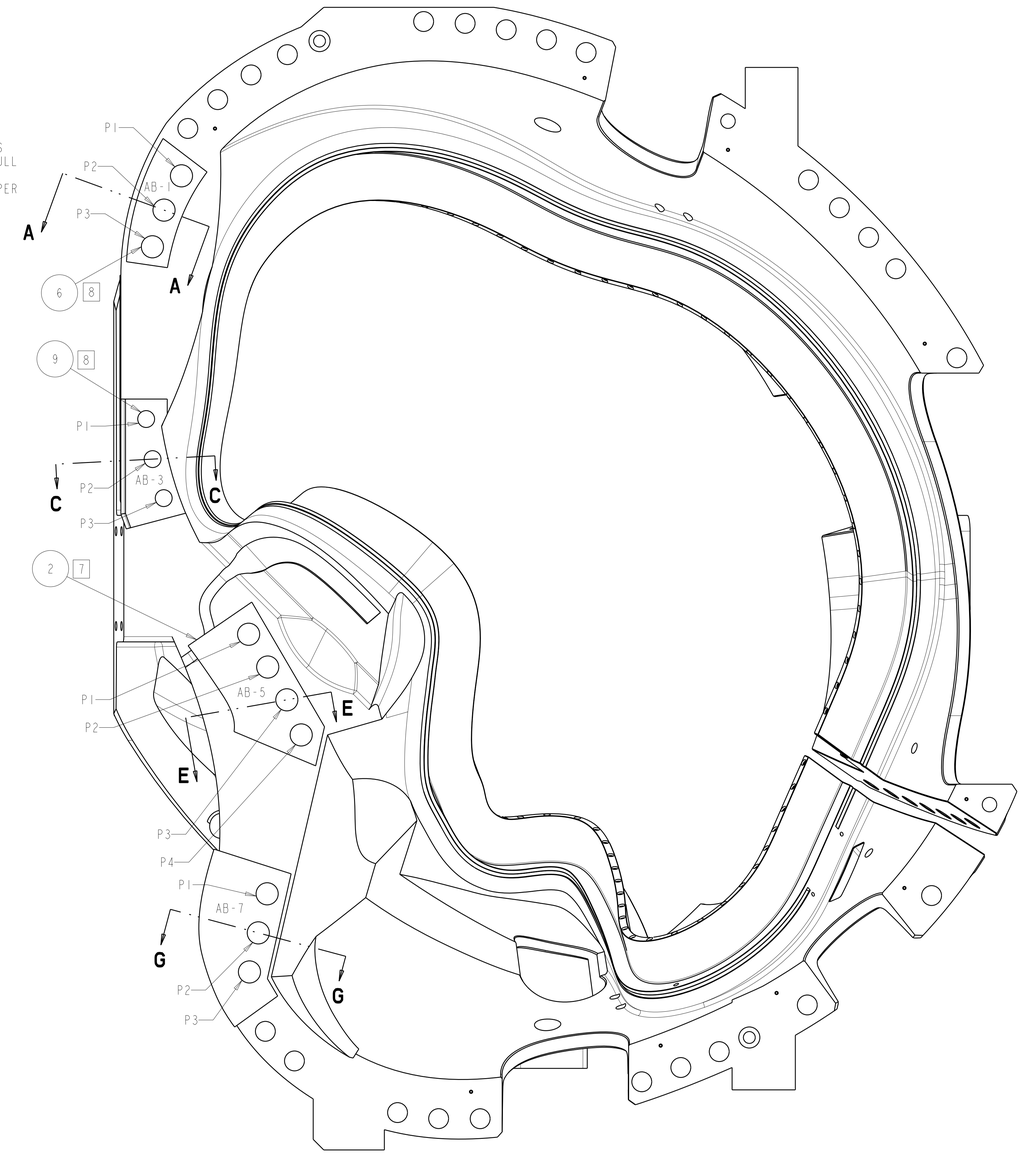

A-B JOINT LOOKING AT THE B COIL A FLANGE
(A COIL REMOVED)

NOTE: MOD COILS SHOW AS PART ONLY FOR CLARITY. SHIMS AND SHEAR PLATES TO BE INSTALLED ON MOD COIL ASSEMBLIES

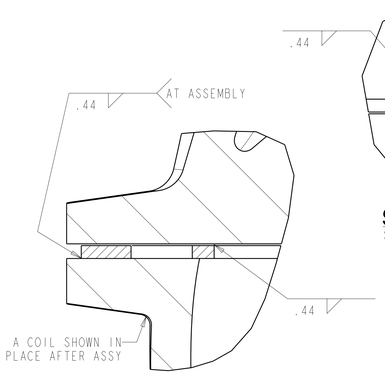

SECTION A-A
SCALE 0.50

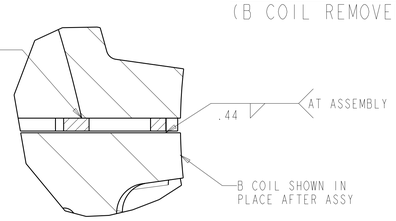

SECTION B-B
SCALE 0.50

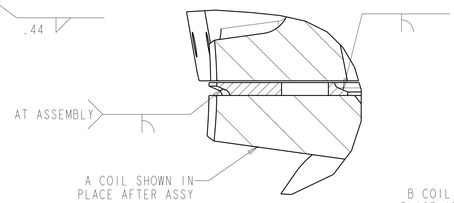

SECTION C-C
SCALE 0.50

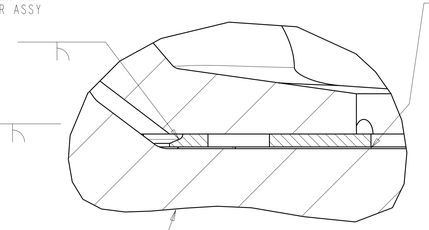

SECTION D-D
SCALE 0.50

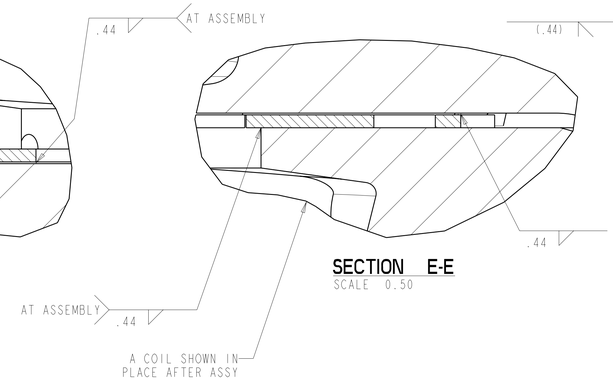

SECTION E-E
SCALE 0.50

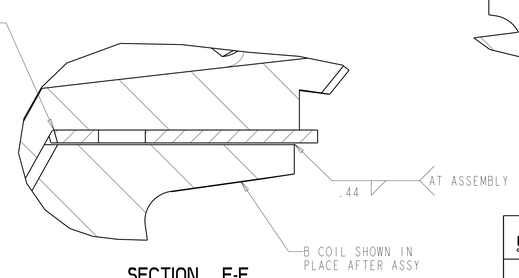

SECTION F-F
SCALE 0.50

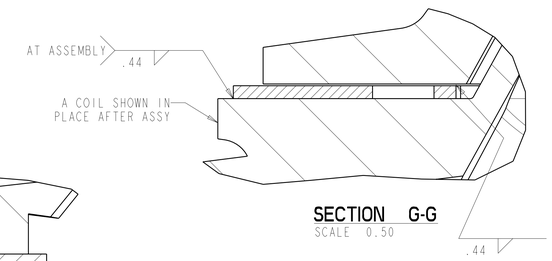

SECTION G-G
SCALE 0.50

RELEASED FOR FABRICATION / INSTALLATION
PPPL Drafting: Jerry Siegel 2008.03.20 13:38:11 -05'00'

UT-BATTELLE
Oak Ridge National Laboratory
managed for the DEPARTMENT OF ENERGY under
U.S. GOVERNMENT contract DE-AC05-00OR22725
UT-BATTELLE, LLC. Oak Ridge, Tennessee

NATIONAL COMPACT STELLARATOR EXPERIMENT

MODULAR COIL SHIM AND SHEAR PLATE LAYOUT

VERSION NO.	PLANT	BLDG	FL	SHT	OF	TYPE	CLASS
28	ORNL	5700	3	2	8	S	U
RELEASE LEVEL: Fabrication	SE140-046						REV 0

SE140-046

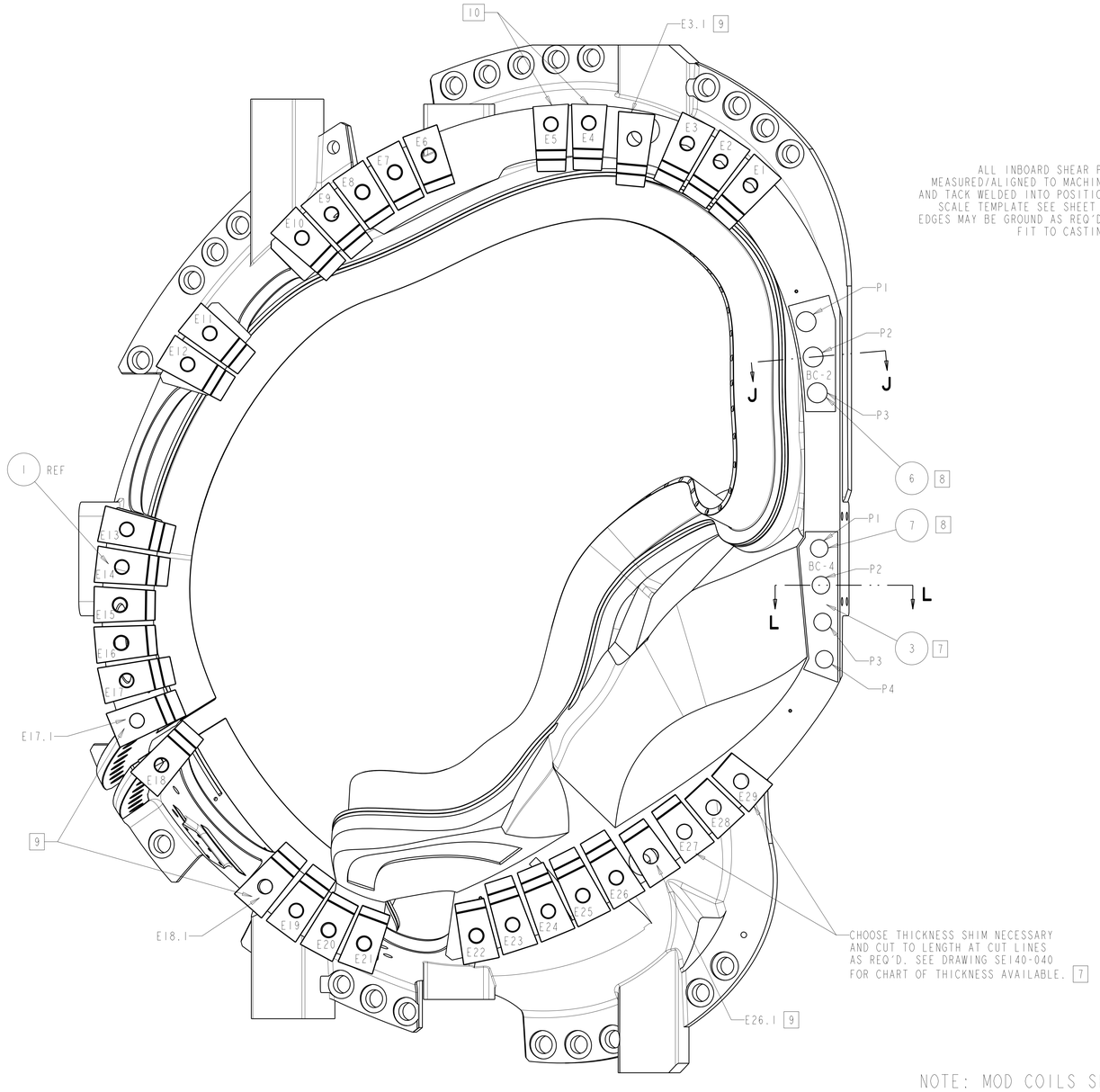

B-C JOINT LOOKING AT THE B COIL C FLANGE
(C COIL REMOVED)

ALL INBOARD SHEAR PLATES TO BE MEASURED/ALIGNED TO MACHINED SUFRACES AND TACK WELDED INTO POSITION. USE FULL SCALE TEMPLATE SEE SHEET 7. OPPOSITE EDGES MAY BE GROUND AS REQ'D FOR PROPER FIT TO CASTING SURFACES.

CHOOSE THICKNESS SHIM NECESSARY AND CUT TO LENGTH AT CUT LINES AS REQ'D. SEE DRAWING SE140-040 FOR CHART OF THICKNESS AVAILABLE. 7

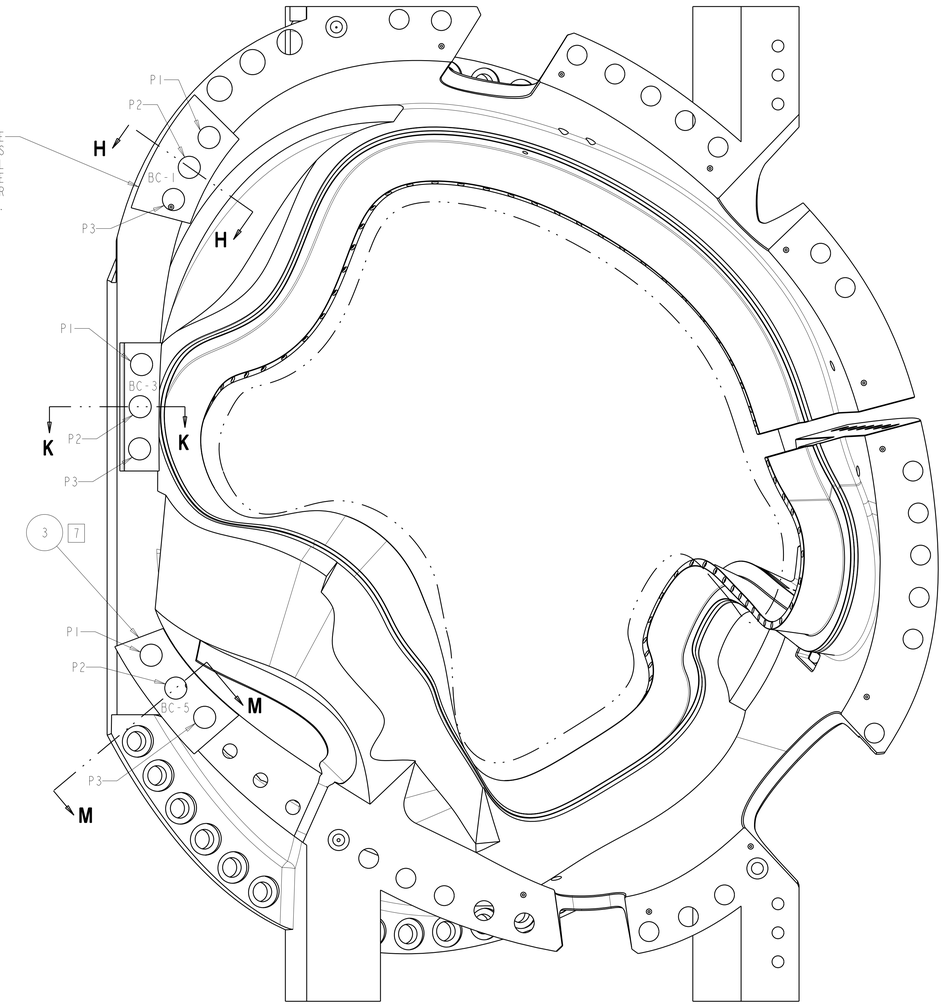

B-C JOINT LOOKING AT THE C COIL B FLANGE
(B COIL REMOVED)

NOTE: MOD COILS SHOW AS PART ONLY FOR CLARITY. SHIMS AND SHEAR PLATES TO BE INSTALLED ON MOD COIL ASSEMBLIES

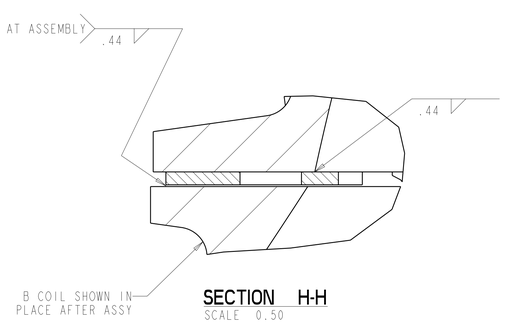

SECTION H-H
SCALE 0.50

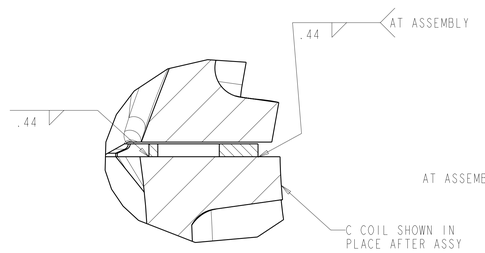

SECTION J-J
SCALE 0.50

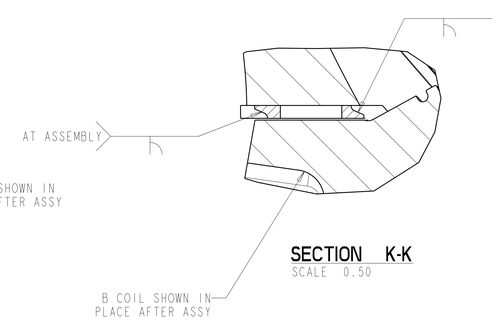

SECTION K-K
SCALE 0.50

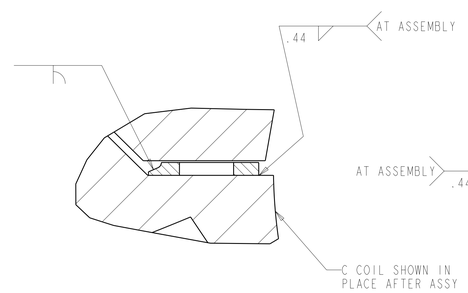

SECTION L-L
SCALE 0.50

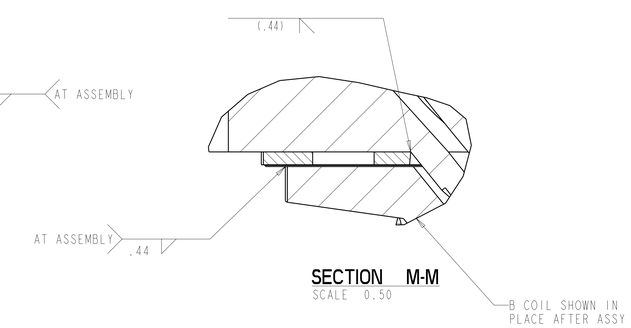

SECTION M-M
SCALE 0.50

RELEASED FOR FABRICATION / INSTALLATION
PPPL Drafting: Jerry Siegel 2008.01.15 15:16:11 -05'00'

UT-BATTELLE
Oak Ridge National Laboratory
managed for the DEPARTMENT OF ENERGY under U.S. GOVERNMENT contract DE-AC05-000R22725
UT-BATTELLE, LLC. Oak Ridge, Tennessee

PROJECT NAME: NATIONAL COMPACT STELLARATOR EXPERIMENT

MODULAR COIL SHIM AND SHEAR PLATE LAYOUT

VERSION NO.	PLANT	BLDG	FL	SHT	OF	TYPE	CLASS
28	ORNL	5700	3	3	8	S	U

RELEASE LEVEL		REV
Fabrication	SE140-046	0

SE140-046

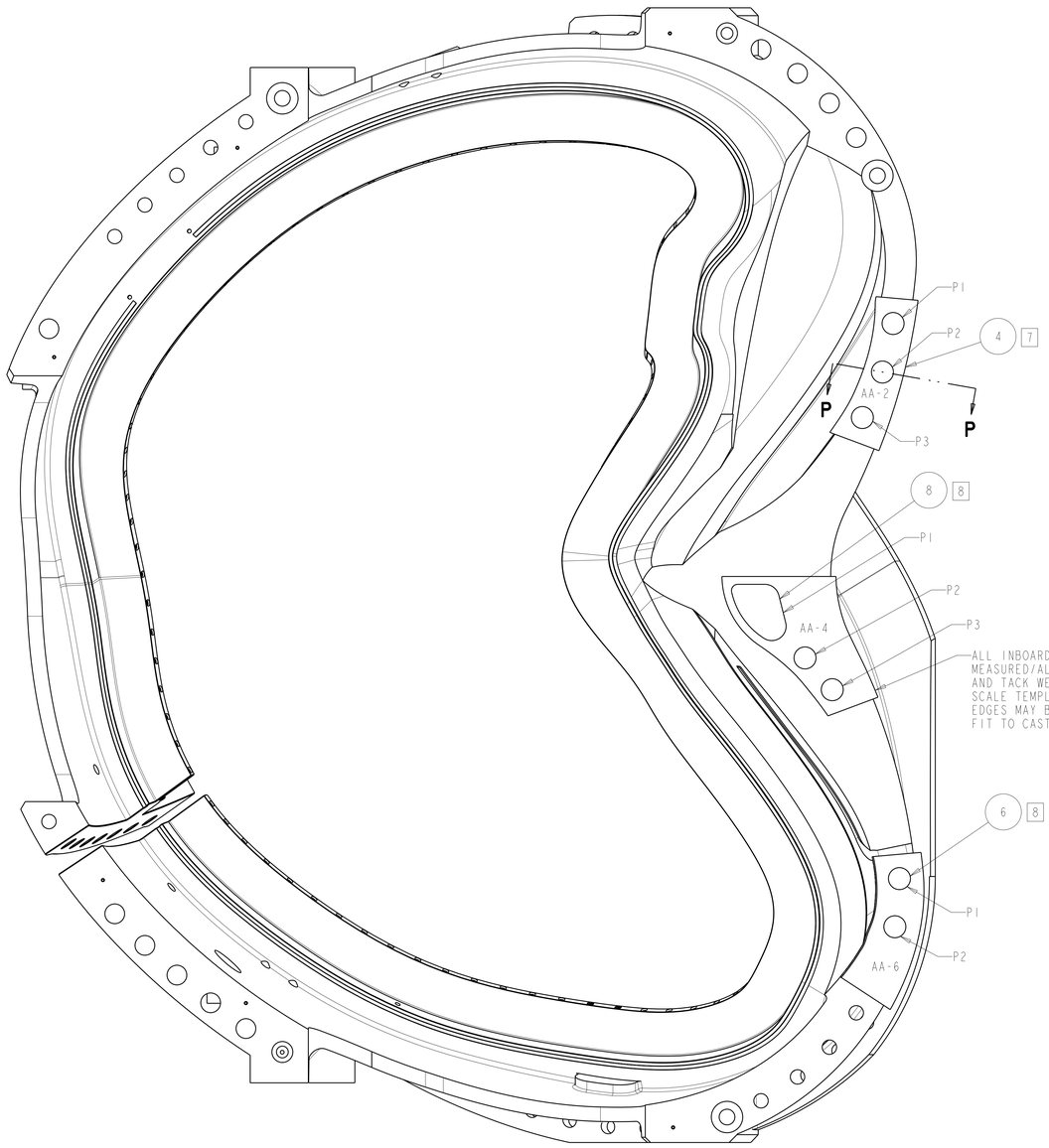

ALL INBOARD SHEAR PLATES TO BE MEASURED/ALIGNED TO MACHINED SUFRACES AND TACK WELDED INTO POSITION. USE FULL SCALE TEMPLATE SEE SHEET 8. OPPOSITE EDGES MAY BE GROUND AS REQ'D FOR PROPER FIT TO CASTING SURFACES.

A-A JOINT LOOKING AT THE A LEFT COIL- A RIGHT FLANGE
(A RIGHT COIL REMOVED)

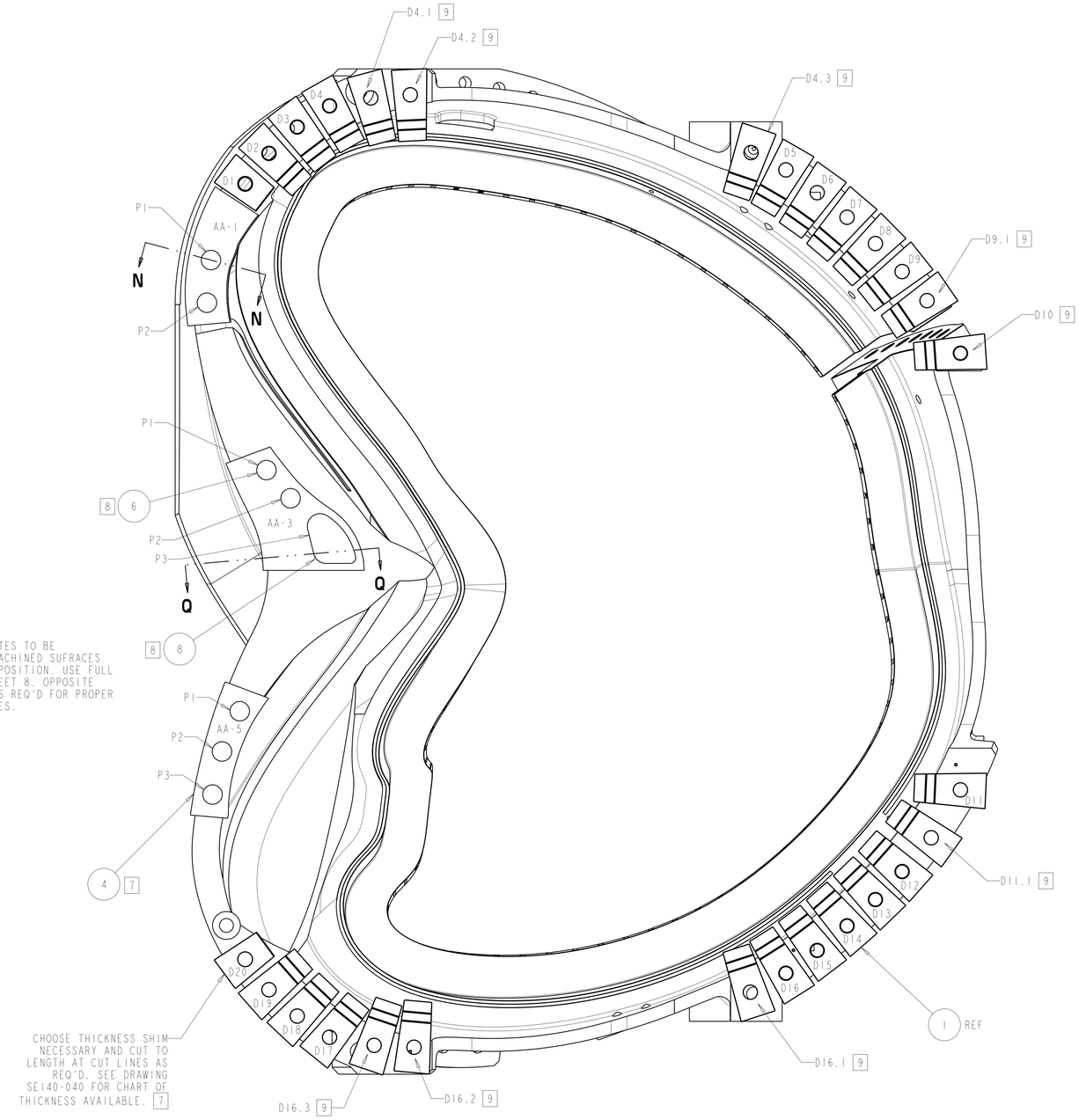

CHOOSE THICKNESS SHIM NECESSARY AND CUT TO LENGTH AT CUT LINES AS REQ'D. SEE DRAWING SE140-040 FOR CHART OF THICKNESS AVAILABLE. 7

A-A JOINT LOOKING AT THE A RIGHT COIL - A LEFT FLANGE
(A LEFT COIL REMOVED)

NOTE: MOD COILS SHOW AS PART ONLY FOR CLARITY. SHIMS AND SHEAR PLATES TO BE INSTALLED ON MOD COIL ASSEMBLIES

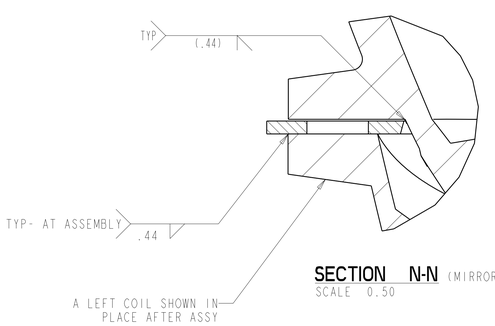

SECTION N-N (MIRROR SECTION FOR AA-6)
SCALE 0.50

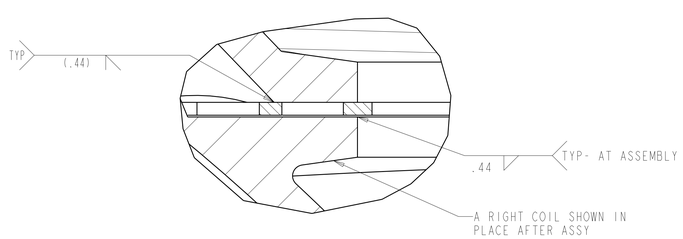

SECTION P-P (MIRROR SECTION FOR AA-5)
SCALE 0.50

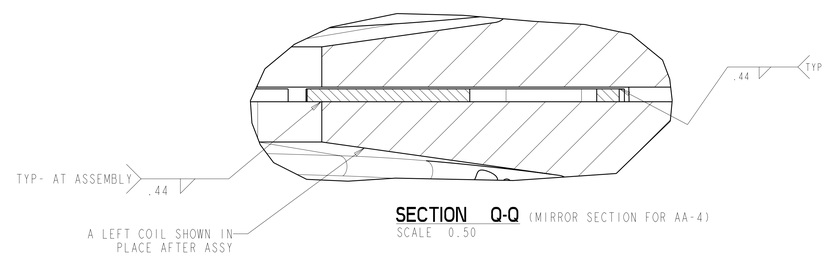

SECTION Q-Q (MIRROR SECTION FOR AA-4)
SCALE 0.50

RELEASED FOR FABRICATION / INSTALLATION
PPPL Drafting: Jerry Siegel 2006.01.15 03:59:11.-06'00'

UT-BATTELLE
Oak Ridge National Laboratory
managed for the DEPARTMENT OF ENERGY under
U.S. GOVERNMENT contract DE-AC05-00OR22725
UT-BATTELLE, LLC. Oak Ridge, Tennessee

PROJECT TITLE
NATIONAL COMPACT STELLARATOR EXPERIMENT

MODULAR COIL SHIM AND SHEAR PLATE LAYOUT

VERSION NO.	PLANT	BLDG	FL	SHT	OF	TYPE	CLASS
28	ORNL	5700	3	4	8	S	U

RELEASE LEVEL		REV
Fabrication	SE140-046	0

SE140-046

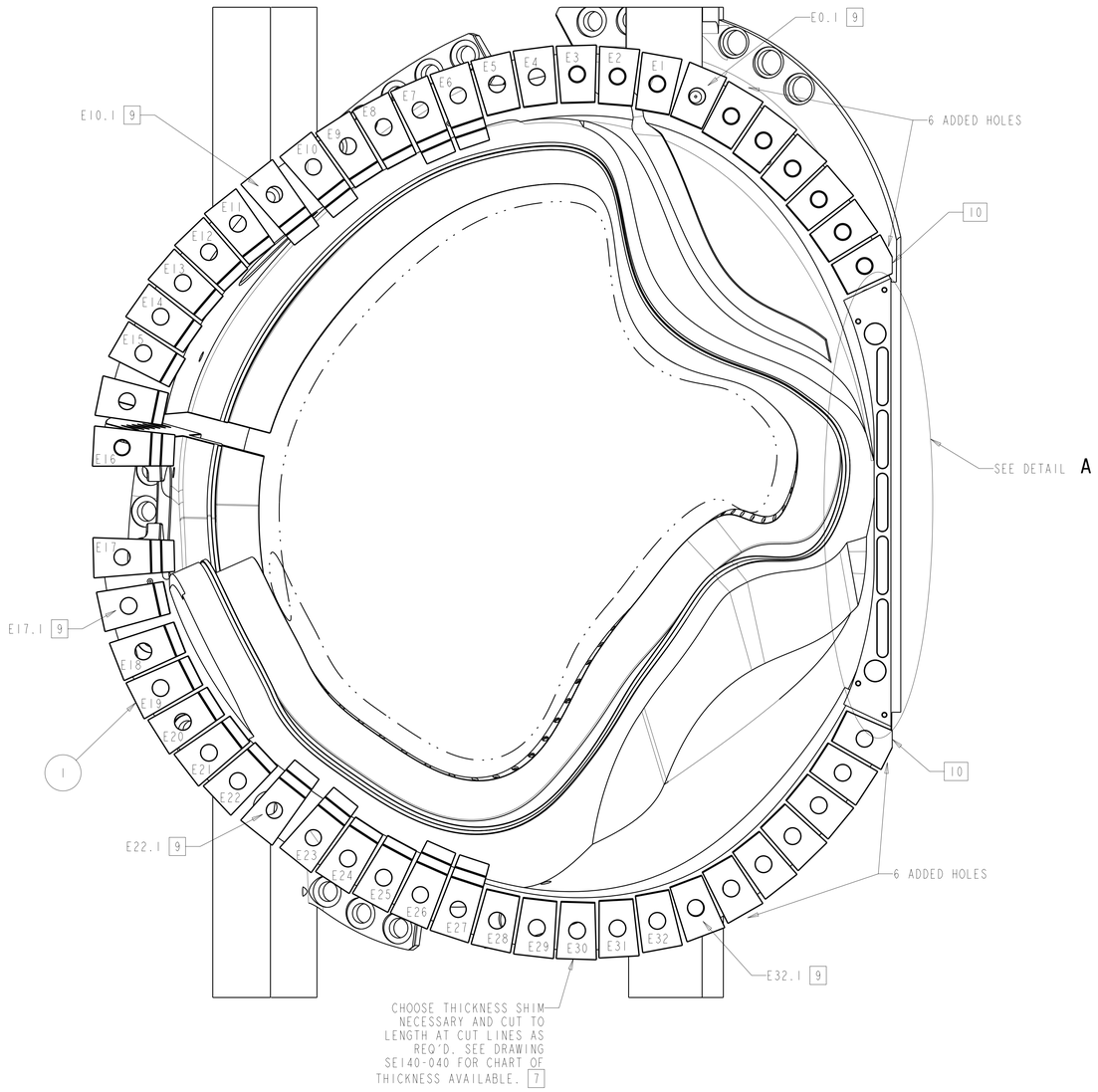

C-C JOINT LOOKING AT THE C LEFT COIL - C RIGHT FLANGE

NOTE: MOD COILS SHOW AS PART ONLY FOR CLARITY.
SHIMS AND SHEAR PLATES TO BE INSTALLED ON
MOD COIL ASSEMBLIES

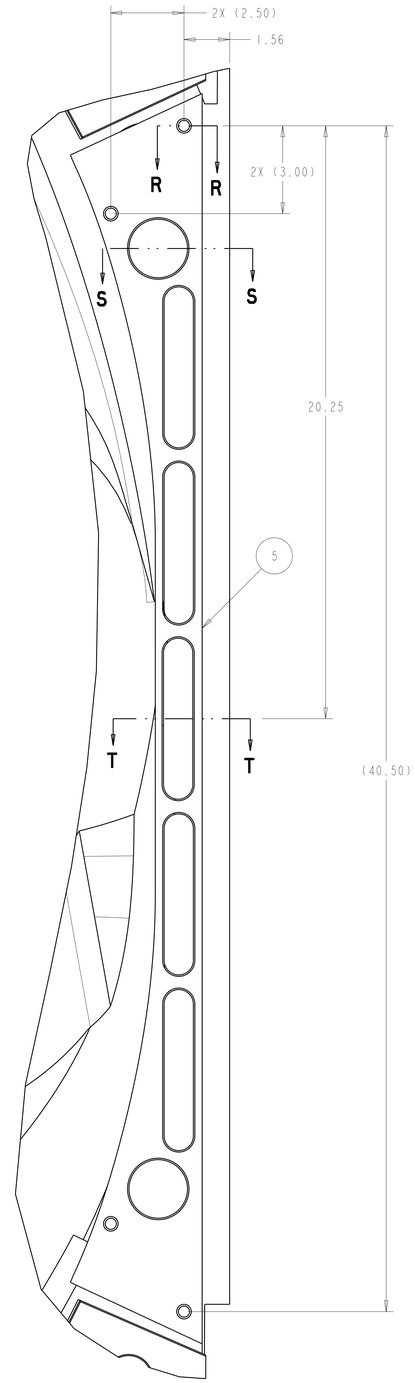

DETAIL A
SCALE 0.50

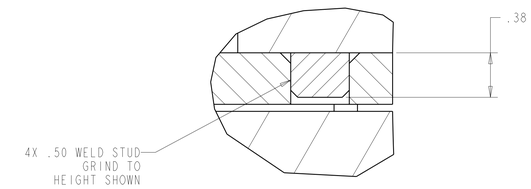

SECTION R-R
SCALE 2.00

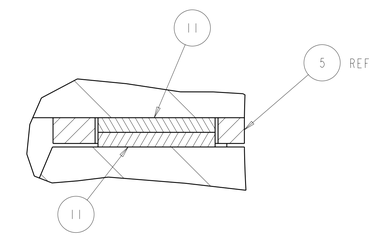

SECTION S-S
SCALE 1.00

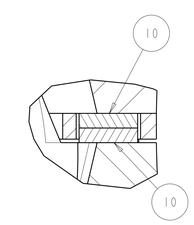

SECTION T-T
SCALE 1.00

RELEASED FOR FABRICATION / INSTALLATION
PPPL Drafting: Jerry Siegel 2008.01.15 15:16:11 -05'00'

UT-BATTELLE
Oak Ridge National Laboratory
managed for the DEPARTMENT OF ENERGY under
U.S. GOVERNMENT contract DE-AC05-00OR22725
UT-BATTELLE, LLC. Oak Ridge, Tennessee

PROJECT NAME
NATIONAL COMPACT STELLARATOR EXPERIMENT

MODULAR COIL SHIM AND SHEAR PLATE LAYOUT

VERSION NO.	PLANT	BLDG	FL	SHT	OF	TYPE	CLASS
28	ORNL	5700	3	5	8	S	U

RELEASE LEVEL		REV
Fabrication	SE140-046	0

SE140-046

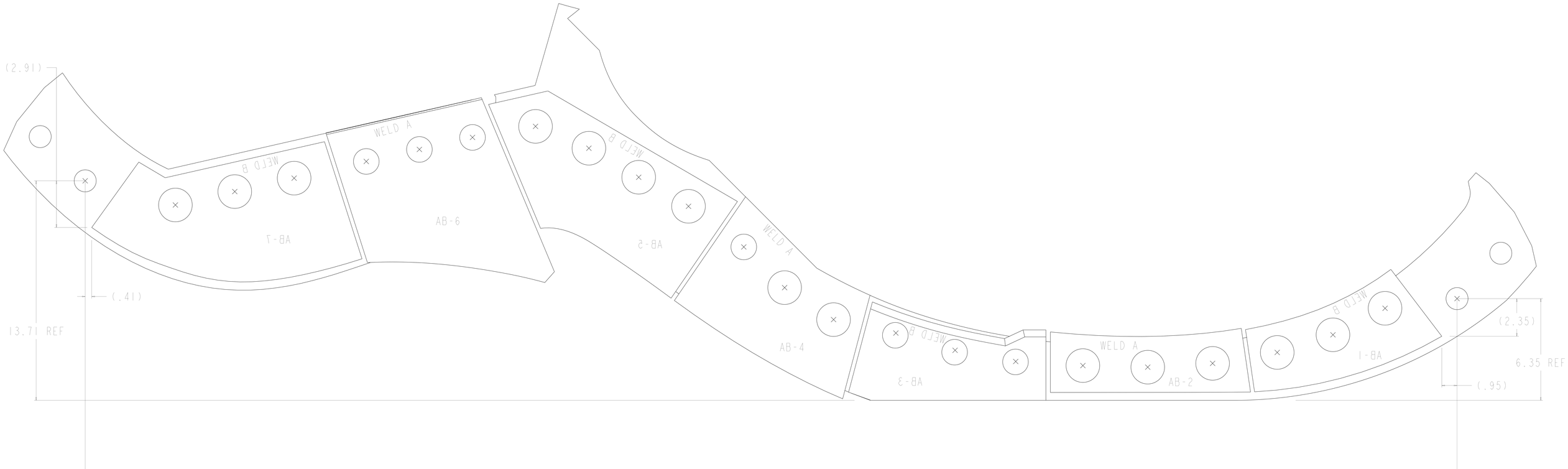

A-B SHEAR PLATE LOCATION TEMPLATE - A COIL B FLANGE

SCALE 1 : 1

CHECK TEMPLATE WITH REF DIMENSIONS
SHOWN TO VERIFY PROPER SCALE

RELEASED FOR
FABRICATION / INSTALLATION
PPPL Drafting: Jerry Siegel

UT-BATTELLE
Oak Ridge National Laboratory
managed by UT-BATTELLE, LLC
for the U.S. DEPARTMENT OF ENERGY
UT-BATTELLE, LLC - Oak Ridge, Tennessee

NATIONAL COMPACT STELLARATOR EXPERIMENT

MODULAR COIL SHIM AND
SHEAR PLATE LAYOUT

CREATED BY	PLANT	BLDG	FY	SHT	OF	TYPE	CLASS
JCD	ORNL	S700	3	6	01	S	10

DRAWING NO.
SE140-046

REVISED DATE
Fabrication

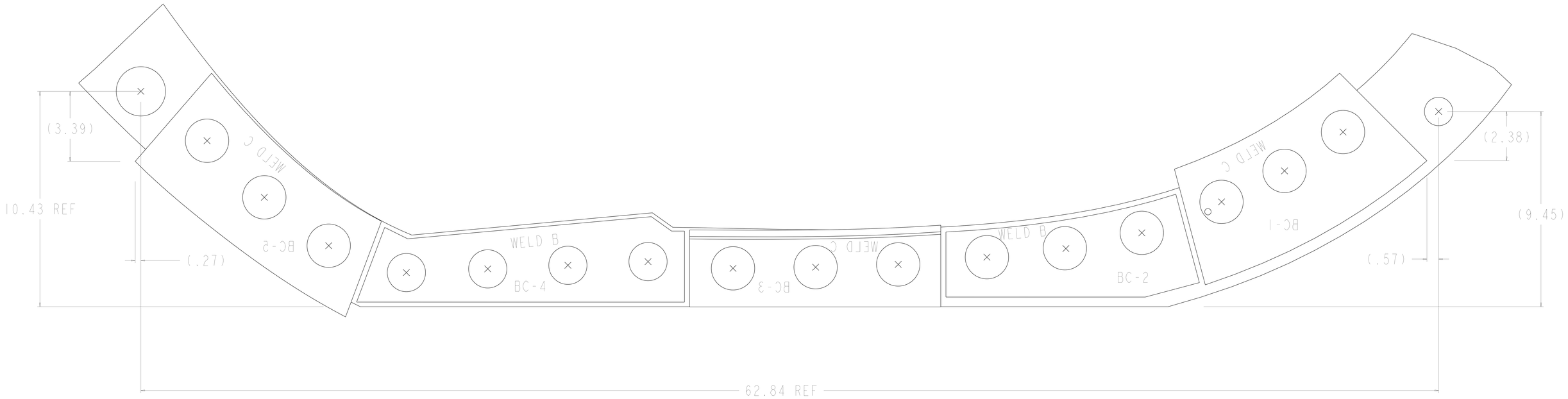

B-C SHEAR PLATE LOCATION TEMPLATE - B COIL C FLANGE

SCALE 1 : 1

CHECK TEMPLATE WITH REF DIMENSIONS
SHOWN TO VERIFY PROPER SCALE

RELEASED FOR
FABRICATION / INSTALLATION
PPPL Drafting: Jerry Siegel 2006.01.15 13:18:11 -0500

UT-BATTELLE
Oak Ridge National Laboratory
managed for the DEPARTMENT OF ENERGY under
contract DE-AC05-00OR22725 by
UT-BATTELLE, LLC Oak Ridge, Tennessee

NATIONAL COMPACT STELLARATOR EXPERIMENT

MODULAR COIL SHIM AND
SHEAR PLATE LAYOUT

VERSION NO.	PLANT	BLDG	FL	SHT	OF	TYPE	CLASS
28	ORNL	5700	3	7	8	S	U

RELEASE LEVEL: Fabrication
SE140-046
REV 0

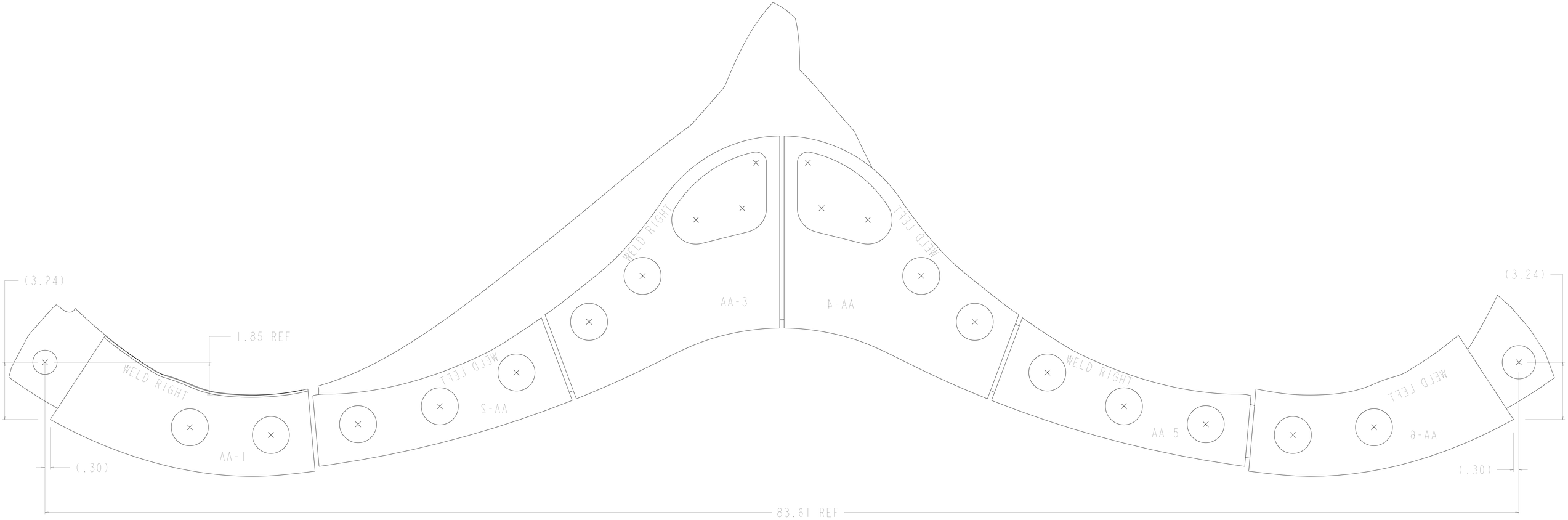

A-A SHEAR PLATE LOCATION TEMPLATE - A RIGHT COIL A LEFT FLANGE

SCALE 1 : 1

RELEASED FOR FABRICATION / INSTALLATION
PPPL Drafting: Jerry Siegel 2008.01.15 15:18:15 -05'00'

CHECK TEMPLATE WITH REF DIMENSIONS
SHOWN TO VERIFY PROPER SCALE

UT-BATTELLE
Oak Ridge National Laboratory
managed for the DEPARTMENT OF ENERGY under
U.S. DEPARTMENT OF ENERGY CONTRACT DE-AC05-00OR22725
UT-BATTELLE, LLC Oak Ridge, Tennessee

NATIONAL COMPACT STELLARATOR EXPERIMENT

MODULAR COIL SHIM AND SHEAR PLATE LAYOUT

VERSION NO.	PLANT	BLDG	FL	SHT	W	TYPE	CLASS
00	ORNL	3700	3	8	8.5	D	N

RELEASE LEVEL: Fabrication

SEI40-046

0