NOTES

1. DRAWING PREPARED IN ACCORDANCE WITH ASME Y14.100-2004.
2. INTERPRET DIMENSIONS AND TOLERANCES PER ASME Y14.5M-1994.
3. DIMENSIONS ARE IN INCHES
4. MAGNETIC PERMEABILITY NOT TO EXCEED 1.02 AS TESTED BY A SEVERN INDICATOR. AVAILABLE FROM:
   SEVERN ENGINEERING
   AUBURN, ALABAMA 36830
   WWW.SEVERNENGINEERING.COM
5. SHIMS TO BE ANNEALED AFTER ALL CUTTING AND GRINDING IF PERMEABILITY SPEC IN NOTE 4 IS NOT MEET
6. SHIMS MAY BE FIELD TRIMMED AS REQUIRED
7. COMPLETED PARTS TO BE CLEAN AND FREE OF ANY OIL, DEBRIS, OR CONTAMINATES.

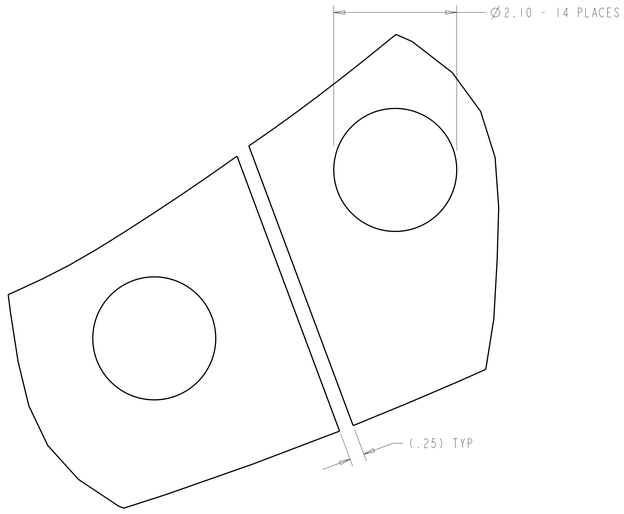

DETAIL A
SCALE 1.00

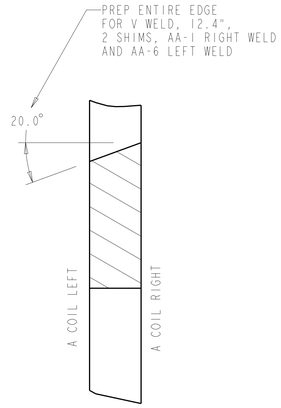

SECTION C-C
SCALE 2.00

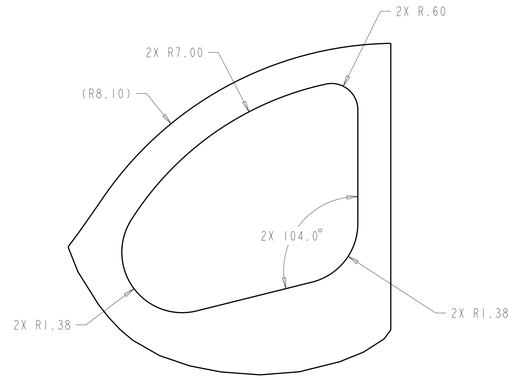

DETAIL B
SCALE 0.75

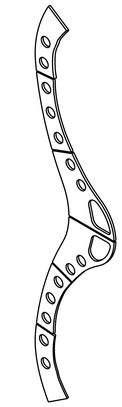

ISOMETRIC VIEW
SCALE 0.10

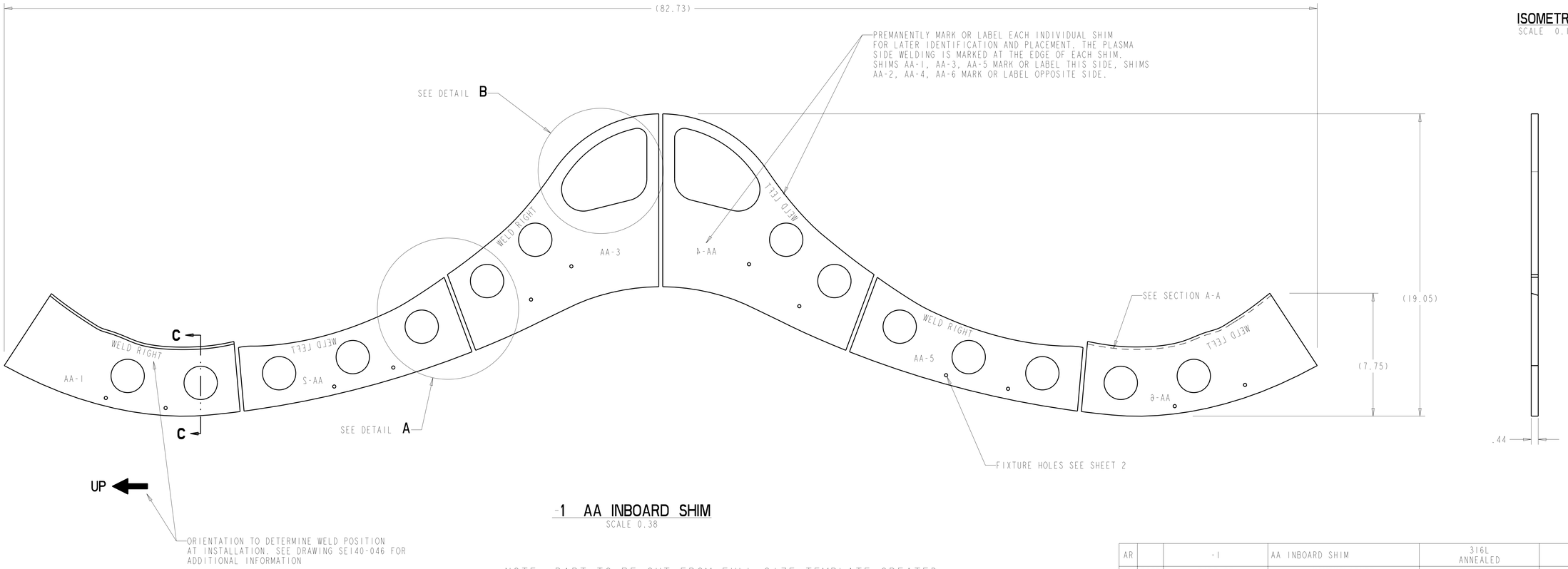

-1 AA INBOARD SHIM
SCALE 0.38

NOTE: PART TO BE CUT FROM FULL SIZE TEMPLATE CREATED BY DXF FILE SE140-054.DXF, SEE SHEET 2.

AR		-1	AA INBOARD SHIM	316L ANNEALED	ASTM A240	1
SE100-003	CAGE CODE	PART OR IDENTIFYING NO	NOMENCLATURE OR DESCRIPTION	MATERIAL	SPECIFICATION	FIND NO
	←	NEXT ASSEMBLY	PARTS LIST			

SE140-054

RELEASED FOR FABRICATION / INSTALLATION
PPPL Drafting: Jerry Siegel 2008.01.08 06:19:11 -05'00'

NO REPRESENTATION OR WARRANTY, EXPRESSED OR IMPLIED, IS MADE AS TO THE ACCURACY, COMPLETENESS OR USEFULNESS OF THE INFORMATION OR STATEMENTS CONTAINED IN THESE DRAWINGS, OR THAT THE USE OR DISCLOSURE OF ANY INFORMATION, APPARATUS, METHOD OR PROCESS DISCLOSED IN THESE DRAWINGS MAY NOT INFRINGE PRIVATE RIGHTS OF OTHERS. NO LIABILITY IS ASSUMED WITH RESPECT TO THE USE OF, OR FOR DAMAGES RESULTING FROM THE USE OF, ANY INFORMATION, APPARATUS, METHOD OR PROCESS DISCLOSED IN THESE DRAWINGS. DRAWINGS MADE AVAILABLE FOR INFORMATION TO BIDDER ARE NOT TO BE USED FOR OTHER PURPOSES, AND ARE TO BE RETURNED UPON REQUEST OF THE FORWARDING CONTRACTOR.

P THIS DRAWING PRODUCED ON PRO-ENGINEER

REV	DESCRIPTION	BY	DATE	CHK	DEPT	DATE	PE	REQ	DATE	ORNL	DOE	DATE
0	ORIGINAL ISSUE	SH	01/08	MC		01/08						

REVISION OR ISSUE PURPOSE — REVISION APPROVAL

SCALE NOTED
TOLERANCES UNLESS OTHERWISE SPECIFIED
FRACTIONS
XX DECIMALS ±.01
XXX DECIMALS ±.005
ANGLES ±0° 15'
BREAK SHARP EDGES .06 MAX
FINISH 125 UNLESS OTHERWISE SPECIFIED

DRAWING APPROVALS		DATE
DES	D WILLIAMSON	01/2008
DRW	S HOMESCU	01/2008
CHK	M COLE	01/2008
SECT	:	:
DEPT	:	:
PE	:	:
CR	:	:
PJ	:	:
REQ	:	:
PPPL DRFT	J SIEGEL	01/2008

UT-BATTELLE
Oak Ridge National Laboratory
managed for the DEPARTMENT OF ENERGY under U.S. GOVERNMENT contract DE-AC05-00OR22725
UT-BATTELLE, LLC. Oak Ridge, Tennessee

PROJECT NAME: NATIONAL COMPACT STELLARATOR EXPERIMENT

A-A INBOARD SHIM

VERSION NO.	PLANT	BLDG	FL	SHT	OF	TYPE	CLASS
20	ORNL	5700	3	1	2	S	U

RELEASE LEVEL: Fabrication — SE140-054 — REV 0

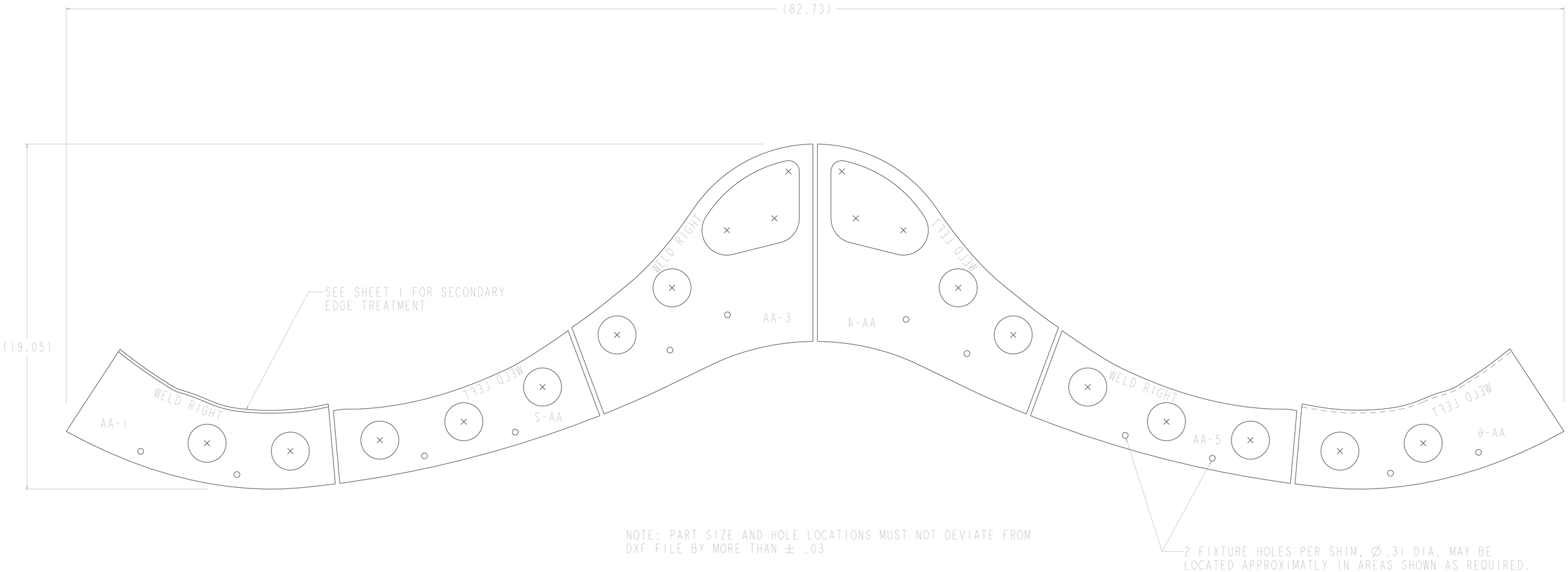

FULL SIZE TEMPLATE - CREATED FROM DXF FILE SE140-054.DXF

SCALE 1 : 1

RELEASED FOR FABRICATION / INSTALLATION

PPPL Drafting: Jerry Siegel 2008.01.08 08:08:15 -05'00'

UT-BATTELLE

Oak Ridge National Laboratory
managed for the DEPARTMENT OF ENERGY (DOE)
by UT-BATTELLE, LLC, a partnership of
the Battelle Memorial Institute
and the Regents of the University of California

NATIONAL COMPACT STELLARATOR EXPERIMENT

A-A INBOARD SHIM

DRAWING NO.	PLANT	BLDG.	FL	SHT	OF	TYPE	CLASS
SE140-054	ORNL	5700	3	2	2	S	II

RELEASE STATUS: Fabrication

REV