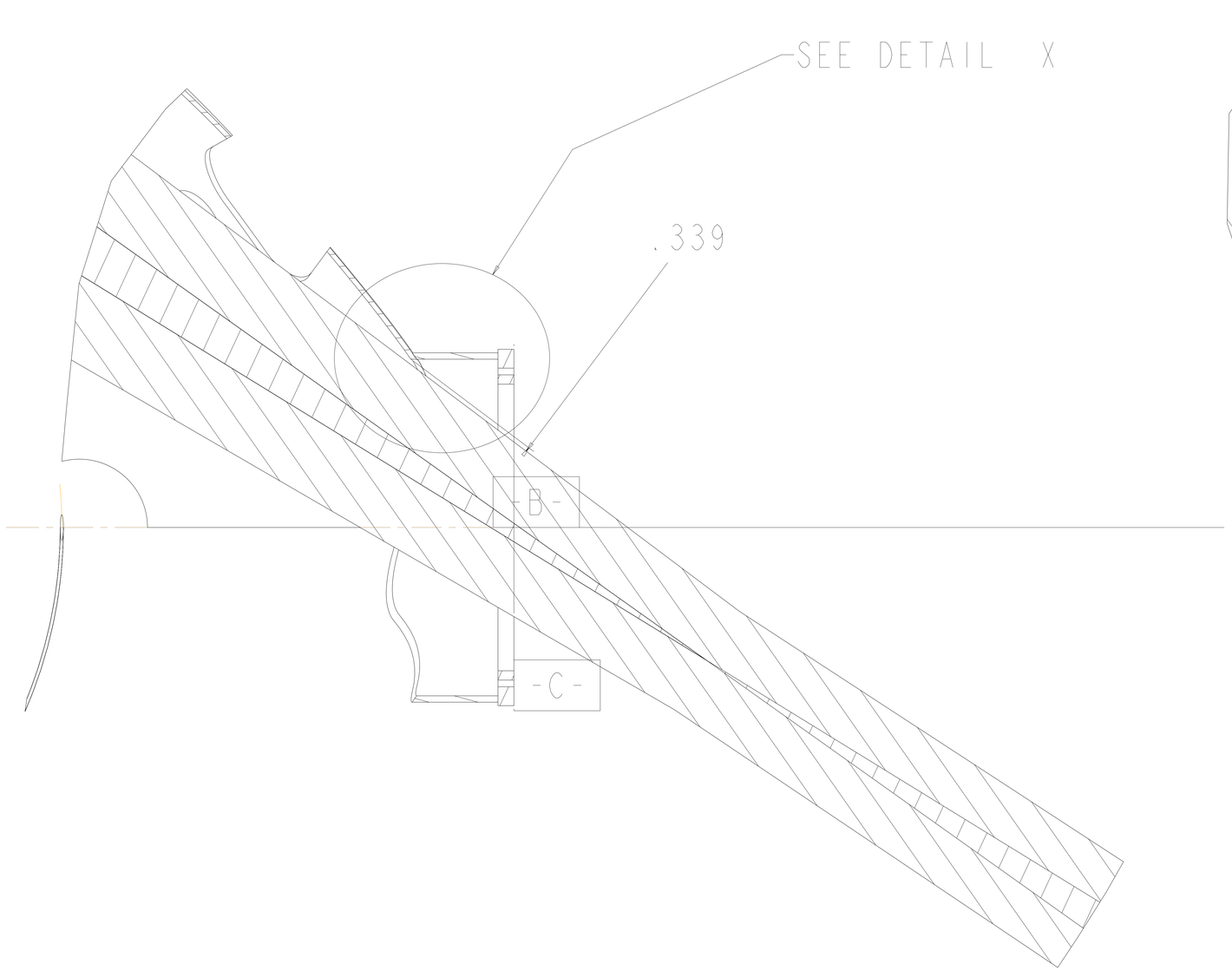

SECTION MID_PLAN-MID_PLAN

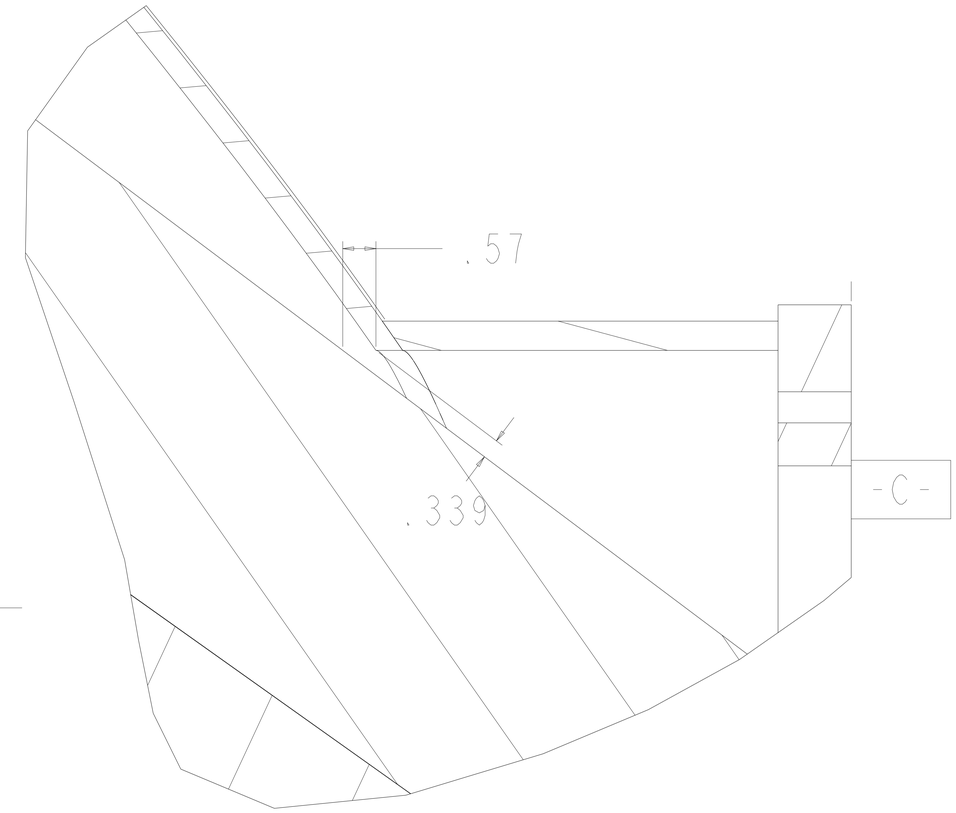

DETAIL X
SCALE 1.000

next assy	CAGE CODE	PART OR IDENTIFYING NO	NOMENCLATURE OR DESCRIPTION	MATERIAL	SPECIFICATION	FIND NO
	1	SMC250-001	NEUTRAL BEAM ASSEMBLY LOCATIONS			4
	1	SMC110-MAG-AXIS	INCREASED LINE STYLE FOR MAG AXIS	--	--	3
	1	SE121-001	VACUUM VESSEL ASSEMBLY	--	--	2
	1	SE100-001	NCSX STELLARATOR CORE ASSEMBLY	--	--	1
	- 1	NEXT ASSEMBLY	PARTS LIST			

SMC100-001-NB

NO REPRESENTATION OR WARRANTY, EXPRESSED OR IMPLIED, IS MADE AS TO THE ACCURACY, COMPLETENESS OR USEFULNESS OF THE INFORMATION OR STATEMENTS CONTAINED IN THESE DRAWINGS, OR THAT THE USE OR DISCLOSURE OF ANY INFORMATION, APPARATUS, METHOD OR PROCESS DISCLOSED IN THESE DRAWINGS MAY NOT INFRINGE PRIVATE RIGHTS OF OTHERS. NO LIABILITY IS ASSUMED WITH RESPECT TO THE USE OF, OR FOR DAMAGES RESULTING FROM THE USE OF, ANY INFORMATION, APPARATUS, METHOD OR PROCESS DISCLOSED IN THESE DRAWINGS. DRAWINGS MADE AVAILABLE FOR INFORMATION TO BIDDER ARE NOT TO BE USED FOR OTHER PURPOSES, AND ARE TO BE RETURNED UPON REQUEST OF THE FORWARDING CONTRACTOR.

P THIS DRAWING PRODUCED ON PRO-ENGINEER

REV	DESCRIPTION (REVISION OR ISSUE PURPOSE)	BY	DATE	CHK	DEPT	DATE	PE	REQ	DATE	ORNL	DOE	DATE

SCALE X X

TOLERANCES UNLESS OTHERWISE SPECIFIED
FRACTIONS :
XX DECIMALS ±.01
XXX DECIMALS ±.005
ANGLES ±0°15'
BREAK SHARP EDGES .06 MAX
FINISH 125 UNLESS OTHERWISE SPECIFIED

DRAWING APPROVALS		DATE
DES	XX	XX
DRW	XX	XX
CHK	:	:
SECT	:	:
DEPT	:	:
PE	:	:
CR	:	:
PJ	:	:
REQ	:	:
PPPL DRFT	:	:
	:	:

UT-BATTELLE

Oak Ridge National Laboratory
managed for the DEPARTMENT OF ENERGY under
U.S. GOVERNMENT contract DE-AC05-00OR22725
UT-BATTELLE, LLC. Oak Ridge, Tennessee

PROJECT NAME
NATIONAL COMPACT STELLARATOR EXPERIMENT

XX
XX
XX

VERSION NO.	PLANT	BLDG	FL	SHT	OF	TYPE	CLASS
proj_version:0	XX	XX	XX	1	2	XX	XX

RELEASE LEVEL		REV
WIP	SMC100-001-NB	XX