NOTES:

1. INTERPRET DIMENSIONS AND TOLERANCES PER ANSI Y14.5M
2. DIMENSIONS ARE IN INCHES
3. DIMENSIONS APPLY AT ROOM TEMPERATURE, OPERATING TEMP 80 K
4. GEOMETRY IS DEFINED IN PRO ENGINEER CAD MODELS/FILES
5. DRAWING AND MODELS COMBINED DEFINE FINISHED MACHINED PART

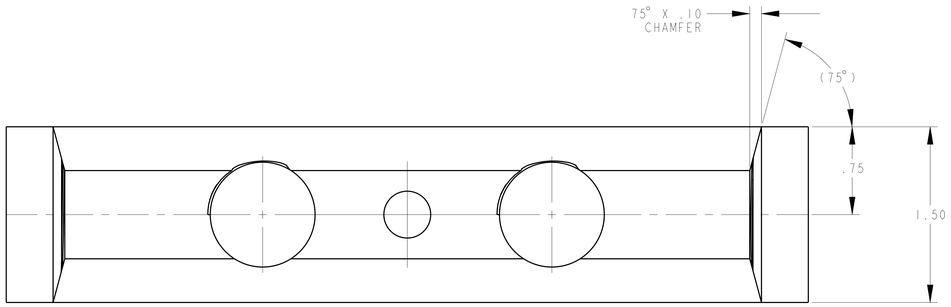

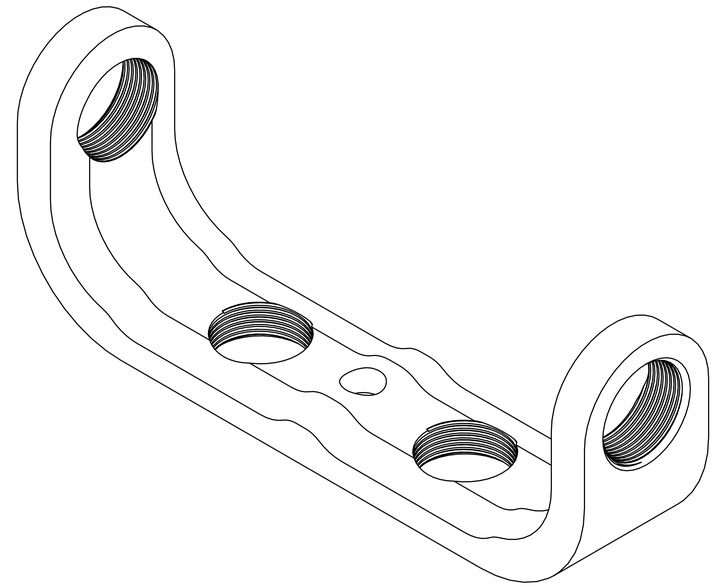

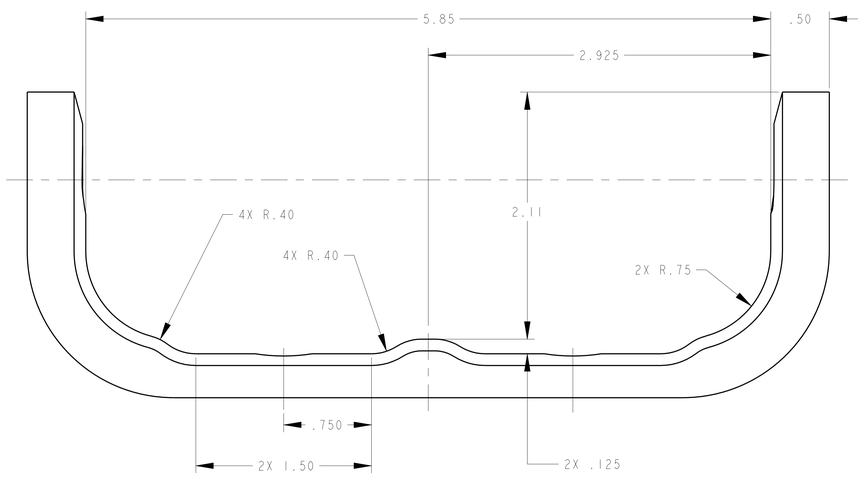

1

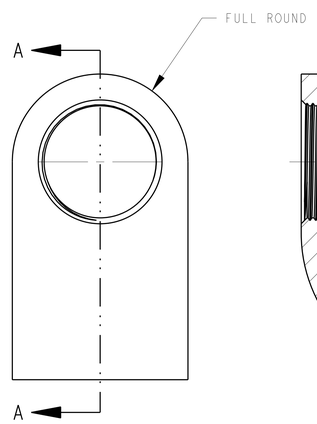

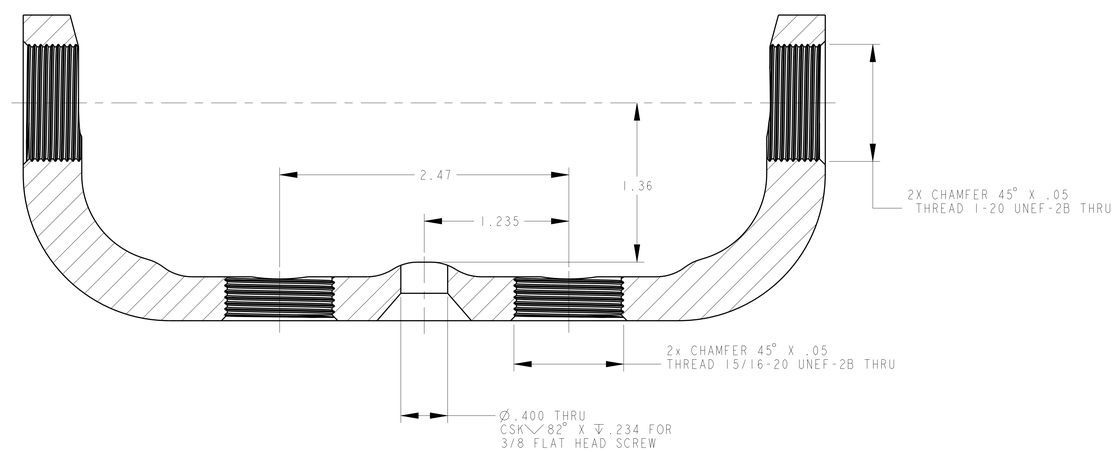

SECTION A-A

AR		SE1405-254P	BAR, CLAMP, HORIZONTAL	316L SS	--	1
SE1405-250	CAGE CODE	PART OR IDENTIFYING NO	NOMENCLATURE OR DESCRIPTION	MATERIAL	SPECIFICATION	FIND NO
		NEXT ASSEMBLY	PARTS LIST			

SE1405-254P

NO REPRESENTATION OR WARRANTY, EXPRESSED OR IMPLIED, IS MADE AS TO THE ACCURACY, COMPLETENESS OR USEFULNESS OF THE INFORMATION OR STATEMENTS CONTAINED IN THESE DRAWINGS, OR THAT THE USE OR DISCLOSURE OF ANY INFORMATION, APPARATUS, METHOD OR PROCESS DISCLOSED IN THESE DRAWINGS MAY NOT INFRINGE PRIVATE RIGHTS OF OTHERS. NO LIABILITY IS ASSUMED WITH RESPECT TO THE USE OF, OR FOR DAMAGES RESULTING FROM THE USE OF, ANY INFORMATION, APPARATUS, METHOD OR PROCESS DISCLOSED IN THESE DRAWINGS. DRAWINGS MADE AVAILABLE FOR INFORMATION TO BIDDER ARE NOT TO BE USED FOR OTHER PURPOSES, AND ARE TO BE RETURNED UPON REQUEST OF THE FORWARDING CONTRACTOR.

P THIS DRAWING PRODUCED ON PRO-ENGINEER

REV	DESCRIPTION (REVISION OR ISSUE PURPOSE)	BY	DATE	CHK	DEPT	DATE	PE	REQ	DATE	ORNL	DOE	DATE

SCALE 2

TOLERANCES UNLESS OTHERWISE SPECIFIED
FRACTIONS
XX DECIMALS ±.01
XXX DECIMALS ±.005
ANGLES ±0° 15'
BREAK SHARP EDGES .06 MAX
FINISH 125 UNLESS OTHERWISE SPECIFIED

DRAWING APPROVALS		DATE
DES	PAUL MILLER	4-12-04
DRW	PAUL MILLER	4-14-04
CHK	Doug Sparks (DOW-RS-27-07-WA3)	
SECT		
DEPT		
PE	David Williamson (DOW-RS-27-07-WC30)	
CR		
PJ		
REQ		
PPPL DRFT		

UT-BATTELLE

Oak Ridge National Laboratory
managed for the DEPARTMENT OF ENERGY under
U.S. GOVERNMENT contract DE-AC05-000R22725
UT-BATTELLE, LLC. Oak Ridge, Tennessee

PROJECT NAME: NATIONAL COMPACT STELLARATOR EXPERIMENT

BAR, CLAMP, HORIZONTAL

VERSION NO.	PLANT	BLDG	FL	SHT	OF	TYPE	CLASS
3	X-10	5700	3	1	1	S	U

RELEASE LEVEL		REV
WIP	SE1405-254P	0