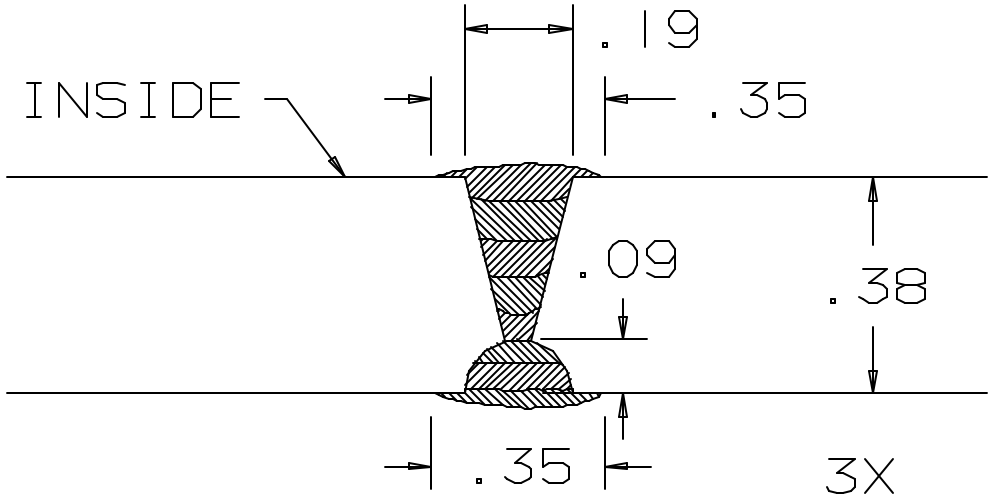
.19
INSIDE
.35
.09
.38
.35
3X