Statement of Work

NCSX Modular Coil Winding Form

Manufacturing Development and Prototype Fabrication

NCSX-SOW-141-01-02

January 24, 2003

Prepared By: _____ 2003.01.28 12:22:10 -05'00'
P. Heitzenroeder, Technical Representative for Modular Coil (WBS 14) Procurements

Concurred By: _____ 2003.01.28 12:32:40 -05'00'
D. Williamson, WBS Manager for Modular Coils (WBS 14)

Concurred By: _____ 2003.01.28 13:58:24 -05'00'
B. Nelson, Project Engineer for Stellarator Core Systems (WBS 1)

Concurred By: _____
F. Malinowski, PPPL Procurement QA Representative

Approved by: _____ 2003.01.28 16:38:48 -05'00'
W. Reiersen, NCSX Engineering Manager

Controlled Document

This is a controlled document. Check the NCSX Procurement Web prior to use to assure that this document is current.

REVISIONS

Revision No.	Description of Change	Date
Rev. 0	All	10/15/02
Rev. 1	Added Section 4.2 on earned value reporting	10/18/02
Rev. 2	Reformatted per NCSX standards Updated prototype spec reference (NCSX-CSPEC-141-01-01 to NCSX-CSPEC-141-01-01) throughout Added a task for manufacturing evaluation of candidate design features (new 2.1.3) in place of copper cladding development samples (old 2.1.3). Added a caveat that the coil type for the prototype might change, after discussions with the Subcontractor (2.7).	1/24/03

Table of Contents

1 GENERAL INFORMATION 1

1.1 INTRODUCTION 1

1.2 BACKGROUND 1

1.3 SCOPE 5

1.4 APPLICABLE DOCUMENTS 5

2 WORK REQUIREMENTS 6

2.1 TECHNICAL 6

2.1.1 Manufacturing Methods for the Three Winding Form Shapes 6

2.1.2 Alloy Selection 6

2.1.3 Manufacturing Evaluation of Candidate Design Features 6

2.1.4 Mold Fabrication 6

2.1.5 Flow Solidification / Distortion Analyses 7

2.1.6 Casting details 7

2.1.7 Post-Casting Processing 7

2.1.7.1 Non-Destructive Testing 7

2.1.7.2 Dimensional inspection and verification 7

2.1.7.3 Winding Form Repairs 7

2.1.7.4 Heat Treatment 7

2.1.7.5 Machining and Final Finishing 7

2.1.7.6 Final Inspection 8

2.2 SUBCONTRACTOR'S RECOMMENDATIONS 8

2.3 ADDITIONAL MANUFACTURING DEVELOPMENT ACTIVITIES 8

2.4 PRELIMINARY MANUFACTURING / INSPECTION / TEST (MIT) AND QUALITY ASSURANCE (QA) PLANS FOR PRODUCTION COILS 8

2.5 BUDGETARY COST AND SCHEDULE ESTIMATE 8

2.6 PROCESSING PLANS FOR PROTOTYPE 8

2.7 PROTOTYPE MANUFACTURE 9

2.8 FINAL MIT AND QA PLANS FOR PRODUCTION WINDING FORMS 9

2.9 FIRM FIXED PRICE AND SCHEDULE PROPOSAL 9

3 QUALITY ASSURANCE 9

3.1 INSPECTION/ SURVEILLANCE/AUDIT BY PPPL 9

3.2 SUBCONTRACTOR'S RESPONSIBILITY FOR CONFORMANCE 10

3.3 SUBCONTRACTOR'S QUALITY ASSURANCE PROGRAM 10
3.4 PROCESSING PLANS 10
3.4.1 MIT Plan 10
3.4.2 QA Plan 11
3.5 INSPECTION AND TEST PROCEDURES 11
3.6 DOCUMENT TRACEABILITY AND RECORDS 11
3.7 EQUIPMENT/MATERIAL IDENTIFICATION AND STATUS 11
3.8 CALIBRATION OF TEST AND MEASURING EQUIPMENT 11
3.9 CONTROL OF SPECIAL PROCESSES 12
3.10 RELEASE FOR SHIPMENT FORM 12
3.11 PROCESS HISTORY 12
3.11.1 Material Certifications 12
3.11.2 Inspection and Test Reports 12
3.11.3 Repair Documentation 12
3.12 PPPL RECEIVING AND INSPECTION 13

4 DELIVERABLES 13

4.1 WEEKLY REPORTS 13
4.2 EARNED VALUE REPORTING 13
4.3 TECHNICAL REPORTS 13
4.4 PROTOTYPE PROCESSING PLANS 14
4.5 PRELIMINARY PRODUCTION PROCESSING PLANS 14
4.6 PROTOTYPE WINDING FORM 14
4.7 PRODUCTION PROCESSING PLANS 14
4.8 DOCUMENTATION 14
4.9 TOOLING 14

1 GENERAL INFORMATION

1.1 INTRODUCTION

Stellarators are a class of magnetic fusion confinement devices characterized by three dimensional magnetic fields and plasma shapes and are the best-developed class of magnetic fusion devices after the tokamak. The stellarator concept has greatly advanced since its invention by Dr. Lyman Spitzer, the founding director of the Princeton Plasma Physics Laboratory (PPPL), during the 1950's. A traditional stellarator uses only external magnetic fields to shape and confine the plasma. The National Compact Stellarator Experiment (NCSX) is the first of a new class of stellarators known as "compact stellarators." The differentiating feature of a compact stellarator is the use of plasma current in combination with external fields to accomplish shaping and confinement. This combination permits a more compact device. The NCSX project is managed by PPPL in partnership with the Oak Ridge National Laboratory. This Subcontract will be administered by PPPL. Operation of NCSX is scheduled to begin in July 2007.

In preparation for fabrication of critical components, PPPL is initiating manufacturing development activities. This Statement of Work is for one of these activities - the coil winding forms, which are described below.

1.2 BACKGROUND

Figure 1 is a sectional view of the NCSX device showing its major components. Note the modular coil set with an integral shell; the stainless steel winding forms that comprise this shell are the subjects of this SOW.

The modular coil windings are shown in Figure 2 without their associated winding forms to permit the complex shape of the windings to be more readily seen. There are three distinct shapes; six of each make up the complete modular coil set. To fabricate these windings to the precise shapes required, stranded copper cable conductor is wound on the machined stainless steel winding forms, as shown in Figure 3. In addition to defining the shape of the coils, the winding forms also provide the strong structural support necessary to react electromagnetic loads as high as 7000 lbs. / in. Figure 4 shows the final assembly of the NCSX modular coil set.

Note: Figures in this section are only for illustration and should not be used in the performance of this Scope of Work.

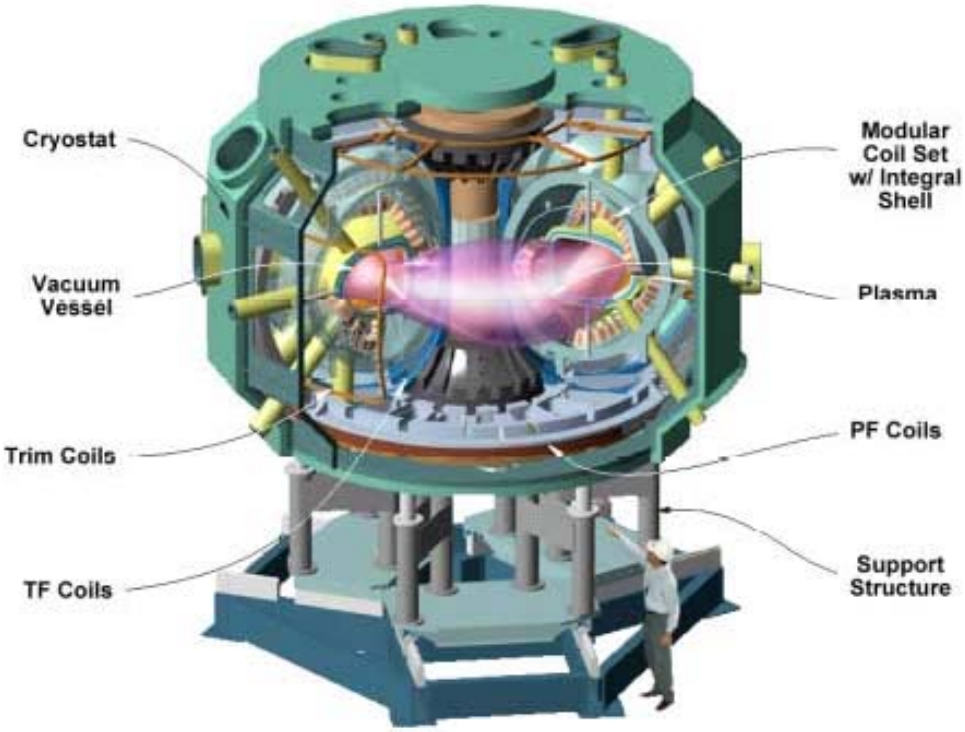

Figure 1 - The NCSX Device and Definition of its Major Components

Note in particular the Modular Coil Set with Integral Shell. This integral shell is comprised of the (18) winding forms that are the subject of this SOW. A typical winding form is shown in Figure 3.

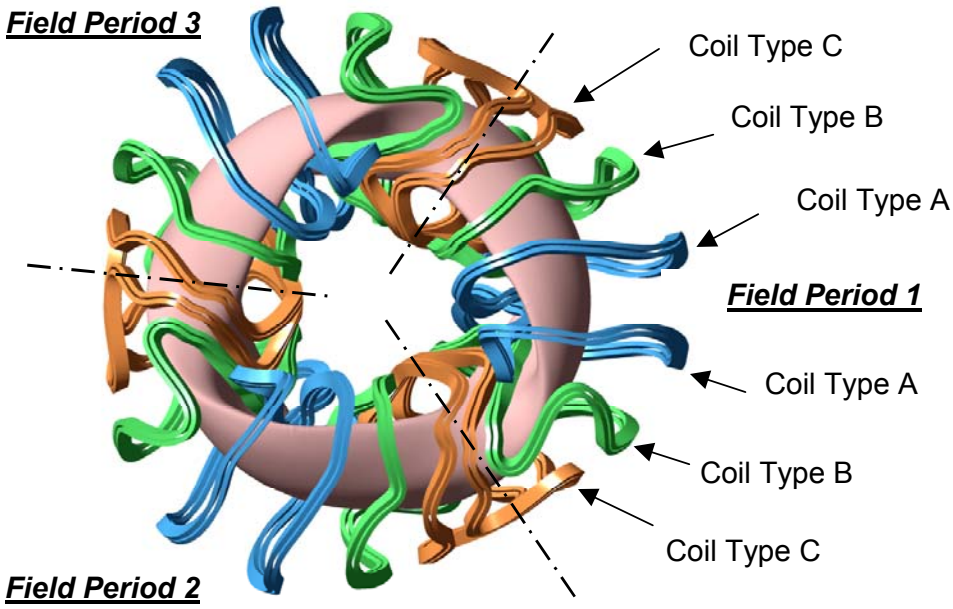

A. Top view, identifying coil shapes.

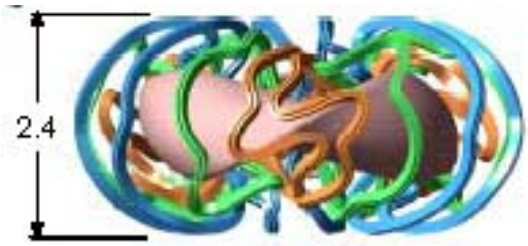

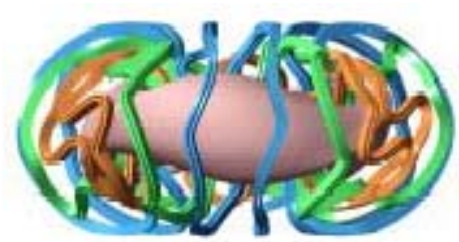

B. Side view at split line between periods **C. Side view looking into Type A coils**

Figure 2 - NCSX modular coil windings

The windings are shown without their associated winding forms so their complex shapes can be easily seen. In order to manufacture these windings to their precise shapes, stranded copper conductor is wound on the machined winding forms (shown in Figure 3), which are the subject of this Statement of Work. Six of each of the three winding form shapes are required. (Dimensions in meters)

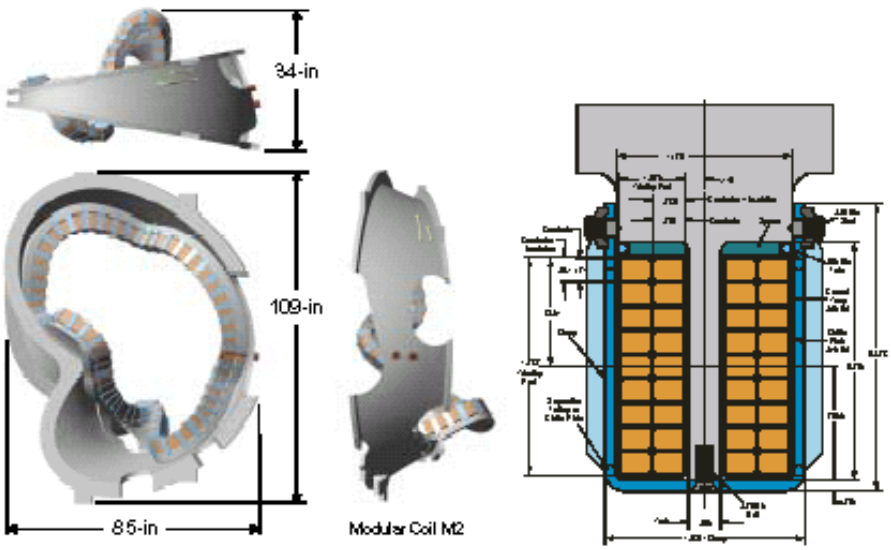

Figure 3 - Modular coil details

Shown is one of the three winding form shapes. The right view shows a sectional view of the form with the stranded cables conductors wound in place on both sides of the "T" section. The winding form serves two very important functions: it defines the precise shape of the winding and provides the required structural support.

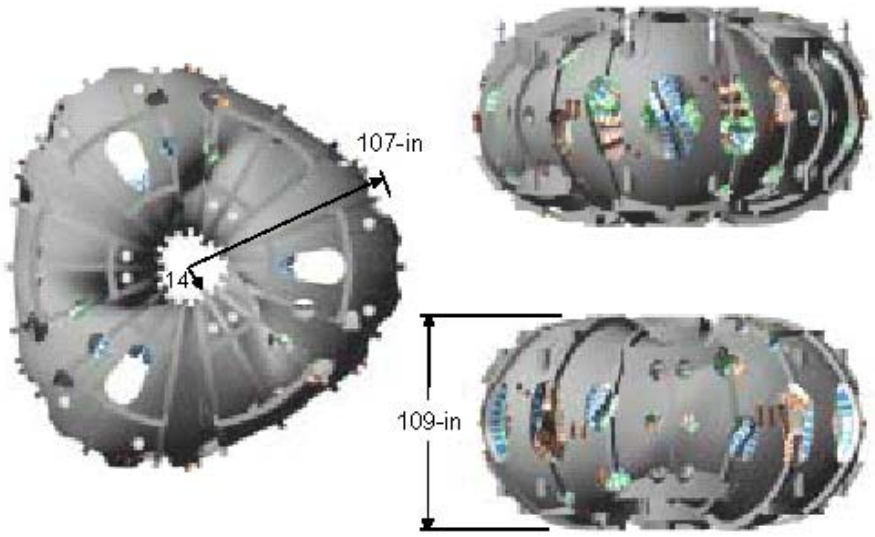

Figure 4 - Final assembly of the NCSX modular coil set

Shown above is the final assembly of the eighteen modular coils (six each of three coil shapes).

1.3 SCOPE

The scope of this SOW includes manufacturing development for all three winding form shapes, the production of a full-scale prototype of one winding form, and, based on these activities, a firm fixed price and schedule proposal for the eighteen production castings. The SOW tasks focus on the difficult aspects of manufacturing these shapes: tolerance control; maintenance of low magnetic permeability; machining of the complex geometry; control of distortion during heat treatment; and timely, low-cost fabrication. The production of the full-scale prototype is meant to give the Subcontractor the experience needed to develop and submit a firm fixed price and schedule proposal as a final deliverable of this effort.

1.4 APPLICABLE DOCUMENTS

Product Specification for the Prototype Modular Coil Winding Form (NCSX-CSPEC-141-01-01) is the complete specification for the prototype modular coil winding form. The current release of this specification (Rev. 1), to be used until a revised version is provided, is available on the PPPL Procurement Web. A revised version will be provided prior to the start of prototype fabrication. The specification identifies applicable Pro/Engineer drawings and models that define the geometry of the prototype modular coil winding form. Preliminary drawings and models of the prototype winding form, to be used until revised drawings and models are provided, are currently available on the PPPL FTP server. Currently, the exact shapes of the coil windings are being optimized. The changes are expected to be minor with respect to manufacturing issues; bend radii and tolerances will not be changed. The only change expected in the specification will be to revise the file names of the drawings and models for the optimized shapes. Drawings and models that are released for prototype fabrication will be provided prior to the start of prototype fabrication.

Product Specification for the Modular Coil Winding Forms (NCSX-CSPEC-141-02-00) will be the complete specification for the modular coil winding forms. The initial version of this specification, which will be similar in content to the specification for the prototype modular coil winding form (NCSX-CSPEC-141-01-01), will be provided on or about March 15. A revised version will be provided prior to the Subcontractor providing a firm fixed price bid and schedule proposal. The specification identifies applicable Pro/Engineer drawings and models that define the geometry of the modular coil winding forms. Preliminary drawings and models of the modular coil winding forms, to be used until revised versions are provided, are currently

available on the PPPL FTP server. Drawings and models that are released for fabrication will be provided prior the Subcontractor providing a firm fixed price bid and schedule proposal.

2 WORK REQUIREMENTS

The tasks described below should be performed approximately in the order indicated. It is expected that the Subcontractor may be working on several in parallel. Schedule requirements are described in the Subcontract.

2.1 TECHNICAL

2.1.1 Manufacturing Methods for the Three Winding Form Shapes

The Subcontractor shall describe the manufacturing methods for fabricating, inspecting, and machining the modular coil winding forms and proposed Quality Assurance provisions. (Ref. Specification # NCSX-CSPEC-141-01-01, Sects. 3 and 4).

2.1.2 Alloy Selection

Describe in detail the composition and mechanical and physical properties (at 77 K and at room temperature) of the chosen alloy and your experience with using this alloy. (Ref. Specification # NCSX-CSPEC-141-01-01, Sect. 3.2.1)

2.1.3 Manufacturing Evaluation of Candidate Design Features

The NCSX project is considering changing several current design features. These include changing the location of the cooling tubes (from being mounted on the clamps to being embedded at the base of the tee section), changing where the leads are routed through the shell, and adding features for attaching the mold and injecting epoxy during vacuum pressure impregnation (VPI). These features will affect the geometry of the casting and the machining of the winding form. NCSX will describe the candidate design features in conceptual level drawings and design descriptions. The Subcontractor shall assess the manufacturing implications of the candidate design features, including feasibility, recommendations, and approximate cost and schedule impacts based on this information.

2.1.4 Mold Fabrication

Describe details of the proposed mold design and fabrication (including modeling).

2.1.5 Flow Solidification / Distortion Analyses

Describe analyses, plans, and schedules.

2.1.6 Casting details

Describe the details of the proposed casting process.

2.1.7 Post-Casting Processing

2.1.7.1 Non-Destructive Testing

Describe the non-destructive testing methods proposed for evaluating the castings for defects. (Ref. Specification # NCSX-CSPEC-141-01-01, Sects. 4.2.8-4.2.10).

2.1.7.2 Dimensional inspection and verification

Describe measuring instrumentation, proposed details of measurements and how these measurements will be used to verify that the cast part meets the requirements. (Ref. Specification # NCSX-CSPEC-141-01-01, Sect. 4.2.7)

2.1.7.3 Winding Form Repairs

Describe expected defects, proposed repair methods, and impact on winding form material properties. If Hot Isostatic Pressing (HIPing) or another post processing method is proposed, provide detailed rationale for method selection. (Ref. Specification # NCSX-CSPEC-141-01-01, Sect. 3.3.2.2).

2.1.7.4 Heat Treatment

Describe heat treatment(s) and fixtures required for chosen alloy. Describe methods for controlling distortion during heat treatment. (Ref. Specification # NCSX-CSPEC-141-01-01, Sect. 3.3.2.1).

2.1.7.5 Machining and Final Finishing

Describe details of proposed machining methods and any final finishing operations (including any mechanical surface finishing methods and final cleaning methods). (Ref. Specification # NCSX-CSPEC-141-01-01, Sect. 3.2.1.5)

2.1.7.6 Final Inspection

Describe the final inspection methods proposed to assure that the winding forms meet all of the requirements of NCSX-CSPEC-141-01-01.

2.2 SUBCONTRACTOR'S RECOMMENDATIONS

The Subcontractor shall recommend changes to the design or Specification that could make the winding forms easier to manufacture, reduce costs, improve the fabrication schedule, or reduce risk. PPPL reserves the right to accept or reject any or all of the Subcontractor's change recommendations, or to incorporate them into the specification in whole or in part, even in the event that the contract award for production winding forms is to another supplier.

2.3 ADDITIONAL MANUFACTURING DEVELOPMENT ACTIVITIES

The Subcontractor shall perform and document any additional agreed upon manufacturing development activities that are necessary to develop the knowledge required to produce the three winding form shapes and reduce the technical, cost, and schedule risk. (These additional activities are to be defined in the Subcontractor's Proposal and shall be set forth in a revised Statement of Work.)

2.4 PRELIMINARY MANUFACTURING / INSPECTION / TEST (MIT) AND QUALITY ASSURANCE (QA) PLANS FOR PRODUCTION COILS

The Subcontractor shall produce preliminary MIT and QA Plans for all three winding shapes. (See Section 3.4 of this SOW for plan descriptions.)

2.5 BUDGETARY COST AND SCHEDULE ESTIMATE

The Subcontractor shall prepare a Budgetary Cost and Schedule Estimate for all (18) production winding forms and required tooling in the format provided in the subcontract based on the MIT plan developed in Section 2.4.

2.6 PROCESSING PLANS FOR PROTOTYPE

The Subcontractor shall develop MIT and QA Plans (see Section 3.4) for the Prototype Winding Form.

2.7 PROTOTYPE MANUFACTURE

The Subcontractor shall manufacture a full-scale prototype winding form, including any required tooling. Drawings have been provided for a prototype based on the Type A coil. However, the NCSX Project is considering changing the prototype to Type C. A decision will be made after discussions with the Subcontractor.

2.8 FINAL MIT AND QA PLANS FOR PRODUCTION WINDING FORMS

The Subcontractor shall develop final MIT and QA Plans (see Section 3.4) for production of all three winding form shapes based on these supplied documents. 30 days before Final MIT and QA Plans for Production Winding Forms are due, PPPL will provide an approved specification (NCSX-CPEC-141-02-00) and associated Pro/Engineer models and drawings that are released for fabrication. These are expected to be similar to those used in the performance of this SOW, but with updates based on the manufacturing development activities and the production of the Prototype performed under this SOW.

2.9 FIRM FIXED PRICE AND SCHEDULE PROPOSAL

The Subcontractor shall provide a firm fixed price and schedule proposal for the (18) production winding forms in the format provided in the Subcontract based on Section 2.8. 30 days before the Firm Fixed Price and Schedule Proposal for Production Winding Forms are due, PPPL will provide an approved specification (NCSX-CPEC-141-02-XX, where XX reflects the current approved version at that time) and associated Pro/Engineer models and drawings that are released for fabrication. These are expected to be similar to those used in the performance of this SOW, but with updates based on the manufacturing development activities and the production of the Prototype performed under this SOW.

3 QUALITY ASSURANCE

3.1 INSPECTION/ SURVEILLANCE/AUDIT BY PPPL

Authorized representatives of PPPL and the U. S. Government shall have the right at all reasonable times to visit the Subcontractor's premises and those of Subcontractor's suppliers during the performance of the Subcontract for the purposes of inspection, surveillance, audit and/or obtaining any required information as may be necessary to assure that items or services are being furnished in accordance with specified requirements. Such visits shall be coordinated

with the Subcontractor's personnel to minimize interference with the normal operations of said premises. The Subcontractor shall make available records and documentation necessary for this function and shall provide all reasonable facilities and assistance for the safety and convenience of PPPL and/or U. S. Government representatives in the performance of their duties. PPPL and the U. S. Government recognize the Subcontractor's right to withhold information concerning proprietary processes. The Subcontractor agrees to insert the paragraph above in each lower-tier procurement issued hereunder.

3.2 SUBCONTRACTOR'S RESPONSIBILITY FOR CONFORMANCE

Neither PPPL review and/or approval of Subcontractor's documents nor PPPL inspection of Subcontractor's items or services shall relieve the Subcontractor of responsibility for full compliance with requirements of the purchase order/contract. The Subcontractor is responsible for assuring that all requirements and restrictions are imposed on any sub-tier suppliers.

3.3 SUBCONTRACTOR'S QUALITY ASSURANCE PROGRAM

The Subcontractor shall establish and maintain an effective Quality Assurance Program to assure that the Subcontractor's work meets the required quality and is performed in accordance with contractual requirements. Subcontractor's quality assurance function shall be organized to have sufficient authority and independence to identify quality problems, verify conformance of supplied items or services to specified requirements and obtain satisfactory resolution of conflicts involving quality.

3.4 PROCESSING PLANS

The Subcontractor shall prepare Manufacturing/Inspection Test (MIT) and Quality Assurance (QA) Plans for PPPL review and approval.

3.4.1 MIT Plan

Within the MIT plan, the Subcontractor shall identify processes and materials and show their integrated flow into end items. The plan shall also identify critical manufacturing operations and inspections and tests. Procedures and/or protocols for contaminant control and cleanliness shall be included with the MIT. Preparing the Plan may include developing a flow chart and generating Process Sheets/Shop Travelers, etc. PPPL may designate selected manufacturing, inspection and/or test operations as mandatory "witness" points based on the MIT plan. Subcontractor shall provide PPPL with a minimum of five (5) working days notice in advance of

witness points described in the MIT plan. Such witness points shall be mutually planned to minimize delays.

3.4.2 QA Plan

The Quality Assurance Plan shall describe the specific quality assurance and quality control procedures and practices to meet the requirements of this subcontract and associated specification.

3.5 INSPECTION AND TEST PROCEDURES

Inspections and tests shall be performed in accordance with written procedures referencing criteria for acceptance or rejection. Actual data and accept/reject status for each inspection and test shall be documented for each winding form.

3.6 DOCUMENT TRACEABILITY AND RECORDS

The Subcontractor shall maintain a system of documentation whereby objective evidence of required operations, inspections, examinations, and tests is systematically compiled, indexed and stored. Such objective evidence may include "travelers"; and material test, certification, inspection, examination, test and discrepancy reports; which shall be complete, legible, and validated by responsible personnel and shall be traceable to subject items.

3.7 EQUIPMENT/MATERIAL IDENTIFICATION AND STATUS

Material and equipment identification shall be maintained throughout the program and be traceable to the records. Status of acceptability shall be readily discernible through the Subcontractor's use of tags, stamps, serial numbers or other positive means.

3.8 CALIBRATION OF TEST AND MEASURING EQUIPMENT

Inspections and tests shall be performed using properly calibrated measuring and test equipment. Subcontractor shall have in its possession the necessary equipment to perform the required inspections and tests. Calibration standards shall be traceable to the National Institute for Standards and Technology (NIST) or equivalent acceptable to PPPL and shall not be used for shop inspections, but instead be protected against damage or degradation.

3.9 CONTROL OF SPECIAL PROCESSES

Subcontractor shall use trained and qualified personnel and qualified written procedures in accordance with specified requirements for the performance of certain special processes, including but not limited to, soldering, electronic assembly, brazing, welding, plating, heat treatment, nondestructive examination, etc. Copies of special process procedures shall be available for review by Princeton and submitted to Princeton for review and approval if requested.

3.10 RELEASE FOR SHIPMENT FORM

Subcontractor shall have a signed "Product Quality Certification and Shipping Release" Form (Attachment 1 of this SOW) prior to NCSX Project acceptance of procured items or services for full or partial shipment. NCSX Project reserves the right to refuse to accept shipments unless accompanied by a signed "Shipping Release Form".

3.11 PROCESS HISTORY

Subcontractor shall provide to PPPL, with the shipment release request, a Process History, which includes a compilation of documents, detailing the objective evidence of the acceptability of the work performed. The Process History shall include as a minimum, but not be limited to, the following:

3.11.1 Material Certifications

The Subcontractor shall submit Material Test Reports showing actual relevant chemical, mechanical, and electrical properties of materials used and providing traceability to the actual material. Material certifications from sub-tier suppliers shall also be submitted. One copy is to be submitted upon Subcontractor acceptance for use.

3.11.2 Inspection and Test Reports

Copies of the original reports of all required inspections, tests and examinations, which have been properly validated by authorized personnel.

3.11.3 Repair Documentation

Repair documentation specified in NCSX-CSPEC-141-01-01, Section 3.3.2.2 .

3.12 PPPL RECEIVING AND INSPECTION

PPPL will perform Receiving Inspection on items or services supplied by Subcontractor, using either a sampling plan or 100% inspection. Discrepant items or services will be rejected and returned to Subcontractor or reworked by PPPL at the Subcontractor's expense.

4 DELIVERABLES

4.1 WEEKLY REPORTS

Weekly status reports covering technical, administrative, and Quality activities shall be provided to Princeton's Technical and Administrative Representatives by e-mail every Friday during the period of performance.

4.2 EARNED VALUE REPORTING

The Contractor shall prepare and submit monthly e-mail reports indicating earned value achieved. This will be a simplified earned value reporting requirement that will require the following actions by the contractor in preparation for earned value reporting:

- The Contractor will submit a resource-loaded (fully loaded dollars only) schedule that clearly indicates the tasks to be accomplished, the time frame over which each task will be accomplished, and the resources assigned to that task. This schedule will be submitted within three (3) weeks of contract award.
- The Contractor will monthly (e-mail report satisfactory) report costs (accrued and actual) against each task on the resource-loaded schedule. The first report shall be submitted at the end of the first calendar month of the contract award (i.e., if contract awarded in January 2003, the first report will be provided at the end of January 2003).
- The Contractor shall monthly report percent complete on each task (e-mail report satisfactory). PPPL will then use this percent complete to determine the earned value based on the total resources applied to each task.
- On an exception basis, PPPL will request explanation and proposed corrective action plan on those tasks that develop significant unfavorable schedule or cost variances.

4.3 TECHNICAL REPORTS

Provide (3) printed copies and (1) electronic copy in Adobe Acrobat .pdf format of all technical reports by the dates specified in the Subcontract.

4.4 PROTOTYPE PROCESSING PLANS

MIT & QA Plans for the prototype Winding Form (Section 2.6)

4.5 PRELIMINARY PRODUCTION PROCESSING PLANS

Production processing plans as described in Section 2.4.

4.6 PROTOTYPE WINDING FORM

Fabrication of the prototype winding form per Section 2.7. Packaging and shipping details shall be subject to prior PPPL approval.

4.7 PRODUCTION PROCESSING PLANS

MIT & QA Plans and a firm fixed price and schedule proposal for the production winding forms as described in Sections 2.8 and 2.9 of this document.

4.8 DOCUMENTATION

Documentation is described in Section 3.11 of this SOW.

4.9 TOOLING

All tooling specially fabricated for the performance of this SOW shall become the property of the United States Government. Disposition will be per direction of PPPL. In the preparation of a fixed price proposal for the production coils, Subcontractor shall assume that the tooling is not a deliverable.

ATTACHMENT 1.

PRINCETON UNIVERSITY
PLASMA PHYSIC LABORATORY—PPPL

PRODUCT QUALITY CERTIFICATION AND SHIPPING RELEASE					
PROJECT	ITEM DESCRIPTION				SHIPMENT NUMBER
PPPL Subcontract / Order No.		ITEM NO.	SUBCONTRACTOR REFERENCE NO.		QUANTITY SHIPPED

SUBCONTRACTOR'S CERTIFICATION

This is to certify that the products and services identified herein have been produced under a controlled quality assurance program and are in conformance with the procurement requirements including applicable codes, standards and specifications as identified in the above-referenced documents unless noted below. Any supporting documentation will be retained in accordance with the procurement requirements.

SIGNED: _____ DATE: _____

TITLE: _____ COMPANY: _____

PPPL (AUTHORIZED REPRESENTATIVE) SHIPPING RELEASE

This is to certify that evidence supporting the above Subcontractor's Certification statement has been audited and no product/service nonconformances from procurement requirements have been found unless noted below. This product/service is hereby released for shipment.

This section serves as the Quality Assurance release for the above described product for shipment. It does not constitute an acceptance thereof and does not relieve the Vendor, Manufacturer or Contractor of any and all responsibility or obligation imposed by the purchase contract. It does not waive any rights the Purchaser may have under the purchase contract, including the Purchaser's right to reject the above described material upon discovery of any deviations from requirements of the purchase contract, drawings and specifications.

NONCONFORMANCES FROM PROCUREMENT QUALITY REQUIREMENTS:

REMARKS/PRODUCT SERIAL NUMBERS:

BY PPPL QA REPRESENTATIVE (OR DESIGNEE)	DATE