NO.	REVISION	BY	CH	SUP	APPROVED	DATE

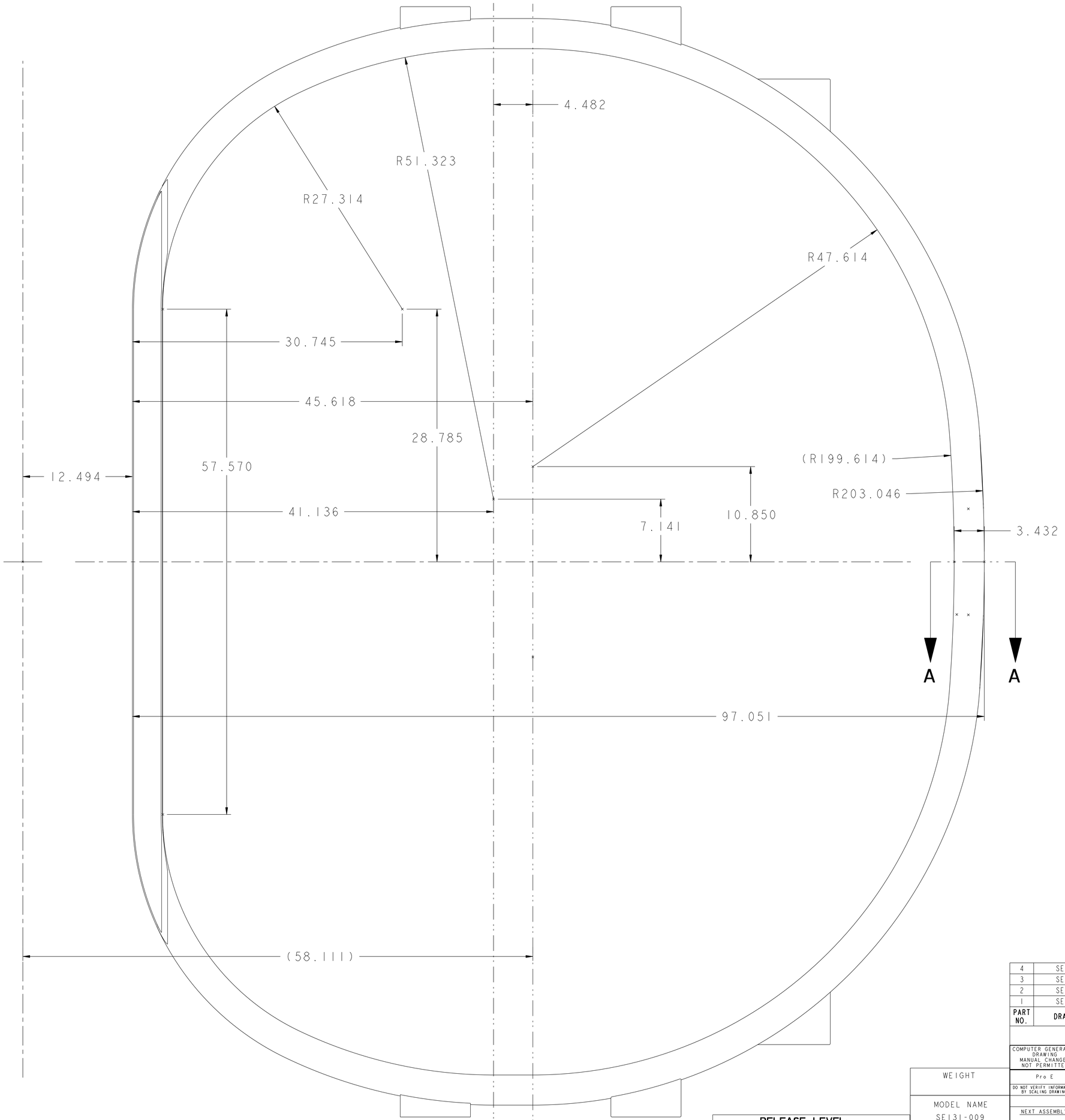

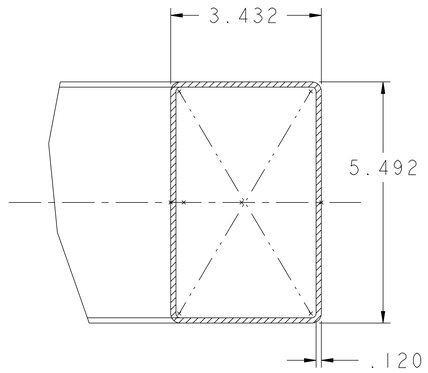

SECTION A-A
SCALE 0.750

DIMENSIONS SHOWN INDICATE FINISHED GROUNDWRAPPED COIL

PART NO.	DRAWING NO	NOMENCLATURE OR DESCRIPTION	MATERIAL	QTY REQD
4	SE131-046	TF COIL NOSE AREA INSULATION	KAPTON/DRY GLASS TAPE	2
3	SE131-044	TF COIL NOSE AREA INSULATING SHEET	KAPTON/DRY GLASS TAPE	2
2	SE131-011	TF COIL TAPER INSULATION SHEET	G-10	1
1	SE131-075	TF COIL ASSEMBLY UNMACHINED TAPER	COPPER/INSULATION	1

PARTS LIST

COMPUTER GENERATED DRAWING MANUAL CHANGES NOT PERMITTED

Pro E

DO NOT VERIFY INFORMATION BY SCALING DRAWING

NEXT ASSEMBLY

CENTRAL FILES:
UNLESS OTHERWISE SPECIFIED

DIMENSIONS ARE IN INCHES
MACHINE SURFACES 125
BREAK SHARP EDGES .005/.020

TOLERANCES NON-CUMULATIVE

DECIMAL-INCH		FRACTIONS
.X	+/-.100	0"-12" +/-1/16
.XX	+/-.030	12"-72" +/-1/8
.XXX	+/-.005	72"-120" +/-1/4
ANGULAR	+/-0°-15'	OVER 120" +/-1/2

WEIGHT

MODEL NAME
SE131-009

WELDING ENGINEER

RELEASE LEVEL:
DWG VERSION NO:

PRINCETON PLASMA PHYSICS LABORATORY
PRINCETON UNIVERSITY
NATIONAL COMPACT STELLARATOR EXPERIMENT

STELLARATOR CORE
CONVENTIONAL COILS
TF COIL GEOMETRY

DSN: J. RUSHINSKI
CHK:
ENGR: M. KALISH
SUPV:

DRAWING NO:
SE131-009
SHEET 1 OF 3
REV

NCSX_ASSY_FORMAT_E

NCSX-SE131-009