NEXT ASS'Y:

FINAL ASS'Y:

NOTES

1. INTERPRET DRAWING PER MECHANICAL ENGINEERING DRAFTING STANDARD ES-3.1-2.
2. INTERPRET DIMENSIONS AND TOLERANCES PER ANSI Y14.5M.
3. DIMENSIONS ARE IN IN OR MM.

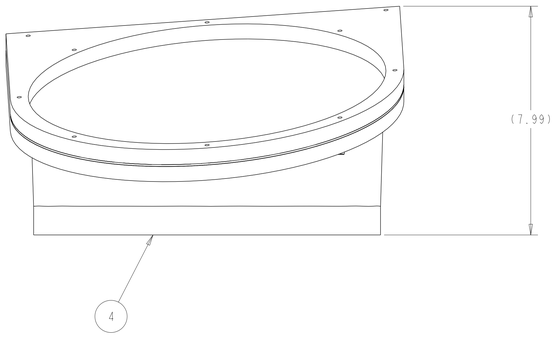

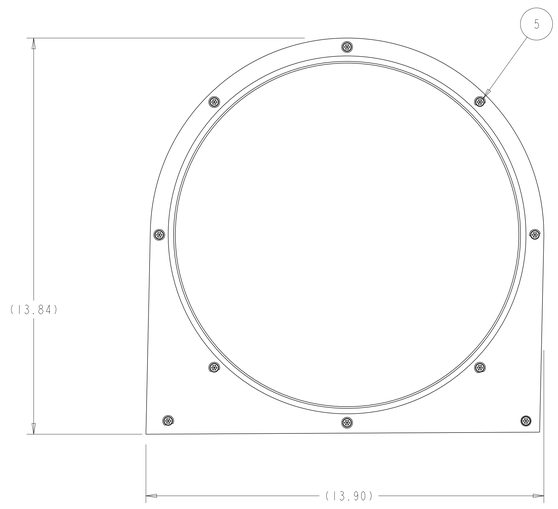

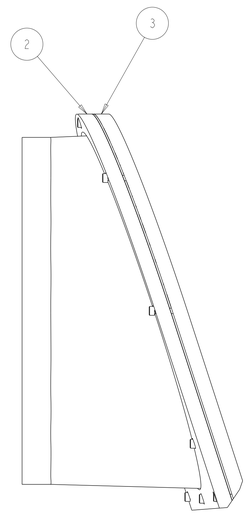

1 SCALE 0.500

next assy	-1	CAGE CODE	PART OR IDENTIFYING NO	NOMENCLATURE OR DESCRIPTION	MATERIAL	SPECIFICATION	FIND NO
	10		-5	SHCS-10-24_X_1			5
	1		SE122-367-1	PORT 10 WINDING FORM SEAL BOOT			4
	1		SE122-366-1	PORT 10 WINDING FORM SEAL INNER PLATE			3
	1		SE122-365-1	PORT 10 WINDING FORM SEAL OUTER PLATE			2
AR	X		-1	PORT 10 WINDING FORM SEAL ASSEMBLY			1

NEXT ASSEMBLY — PARTS LIST

SE122-364

NO REPRESENTATION OR WARRANTY, EXPRESSED OR IMPLIED, IS MADE AS TO THE ACCURACY, COMPLETENESS OR USEFULNESS OF THE INFORMATION OR STATEMENTS CONTAINED IN THESE DRAWINGS, OR THAT THE USE OR DISCLOSURE OF ANY INFORMATION, APPARATUS, METHOD OR PROCESS DISCLOSED IN THESE DRAWINGS MAY NOT INFRINGE PRIVATE RIGHTS OF OTHERS. NO LIABILITY IS ASSUMED WITH RESPECT TO THE USE OF, OR FOR DAMAGES RESULTING FROM THE USE OF, ANY INFORMATION, APPARATUS, METHOD OR PROCESS DISCLOSED IN THESE DRAWINGS. DRAWINGS MADE AVAILABLE FOR INFORMATION TO BIDDER ARE NOT TO BE USED FOR OTHER PURPOSES, AND ARE TO BE RETURNED UPON REQUEST OF THE FORWARDING CONTRACTOR.

P THIS DRAWING PRODUCED ON PRO-ENGINEER

REV	DESCRIPTION (REVISION OR ISSUE PURPOSE)	BY	DATE	CHK	DEPT	DATE	PE	REQ	DATE	ORNL	DOE	DATE
0	ORIGINAL ISSUE											

SCALE NOTED

TOLERANCES UNLESS OTHERWISE SPECIFIED

FRACTIONS :
XX DECIMALS ±.01
XXX DECIMALS ±.005
ANGLES ±0°15'
BREAK SHARP EDGES .06 MAX
FINISH 125 UNLESS OTHERWISE SPECIFIED

DRAWING APPROVALS		DATE
DES	P.L.GORANSON	08/05
DRW	R.A.HURD	08/05
CHK	:	:
SECT	:	:
DEPT	:	:
PE	:	:
CR	:	:
PJ	:	:
REQ	:	:
PPPL DRFT		:

UT-BATTELLE

Oak Ridge National Laboratory
managed for the DEPARTMENT OF ENERGY under
U.S. GOVERNMENT contract DE-AC05-00OR22725
UT-BATTELLE, LLC. Oak Ridge, Tennessee

PROJECT NAME: NATIONAL COMPACT STELLARATOR EXPERIMENT

PORT 10 WINDING FORM SEAL ASSEMBLY

VERSION NO.	PLANT	BLDG	FL	SHT	OF	TYPE	CLASS
proi_version	ORNL	BLDG	FLOOR	1	1	A	U

RELEASE LEVEL: proi_release

SE122-364

REV 0