NOTES

1. DRAWING PREPARED IN ACCORDANCE WITH ASME Y14.100-2004.
2. INTERPRET DIMENSIONS AND TOLERANCES PER ASME Y14.5M-1994.
3. DIMENSIONS ARE IN INCHES
4. MAGNETIC PERMEABILITY NOT TO EXCEED 1.02 AS TESTED BY A SEVERN INDICATOR. AVAILABLE FROM:
   SEVERN ENGINEERING
   AUBURN, ALABAMA 36830
   WWW.SEVERNENGINEERING.COM
5. SOLUTION ANNEALED AFTER COMPLETING ALL CUTTING AND GRINDING.

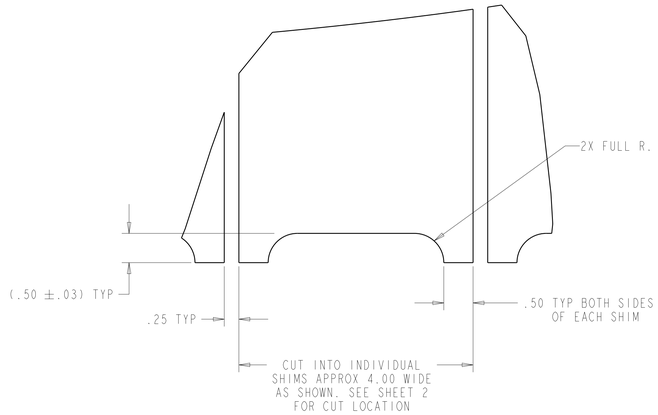

DETAIL A
SCALE 1.00

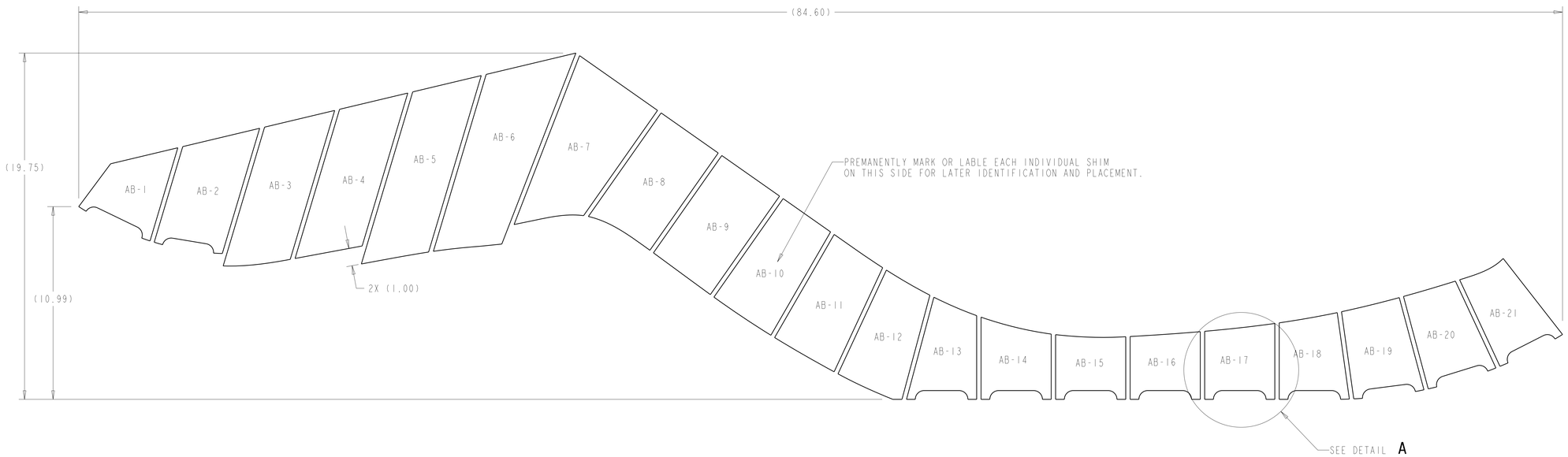

NOTE: PART TO BE CUT FROM FULL SIZE TEMPLATE, SEE SHEET 2.

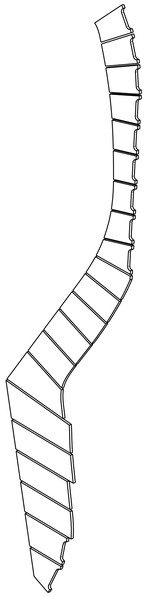

ISOMETRIC VIEW
SCALE 0.125

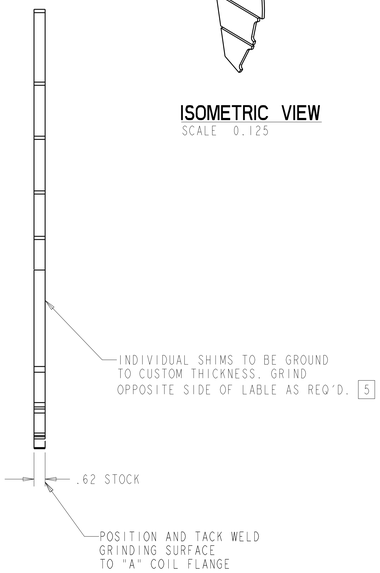

1 AB INBOARD SHIM
SCALE 0.50

AR		-1	AB INBOARD SHIM	316 SST 5	ASTM A240	1
SE140-003	CAGE CODE	PART OR IDENTIFYING NO	NOMENCLATURE OR DESCRIPTION	MATERIAL	SPECIFICATION	FIND NO
	NEXT ASSEMBLY		PARTS LIST			

SE140-052

REV	DESCRIPTION	BY	DATE	CHK	DEPT	DATE	PE	REQ	DATE	ORNL	DOE	DATE
0	ORIGINAL ISSUE	GM	08/07	MC		08/07						

REVISION OR ISSUE PURPOSE — REVISION APPROVAL

SCALE NOTED
TOLERANCES UNLESS OTHERWISE SPECIFIED
FRACTIONS ±
XX DECIMALS ±.01
XXX DECIMALS ±.005
ANGLES ±0°15'
BREAK SHARP EDGES .06 MAX
FINISH .125 UNLESS OTHERWISE SPECIFIED

DES	D WILLIAMSON	08/2007
DRW	G MCGINNIS	08/2007
CHK	M COLE	08/2007
SECT	:	:
DEPT	:	:
PE	:	:
CR	:	:
PJ	:	:
REQ	:	:
PPPL DRFT	J SIEGEL	08/2007
	:	:
	:	:

DRAWING APPROVALS — DATE

UT-BATTELLE
Oak Ridge National Laboratory
managed for the DEPARTMENT OF ENERGY under U.S. GOVERNMENT contract DE-AC05-00OR22725
UT-BATTELLE, LLC. Oak Ridge, Tennessee

PROJECT NAME
NATIONAL COMPACT STELLARATOR EXPERIMENT

A-B INBOARD SHIM

VERSION NO.	PLANT	BLDG	FL	SHT OF	TYPE	CLASS
6+	ORNL	5700	3	1 2	S	U

RELEASE LEVEL: WIP — SE140-052 — REV 0

NO REPRESENTATION OR WARRANTY, EXPRESSED OR IMPLIED, IS MADE AS TO THE ACCURACY, COMPLETENESS OR USEFULNESS OF THE INFORMATION OR STATEMENTS CONTAINED IN THESE DRAWINGS, OR THAT THE USE OR DISCLOSURE OF ANY INFORMATION, APPARATUS, METHOD OR PROCESS DISCLOSED IN THESE DRAWINGS MAY NOT INFRINGE PRIVATE RIGHTS OF OTHERS. NO LIABILITY IS ASSUMED WITH RESPECT TO THE USE OF, OR FOR DAMAGES RESULTING FROM THE USE OF, ANY INFORMATION, APPARATUS, METHOD OR PROCESS DISCLOSED IN THESE DRAWINGS. DRAWINGS MADE AVAILABLE FOR INFORMATION TO BIDDER ARE NOT TO BE USED FOR OTHER PURPOSES, AND ARE TO BE RETURNED UPON REQUEST OF THE FORWARDING CONTRACTOR.

P THIS DRAWING PRODUCED ON PRO-ENGINEER

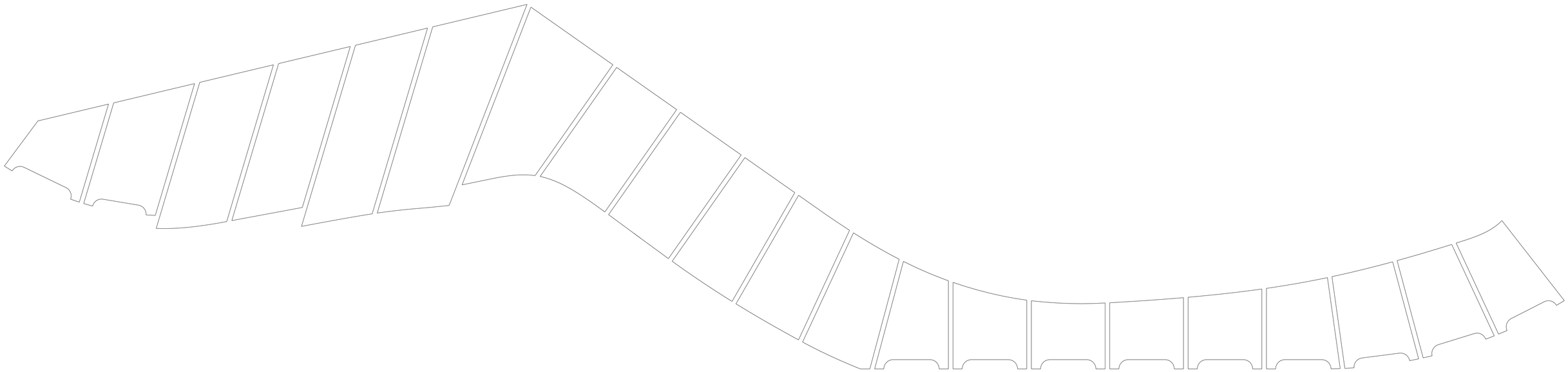

FULL SIZE TEMPLATE - SHOWN WITH INDIVIDUAL SHIM CUT LINES
SCALE 1 : 1

FULL SIZE TEMPLATE - CHECK REF DIMS SHOWN FOR PROPER SCALE
SCALE 1 : 1