NOTES:

1. INTERPRET DIMENSIONS AND TOLERANCES PER ANSI Y14.5M
2. DIMENSIONS ARE IN INCHES
3. DIMENSIONS APPLY AT ROOM TEMPERATURE. OPERATING TEMP 80 K
4. SEE SPECIFICATION, NCSX-CSPEC 141-01-01, FOR ADDITIONAL REQUIREMENTS.
5. GEOMETRY IS DEFINED IN PRO ENGINEER CAD MODELS/FILES SE141-115V.PRT,
6. DRAWING AND MODELS COMBINED DEFINE FINISHED MACHINED PART.

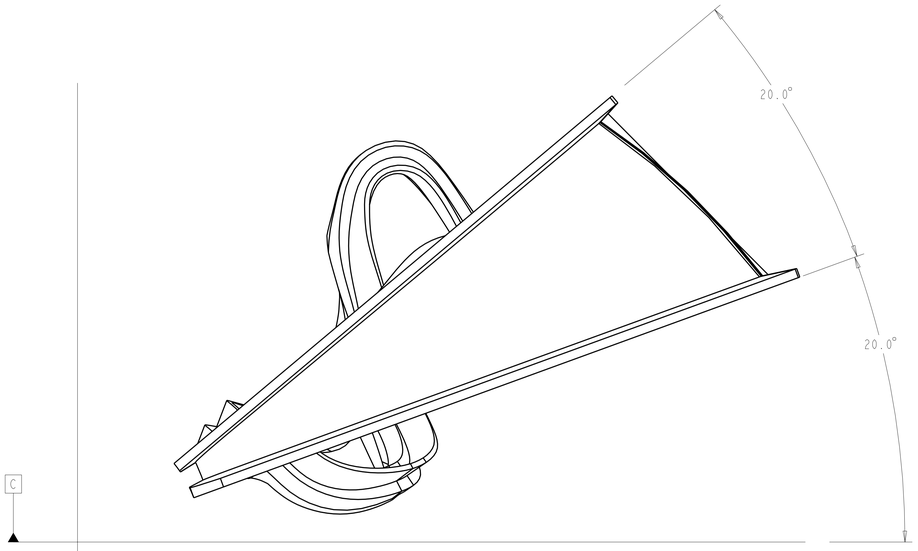

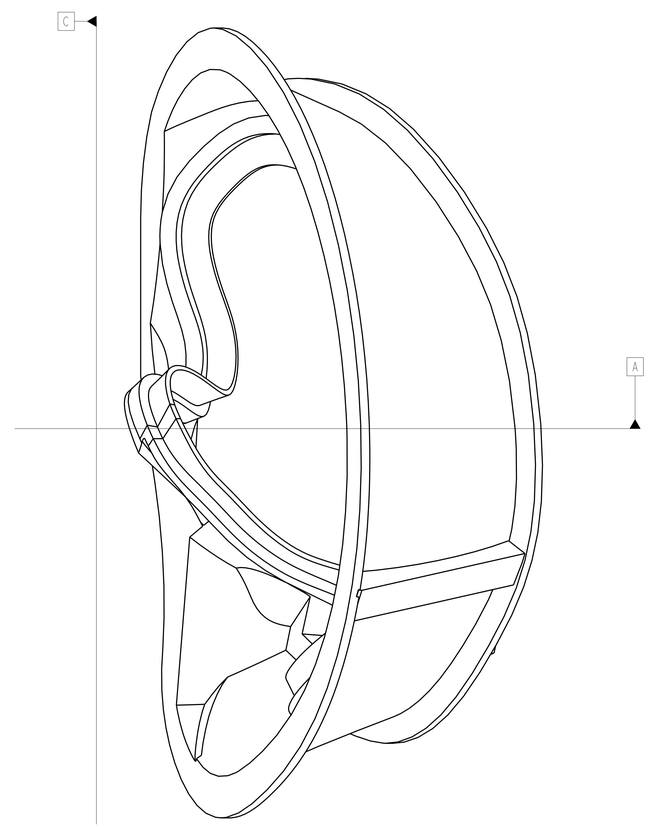

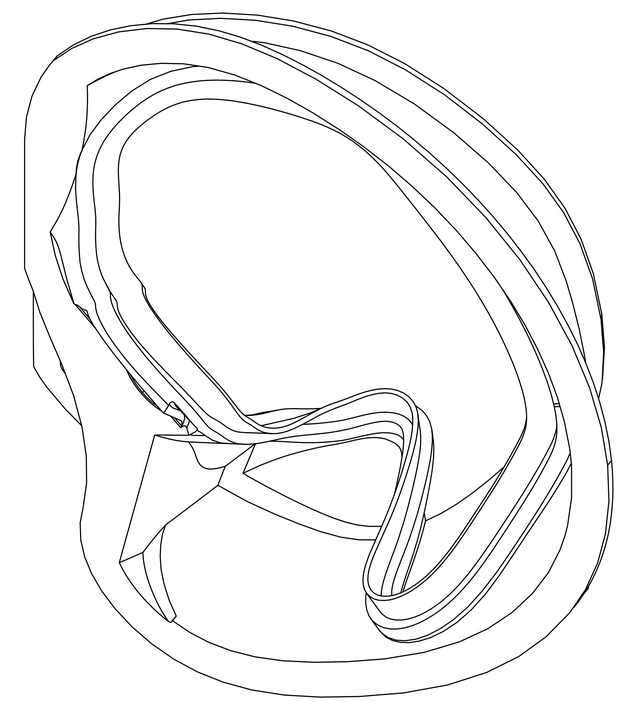

ISOMETRIC VIEW

next assy	CAGE CODE	PART OR IDENTIFYING NO	NOMENCLATURE OR DESCRIPTION	MATERIAL	SPECIFICATION	FIND NO
		SE141-115V	PROTOTYPE TYPE "B" WINDING FORM	SEE NOTE 4	SEE NOTES	1
SE140-103	NEXT ASSEMBLY		PARTS LIST			

APPROXIMATE WEIGHT = 5150 LBS

-1

SCALE: .125

NO REPRESENTATION OR WARRANTY, EXPRESSED OR IMPLIED, IS MADE AS TO THE ACCURACY, COMPLETENESS OR USEFULNESS OF THE INFORMATION OR STATEMENTS CONTAINED IN THESE DRAWINGS, OR THAT THE USE OR DISCLOSURE OF ANY INFORMATION, APPARATUS, METHOD OR PROCESS DISCLOSED IN THESE DRAWINGS MAY NOT INFRINGE PRIVATE RIGHTS OF OTHERS. NO LIABILITY IS ASSUMED WITH RESPECT TO THE USE OF, OR FOR DAMAGES RESULTING FROM THE USE OF, ANY INFORMATION, APPARATUS, METHOD OR PROCESS DISCLOSED IN THESE DRAWINGS. DRAWINGS MADE AVAILABLE FOR INFORMATION TO BIDDER ARE NOT TO BE USED FOR OTHER PURPOSES, AND ARE TO BE RETURNED UPON REQUEST OF THE FORWARDING CONTRACTOR.

P THIS DRAWING PRODUCED ON PRO-ENGINEER

REV	DESCRIPTION	BY	DATE	CHK	DEPT	DATE	PE	REQ	DATE	ORNL	DOE	DATE
	REVISION OR ISSUE PURPOSE	REVISION APPROVAL										

SCALE NOTED

TOLERANCES UNLESS OTHERWISE SPECIFIED
FRACTIONS ±
XX DECIMALS ±.01
XXX DECIMALS ±.005
ANGLES ±0°15'
BREAK SHARP EDGES .06 MAX
FINISH .125 UNLESS OTHERWISE SPECIFIED

DRAWING APPROVALS		DATE
DES	T.BROWN	
DRW	GARY LOVETT	2-14-04
CHK	D. WILLIAMSON	
SECT		
DEPT		
PE		
CR		
PJ		
REQ		
PPPL QRFT		

UT-BATTELLE

Oak Ridge National Laboratory
managed for the DEPARTMENT OF ENERGY under
U.S. GOVERNMENT contract DE-AC05-00OR22725
UT-BATTELLE, LLC. Oak Ridge, Tennessee

PROJECT NAME
NATIONAL COMPACT STELLARATOR EXPERIMENT

PROTOTYPE
TYPE "B" WINDING FORM

VERSION NO.	PLANT	BLDG	FL	SHT	OF	TYPE	CLASS
###	X-10	5700	X	1	1	S	U

RELEASE LEVEL		REV
###	SE141-115V	-

SE141-115V