NEXT ASS'Y: FINAL ASS'Y:

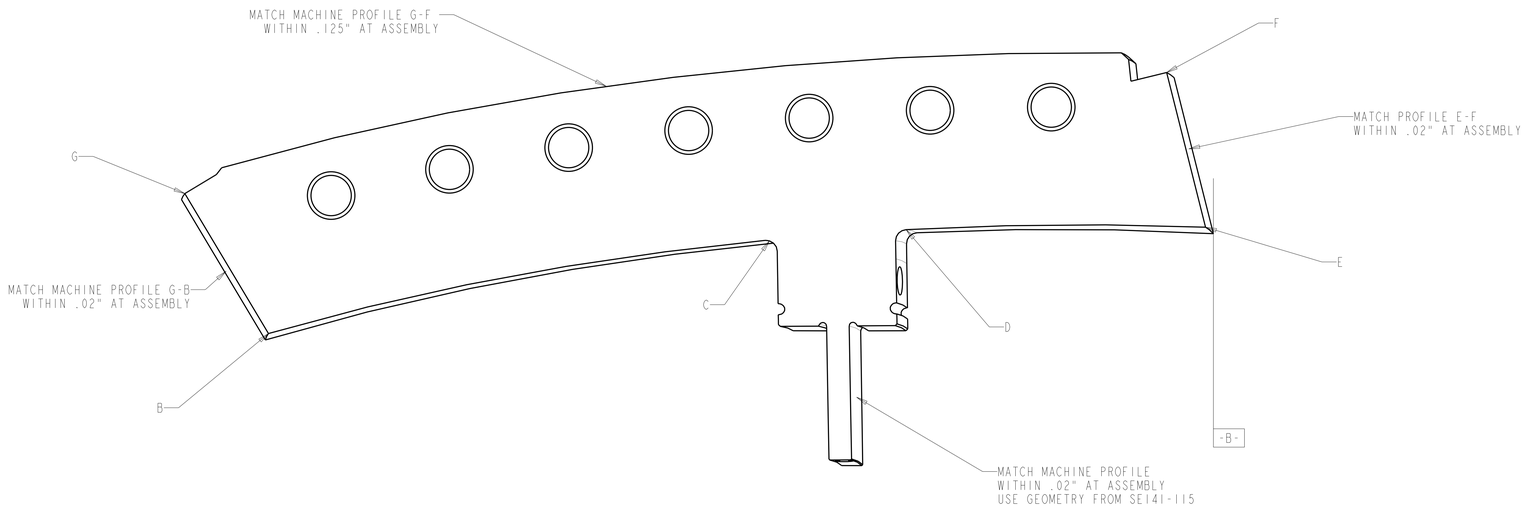

NOTES:

1. INTERPRET DIMENSIONS AND TOLERANCES PER ANSI Y14.5M
2. DIMENSIONS ARE IN INCHES
3. DIMENSIONS APPLY AT ROOM TEMPERATURE. OPERATING TEMP 80 K
4. DRAWING DEPICTS FINAL MACHINED STATE OF ASSEMBLY DEFINED BY PRO-ENGINEER MODEL
5. APPROXIMATE MASS=120 LBS
6. SEE SPECIFICATIONS, NCSX-CSPEC-141-03-00, FOR ADDITIONAL REQUIREMENTS
7. BOND INSULATING SLEEVE (F/N 5) INTO WINDING FORM (F/N 2) USING LOCTITE 411 PER MANUFACTURES INSTRUCTIONS.
8. SHIM MATERIAL FROM SAME CASTING AS PART SE141-115. MARK FOR IDENTIFICATION.

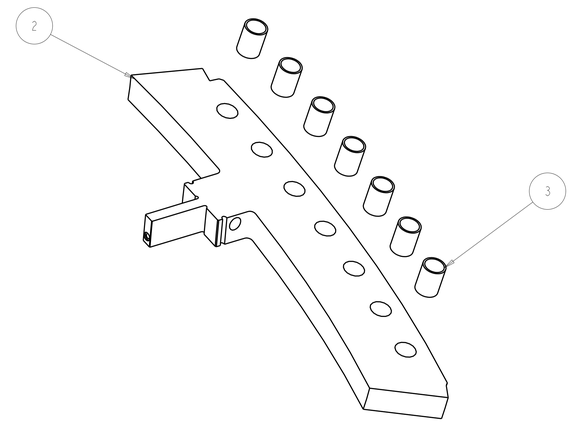

SCALE 0.250

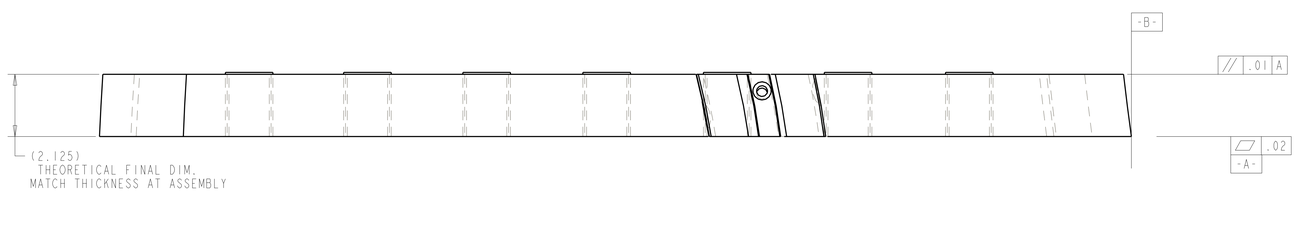

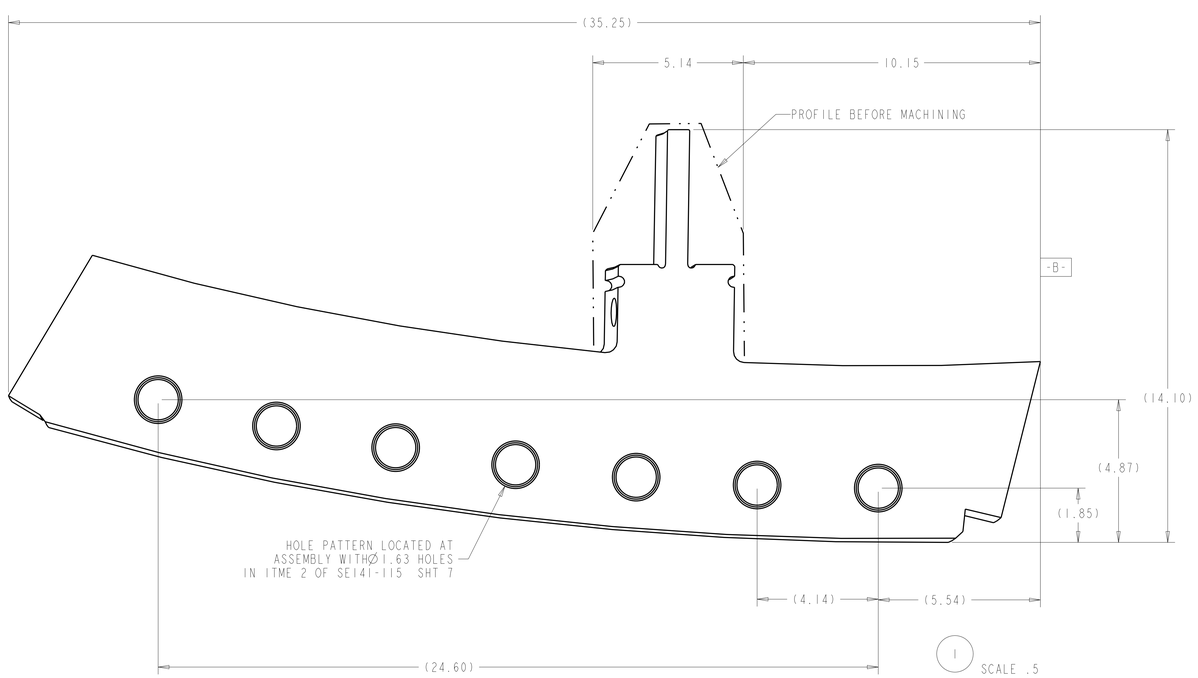

1 SCALE .5

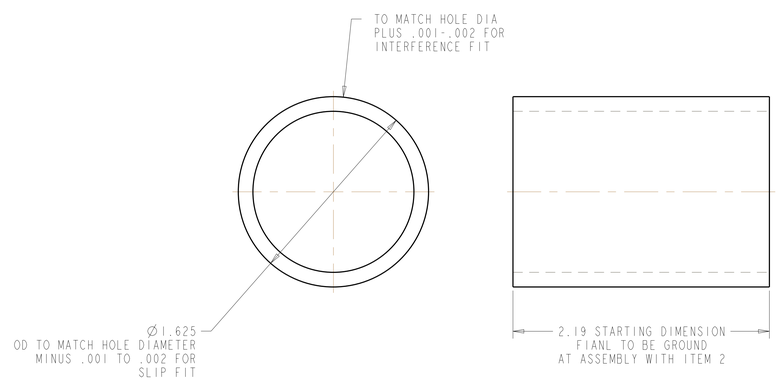

3 SCALE 2.000

next assy		CAGE CODE	PART OR IDENTIFYING NO	NOMENCLATURE OR DESCRIPTION	MATERIAL	SPECIFICATION	FIND NO
	7		-3	INSULATING SLEEVE	G11CR	--	3
	1		-2	TYPE B SHIM	CAST SS		2
	1		-1	SHIM BUSHING ASSEMBLY			1
	-1	NEXT ASSEMBLY		PARTS LIST			

FOR INFORMATIONAL PURPOSES ONLY
NOT FOR FABRICATION

NO REPRESENTATION OR WARRANTY,EXPRESSED OR IMPLIED,IS MADE AS TO THE ACCURACY, COMPLETENESS OR USEFULNESS OF THE INFORMATION OR STATEMENTS CONTAINED IN THESE DRAWINGS, OR THAT THE USE OR DISCLOSURE OF ANY INFORMATION, APPARATUS, METHOD OR PROCESS DISCLOSED IN THESE DRAWINGS MAY NOT INFRINGE PRIVATE RIGHTS OF OTHERS. NO LIABILITY IS ASSUMED WITH RESPECT TO THE USE OF, OR FOR DAMAGES RESULTING FROM THE USE OF, ANY INFORMATION, APPARATUS, METHOD OR PROCESS DISCLOSED IN THESE DRAWINGS. DRAWINGS MADE AVAILABLE FOR INFORMATION TO BIDDER ARE NOT TO BE USED FOR OTHER PURPOSES, AND ARE TO BE RETURNED UPON REQUEST OF THE FORWARDING CONTRACTOR.

P THIS DRAWING PRODUCED ON PRO-ENGINEER

REV | ORNL | QA

SCALE NOTED

TOLERANCES UNLESS OTHERWISE SPECIFIED
FRACTIONS
XX DECIMALS ±.01
XXX DECIMALS ±.005
ANGLES ±0°15'
BREAK SHARP EDGES .06 MAX
FINISH 125 UNLESS OTHERWISE SPECIFIED

DES	T BROWN	6/24/04
DRW	MT BROWN	6/24/04
CHK	M COLE	:
SECT	:	:
DEPT	:	:
PE	D WILLIAMSON	:
CR	:	:
PJ	:	:
REO	:	:
PPPL DRFT	J SIEGEL	:

UT-BATTELLE

Oak Ridge National Laboratory
managed for the DEPARTMENT OF ENERGY under
U.S. GOVERNMENT contract DE-AC05-000R22725
UT-BATTELLE, LLC. Oak Ridge, Tennessee

PROJECT NAME: NATIONAL COMPACT STELLERATOR EXPERIMENT

SHIM BUSHING ASSEMBLY

VERSION NO.	PLANT	BLDG	FL	SHT	OF	TYPE	CLASS
***	X-10	5700	3	1	1	A	U

RELEASE LEVEL: WIP

SE141-058 REV -

SE141-058