NEXT ASS'Y: FINAL ASS'Y:

NOTES:

1. INTERPRET DIMENSIONS AND TOLERANCES PER ANSI Y14.5M
2. DIMENSIONS ARE IN INCHES
3. FABRICATION, INSPECTION, AND TESTING SHALL BE PERFORMED IN ACCORDANCE WITH SPECIFICATION NCSX-CSPEC-121-02 AND STATEMENT OF WORK NCSX-SOW-121-03.

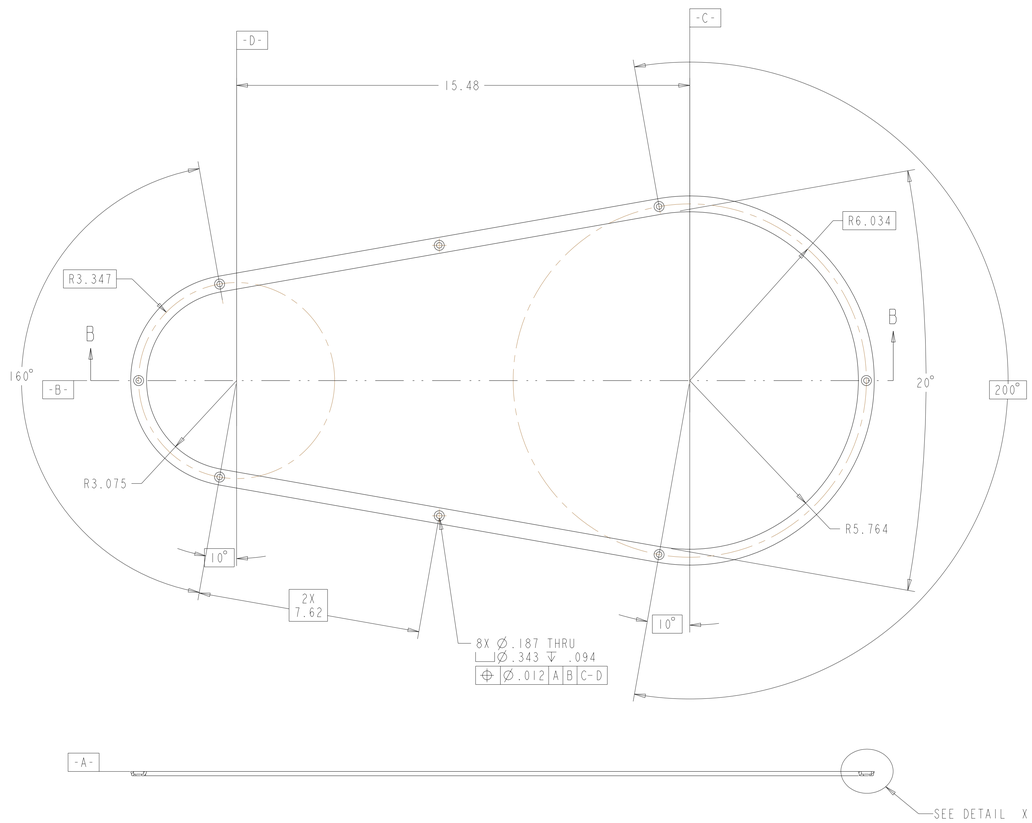

SECTION B-B

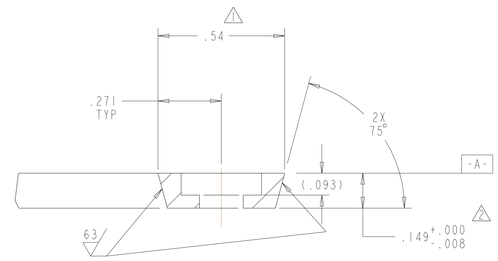

DETAIL X
SCALE 4.00

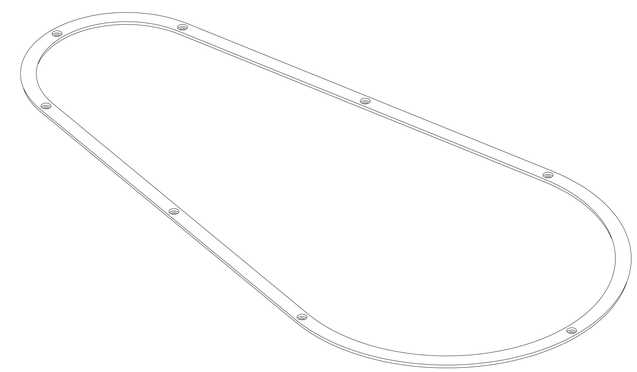

ISOMETRIC VIEW

RELEASED FOR FABRICATION / INSTALLATION

PPPL Drafting: Jerry Siegel 2004.11.24 11:22:45 -05'00'

1 SCALE: 0.50

	AR		-1	PORT 12 SEAL RETAINER DETAIL	SS 316L		1
next assy SE120-004	CAGE CODE		PART OR IDENTIFYING NO	NOMENCLATURE OR DESCRIPTION	MATERIAL	SPECIFICATION	FIND NO
		NEXT ASSEMBLY		PARTS LIST			

SE122-019

REV	DESCRIPTION	BY	DATE	CHK	DEPT	DATE	PE	REQ	DATE	ORNL	DOE	DATE
	REVISED PER ECN-4933	MJC	11/02/04	PLG								
△	TOLERANCE WAS +.000 -.003											
1 △	DIMENSION WAS .541											

REVISION OR ISSUE PURPOSE — REVISION APPROVAL

SCALE NOTED

TOLERANCES UNLESS OTHERWISE SPECIFIED
FRACTIONS :
XX DECIMALS ±.01
XXX DECIMALS ±.005
ANGLES ±0°15'
BREAK SHARP EDGES .06 MAX
FINISH 125 UNLESS OTHERWISE SPECIFIED

DES	P. GORANSON	5-27-04
DRW	G LOVETT	5-27-04
CHK	MT BROWN	6-01-04
SECT	:	:
DEPT	:	:
PE	:	:
CR	:	:
PJ	:	:
REQ	:	:
PPPL DRFT	J. SIEGEL	6/04
	:	:
	:	:

DRAWING APPROVALS — DATE

UT-BATTELLE
Oak Ridge National Laboratory
managed for the DEPARTMENT OF ENERGY under U.S. GOVERNMENT contract DE-AC05-000R22725
UT-BATTELLE, LLC. Oak Ridge, Tennessee

PROJECT NAME: NATIONAL COMPACT STELLARATOR EXPERIMENT

VACUUM VESSEL
PORT 12 SEAL RETAINER
DETAIL

VERSION NO.	PLANT	BLDG	FL	SHT	OF	TYPE	CLASS
0	X-10	5700	3	1	1	S	U

RELEASE LEVEL: Fabrication — SE122-019 — REV 1

NO REPRESENTATION OR WARRANTY, EXPRESSED OR IMPLIED, IS MADE AS TO THE ACCURACY, COMPLETENESS OR USEFULNESS OF THE INFORMATION OR STATEMENTS CONTAINED IN THESE DRAWINGS, OR THAT THE USE OR DISCLOSURE OF ANY INFORMATION, APPARATUS, METHOD OR PROCESS DISCLOSED IN THESE DRAWINGS MAY NOT INFRINGE PRIVATE RIGHTS OF OTHERS. NO LIABILITY IS ASSUMED WITH RESPECT TO THE USE OF, OR FOR DAMAGES RESULTING FROM THE USE OF, ANY INFORMATION, APPARATUS, METHOD OR PROCESS DISCLOSED IN THESE DRAWINGS. DRAWINGS MADE AVAILABLE FOR INFORMATION TO BIDDER ARE NOT TO BE USED FOR OTHER PURPOSES, AND ARE TO BE RETURNED UPON REQUEST OF THE FORWARDING CONTRACTOR.

P THIS DRAWING PRODUCED ON PRO-ENGINEER