NOTES

1. INTERPRET DRAWING PER MECHANICAL ENGINEERING DRAFTING STANDARD ES-3.1-2.
2. INTERPRET DIMENSIONS AND TOLERANCES PER ANSI Y14.5M.
3. DIMENSIONS ARE INCHES

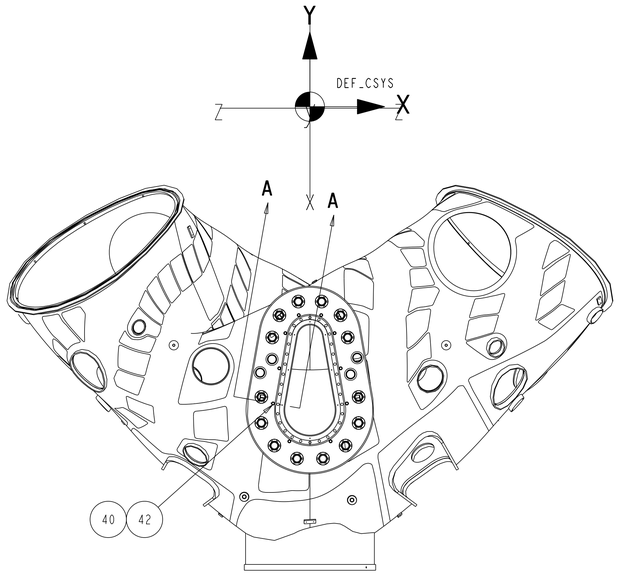

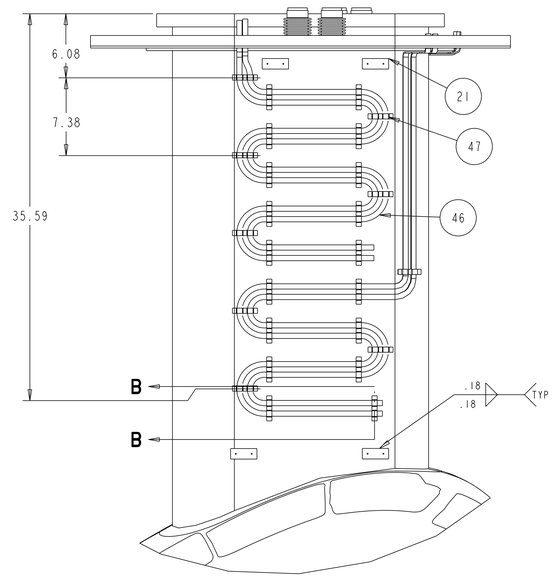

SCALE 0.18

AFTER TAPPING HOLES IN F/N 27 THROUGHLY CLEAN MATING SURFACES AND ADD 1/8" DIA BEAD OF HT FLEXSEAL 350 (F/N 48) ALL AROUND MATING SURFACES AND ASSEMBLE ACCORDING TO MANUFACTURES CURING RECOMMENDATIONS. SEAL ALL AROUND SEAMS AND BOLT HEADS WITH HT FLEXSEAL 350.

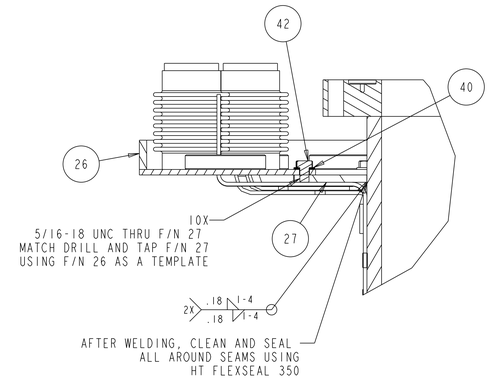

SECTION A-A
SCALE 0.50

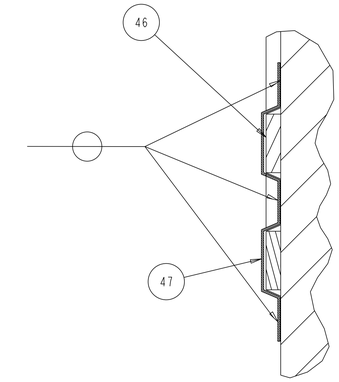

SECTION B-B
SCALE 2.00

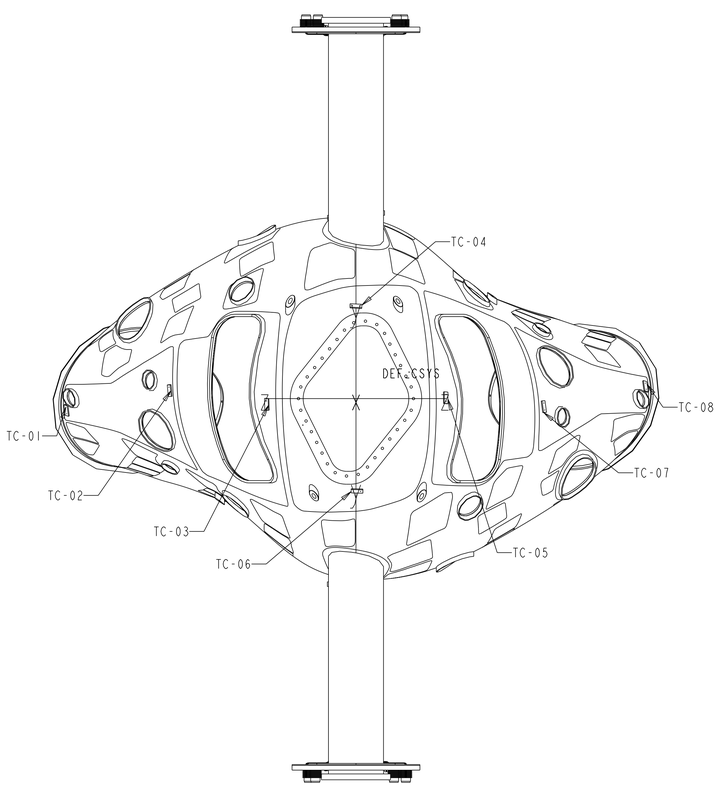

SCALE 0.08

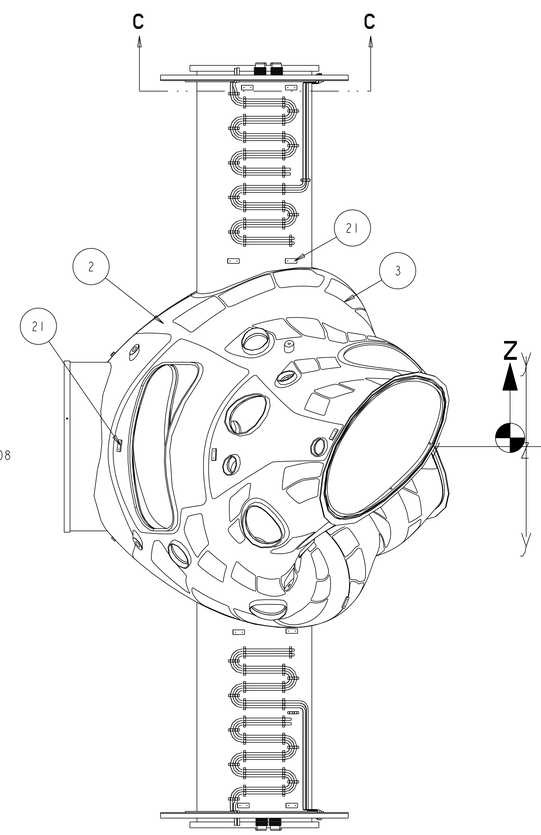

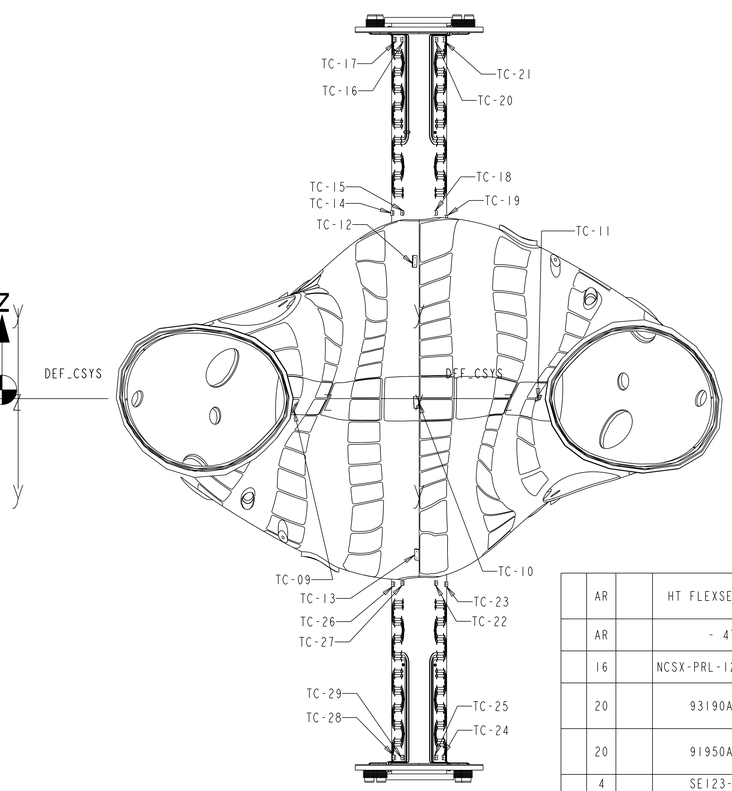

COORDINATES OF THERMOCOUPLE BLOCKS - POINT INDICATES CENTER OF BLOCK ON SURFACE OF VACUUM VESSEL
POINT LOCATIONS ARE APPROXIMATE
ADJUSTMENTS MAY BE REQUIRED TO ACCOMODATE THE FLUX LOOPS

	Hole Chart	top_4	
Point Name	X	Y	Z
ORIGIN	0.000	0.000	0.000
TC-01	-61.692	-41.108	-2.463
TC-02	-39.675	-66.958	1.713
TC-03	-19.111	-86.851	-1.240
TC-04	-0.002	-88.319	19.828
TC-05	19.238	-86.922	0.189
TC-06	0.228	-88.011	-19.635
TC-07	40.015	-66.545	-1.729
TC-08	61.710	-41.017	2.543
TC-09	26.728	-27.258	-1.918
TC-10	0.662	-55.351	-0.821
TC-11	-25.340	-26.367	0.137
TC-12	1.031	-37.158	29.299
TC-13	0.394	-38.689	-33.260
TC-14	5.631	-62.522	39.620
TC-15	3.460	-50.212	39.630
TC-16	3.834	-50.146	76.620
TC-17	5.356	-59.524	76.620
TC-18	-3.829	-50.000	39.630
TC-19	-6.245	-62.267	38.630
TC-20	-3.898	-50.506	76.620
TC-21	-5.548	-59.862	76.620
TC-22	-3.476	-50.299	-39.370
TC-23	-5.646	-62.609	-39.620
TC-24	-3.476	-50.299	-76.620
TC-25	-5.125	-59.655	-76.620
TC-26	5.432	-61.394	-39.620
TC-27	3.435	-50.069	-39.370
TC-28	5.258	-60.409	-76.620
TC-29	3.435	-50.069	-76.620

	AR		HT FLEXSEAL 350	HIGH TEMPERATURE RTV SILICONE	FORTAFIX LTD. PETERBOROUGH PE1 5BJ, UNITED KINGDOM WWW.FORTAFIX.COM	48
	AR		- 47	1/2" HEAT TAPE RETENTION FOIL	28 GA. (.015") INCONEL 625 / ASTM B443	47
	16		NCSX-PRL-12-004-00	HEAT TAPE .50" WIDE X .125" THK X 120" LONG		46
	20		93190A578	HEX HEAD SCREW 5/16-18 UNC X .50 LG 316 SST	McMASTER-CARR ATLANTA, GA 30336-2852 (404) 346-7000	42
	20		91950A030	FLAT WASHER .688 OD X .344 ID X .064 THK 316 STAINLESS STL		40
	4		SE123-167	MOUNT FLANGE		27
	2		SE123-164	CRYOSTAT INTERFACE FLG WELDMENT		26
	29		SE123-155	THERMOCOUPLE MOUNTING PLATE		21
	AR		FLUX LOOP DATA	FLUX LOOP GEOMETRY		3
	1		SE120-002	VACUUM VESSEL PERIOD ASSY		2
AR			-1	HEATING COOLING ASM		1
SE121-008	1	CAGE CODE	PART OR IDENTIFYING NO	NOMENCLATURE OR DESCRIPTION	MATERIAL / SPECIFICATION	FIND NO
			NEXT ASSEMBLY	PARTS LIST		

SE121-004

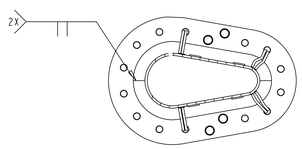

DEF_CSYS

BILL OF MATERIAL REFERENCES
BOM ON DRAWING SE123-049

SECTION C-C

REV	DESCRIPTION	BY	DATE	CHK	DEPT	DATE	PE	REQ	DATE	ORNL	DOE	DATE
	REVISION OR ISSUE PURPOSE	REVISION APPROVAL										

SCALE NOTED

TOLERANCES UNLESS OTHERWISE SPECIFIED
FRACTIONS :
XX DECIMALS ±.01
XXX DECIMALS ±.005
ANGLES ±0°15'
BREAK SHARP EDGES .06 MAX
FINISH .125 UNLESS OTHERWISE SPECIFIED

DES	P GORANSON	09/05
DRW	MT BROWN	09/05
CHK	:	:
SECT	:	:
DEPT	:	:
PE	:	:
CR	:	:
PJ	:	:
REQ	:	:
PPPL DRFT	:	:
	:	:
		:
DRAWING APPROVALS		DATE

UT-BATTELLE
Oak Ridge National Laboratory
managed for the DEPARTMENT OF ENERGY under
U.S. GOVERNMENT contract DE-AC05-00OR22725
UT-BATTELLE, LLC. Oak Ridge, Tennessee

PROJECT NAME
NATIONAL COMPACT STELLARATOR EXPERIMENT

VVSA PHASE I
ASSEMBLY

VERSION NO.	PLANT	BLDG	FL	SHT	OF	TYPE	CLASS
proi_version	ORNL	5700	3	1	1	A	U
RELEASE LEVEL		SE121-004					REV
proi_release							0

NO REPRESENTATION OR WARRANTY,EXPRESSED OR IMPLIED,IS MADE AS TO THE ACCURACY, COMPLETENESS OR USEFULNESS OF THE INFORMATION OR STATEMENTS CONTAINED IN THESE DRAWINGS, OR THAT THE USE OR DISCLOSURE OF ANY INFORMATION, APPARATUS, METHOD OR PROCESS DISCLOSED IN THESE DRAWINGS MAY NOT INFRINGE PRIVATE RIGHTS OF OTHERS. NO LIABILITY IS ASSUMED WITH RESPECT TO THE USE OF, OR FOR DAMAGES RESULTING FROM THE USE OF, ANY INFORMATION, APPARATUS, METHOD OR PROCESS DISCLOSED IN THESE DRAWINGS. DRAWINGS MADE AVAILABLE FOR INFORMATION TO BIDDER ARE NOT TO BE USED FOR OTHER PURPOSES, AND ARE TO BE RETURNED UPON REQUEST OF THE FORWARDING CONTRACTOR.

P THIS DRAWING PRODUCED ON PRO-ENGINEER