NO.	REVISION	BY	CH	SUP	APPROVED	DATE
1	REVISED PER ECN-5309	LM	TB	JS	T. BROWN	11-21-07
2	REVISED PER ECN-	LM	TB	JS	T. BROWN	

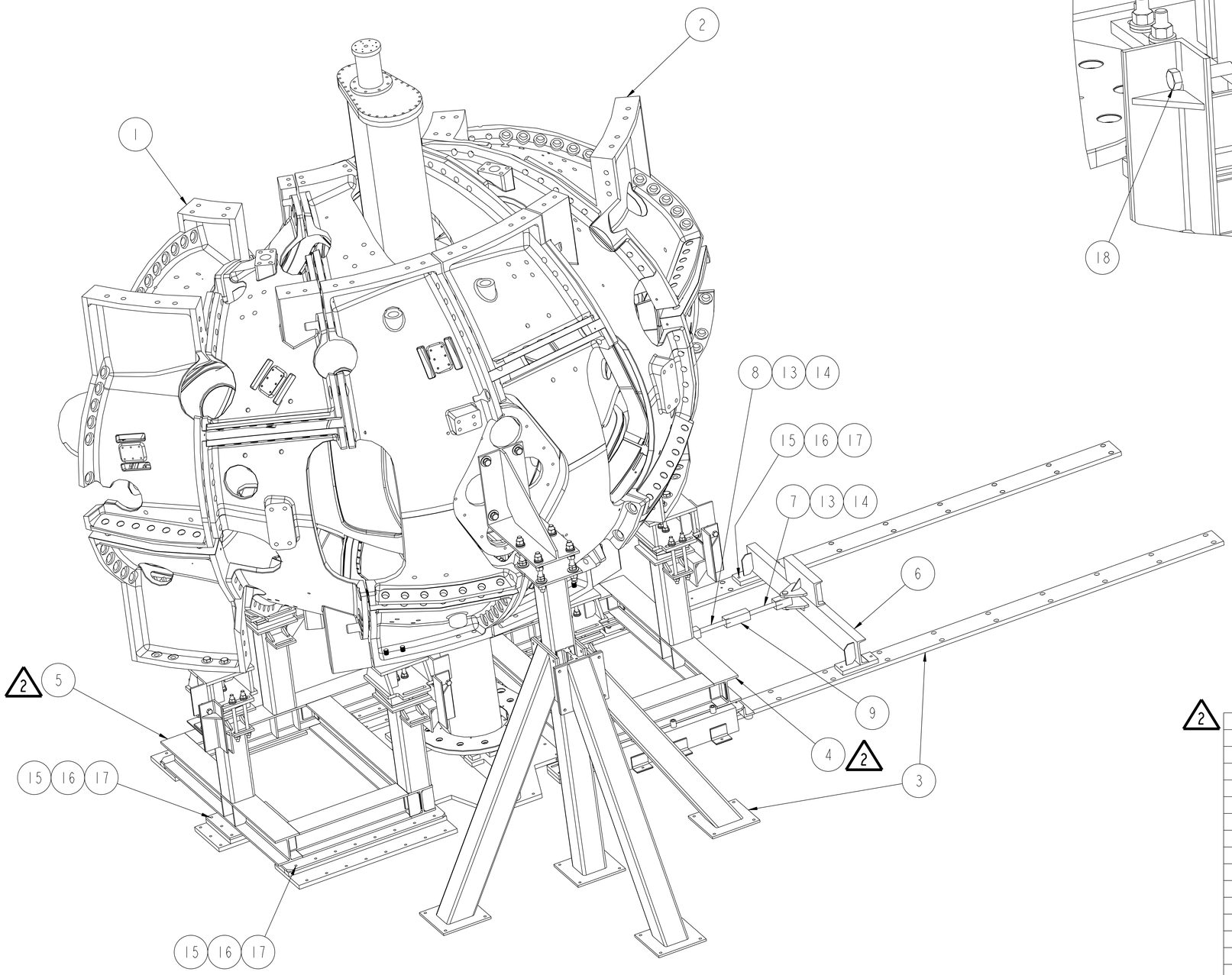

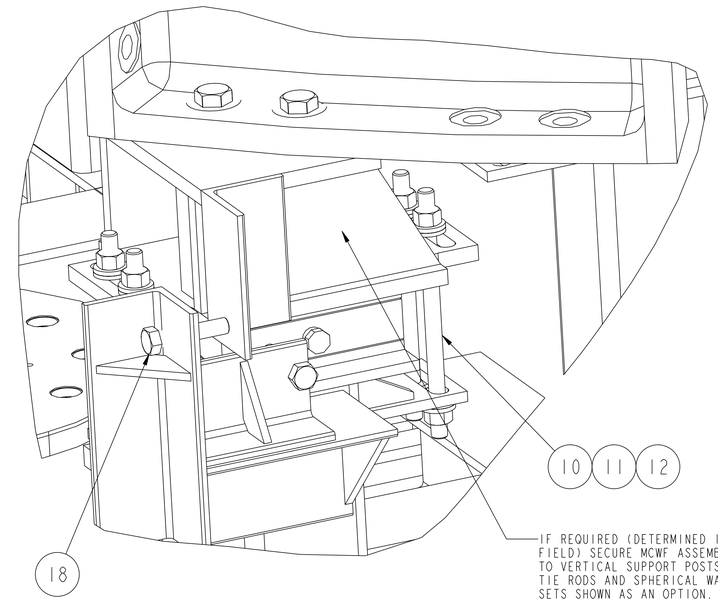

01 ASSY	PART NO.	DRAWING NO.	NOMENCLATURE OR DESCRIPTION	MATERIAL	QTY REQD
12	18	COMM	3/4-10UNC-2A x 3 1/2" LG	C'STL - ZN PLT	
30	17	COMM	1/2 SPLIT LOCK WASHER	C'STL - ZN PLT	
30	16	COMM	1/2 FLAT WASHER	C'STL - ZN PLT	
30	15	COMM	1/2-13UNC-2A x 2" LG HEX HD CAP SCREW	C'STL - ZN PLT	
2	14	COMM	3/16 DIA COTTER PIN	C'STL - ZN PLT	
2	13	COMM	CLEVIS PIN - 1" DIA x 4" LG	C'STL - ZN PLT	
48	12	COMM	3/4-10UNC-2B HEX NUT	C'STL - ZN PLT	
48	11	COMM	3/4 DIA SPHERICAL WASHER SET - McMASTER CARR #91121A090	C'STL - ZN PLT	
24	10	COMM	3/4-10UNC-2A x 12" LG HOLD DOWN TIE ROD	C'STL - ZN PLT	
1	9	SE186-333-8	ADJUSTER BLOCK - R.H. AND L.H. THREAD	SEE DWG	
1	8	SE186-333-03	ADJUSTER BAR - L.H. THREAD	SEE DWG	
1	7	SE186-333-02	ADJUSTER BAR WELDMENT - R.H. THREAD	SEE DWG	
1	6	SE186-333-01	ADJUSTER BAR SUPPORT STRUCTURE WELDMENT	SEE DWG	
1	5	SE186-334-02	MCWF LEFT SIDE SUPPORT CART WELDMENT	SEE DWG	
1	4	SE186-334-01	MCWF RIGHT SIDE SUPPORT CART ASSEMBLY	SEE DWG	
1	3	SE185-303	FLOOR MOUNTED TRACKS W/ V.V. BASE SUPPORT	SEE DWG	
1	2	SE185-302-02	RIGHT HALF PERIOD ASSEMBLY	SEE DWG	
1	1	SE185-302-01	LEFT HALF PERIOD ASSEMBLY	SEE DWG	
	—	THIS DWG	FPA STAGE #3 MCWF OVER V.V.	—	1

PARTS LIST

NCSX-SE186-300

RELEASE LEVEL: WIP
DWG VERSION NO: 1

WEIGHT
44085.3 lbs

MODEL NAME
SE186-300

WELDING ENGINEER

COMPUTER GENERATED DRAWING MANUAL CHANGES NOT PERMITTED

Pro E

DO NOT VERIFY INFORMATION BY SCALING DRAWING

NEXT ASSEMBLY

CENTRAL FILES:
UNLESS OTHERWISE SPECIFIED
DIMENSIONS ARE IN INCHES
MACHINE SURFACES 63
BREAK SHARP EDGES .005/.020
TOLERANCES NON-CUMULATIVE

DECIMAL-INCH		FRACTIONS
.X	+/-.100	0"-12" +/-1/16
.XX	+/-.030	12"-72" +/-1/8
.XXX	+/-.005	72"-120" +/-1/4
ANGULAR	+/-0°-15'	OVER 120" +/-1/2

PRINCETON PLASMA PHYSICS LABORATORY
PRINCETON UNIVERSITY
NATIONAL COMPACT STELLARATOR EXPERIMENT

STELLARATOR CORE
TOOLING DESIGN & FABRICATION
FPA STAGE #3 MCWF OVER VACUUM VESSEL

DSN: L. MORRIS	8-2-2007	DRAWING NO:
CHK: M. COLE	8-2-2007	**SE186-300**
ENGR: T. BROWN	8-2-2007	
SUPV: J. SIEGEL	8-2-2007	SHEET 1 OF 1 REV 1

NCSX_ASSY_FORMAT_E