Activity ID	Activity Description	Forecast Start	Forecast Finish	% cmplt	ETC
Included Closeout Scope					
Brown					
Job: 1803/1805- FPA Tooling/Constr-BROWN					
Station 3-Modular Coil to VVSA Assembly					
1803S3-4	Generate laser screen trace drawings (1/2 period	17JUL08A	06AUG08	25	8,016.30
1803S3-6	Station 3 simulation detail model	02JUN08A	01AUG08	75	5,676.00
1803S3-9	Oversite, cost and schedules, reviews	31JAN08A	30SEP08	LOE	2,649.42
1805S3-207	Misc assembly Cost	31JAN08A	30SEP08		3,763.26
Job: 8203 - Design Integration-BROWN					
8203FY08-4	General integration activities	01FEB08A	30SEP08	LOE	10,521.38
Brooks					
Job: 8204 - Systems Analysis-BROOKS					
8204-FY08Z	Syst Analysis, studies & tech assurance FY08 etc	02JUN08A	30SEP08	LOE	31,624.75
Chrzanowski					
Job: 1352 - PF Coil Procurement-CHRZANOWSKI					
PF Coil Fabrication					
141-038.1	PF Conductor cancellation cost	21FEB08A	18JUL08	C	93,150.00
Job: 1408 - MC Winding Supplies-CHRZANOWSKI					
1408-3	Misc and safety supplies ($7k/mo.)	23MAY07A	31JUL08	LOE	149.04
1408-6	VPI clean manifold contract	23MAY07A	31JUL08	80	2,484.00
1408-8	Cutting hardware for flange bolts	23MAY07A	31JUL08	LOE	273.24
1408-7	Misc tech shop support	23MAY07A	31JUL08	80	10,108.16
Job: 1451 - Mod Coil Winding-CHRZANOWSKI					
Station 3-Casting Prep & Winding					
P1-170	Instl Chill Plates,Tubing,Bag A6	02JUN08A	11JUL08		43,117.62
Station 5-VPI					
P1-171V	VPI (Station 5) A6	14JUL08A	22JUL08		47,514.31
P3-171VM	COMPLETE VPI OF 18th MOD COIL		22JUL08		0.00
Station 1 Post VPI					
P2-171C	Final Clamps & Warm Test (Station1) B6	02JUN08A	23JUL08	5	22,806.54
P1-171C	Final Clamps & Warm Test (Station1) A6	24JUL08	14AUG08		24,006.88
LOE Oversight & Supervision					
145XSPRV-3	Winding Engineering oversight and supervision	01MAY07A	30SEP08	LOE	31,832.46
145XSPRV-A	Winding Engineering oversight and supervision	01NOV07A	29AUG08	LOE	56,904.69
Job: 1459 - Mod Coil Fabr.Punch List-CHRZANOWSKI					
Punchlist Tech shop/RESA					
PLTS-B5	Grinding -B5	01MAY08A	30JUL08	0	9,476.40
PLTS-A6	Grinding -A6	01MAY08A	29AUG08	20	3,095.62
PLTS-B6	Grinding -B6	01MAY08A	29AUG08	0	9,476.40
PLTS-C6	Grinding & Drill Holes -C6	01MAY08A	29AUG08	23	14,593.66

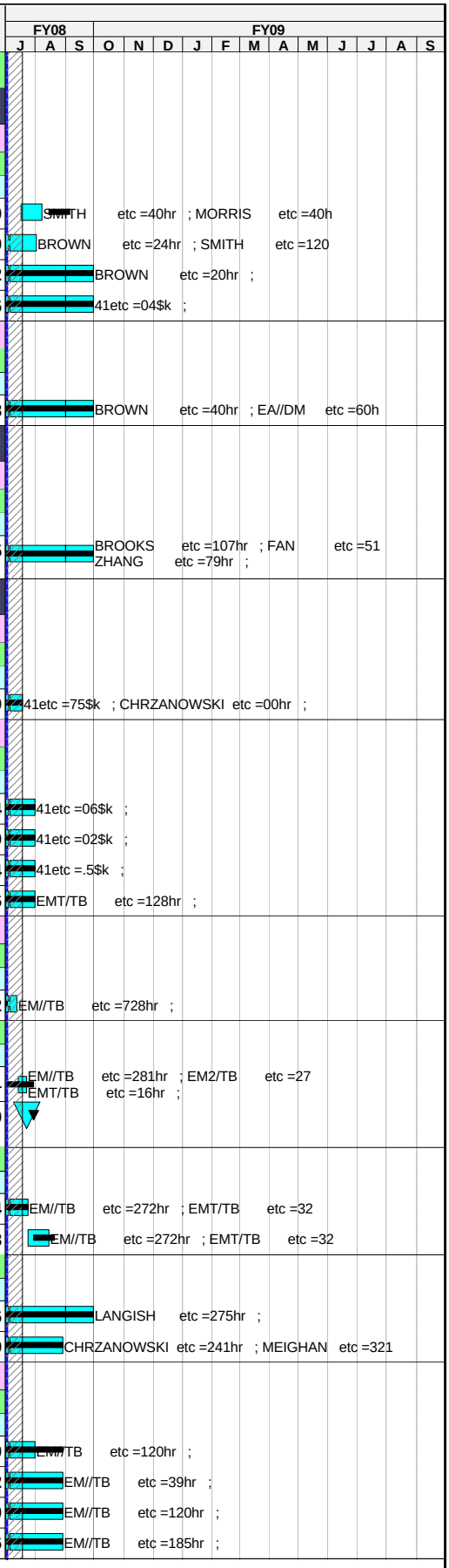

Run Date 18JUL08 11:13

© Primavera Systems, Inc.

FORECAST SCHEDULE
x target
Progress Bar
Critical Activity

080A

NCSX
MIE CLOSEOUT PLAN
July 16 status

Activity ID	Activity Description	Forecast Start	Forecast Finish	% cmplt	ETC
Punchlist- Coil Technicians					
PLCT-A6	Insul,measure,TC,SG other punch list-A6	01OCT07A	31JUL08	36	10,411.40
PLCT-B6	Insul,measure,TC,SG other punch list-B6	01OCT07A	31JUL08	36	10,411.40
Cole					
Job: 1416 - Mod Coil Type AB Fnl Dsn-COLE					
Analysis and closeout documentation					
1416-601	Prepare EM and structural analysis of leads	31JAN08A	30JUL08	70	9,966.00
1416-650	Prepare cooling analysis of lead area	01JUL08	30JUL08		3,020.00
ECN Modifications					
1416-810	Process completed ECN's 5397,5379,5380	28JUL08*	30JUL08		0.00
Job: 1421 - Mod Coil Interface Design-COLE					
Inboard Interface-CC					
1421-3155	Resolve C-C shim FDR comments	01JUL08*	23JUL08	80	3,624.00
1421-9000	Perform shear test	01JUL08*	30JUL08	80	6,342.00
Job: 1901 - Stellarator Core Mngtt&Integr-COLE					
191 - Stellarator Core Management & Oversight					
1901-08	WBS 191 FY08	01OCT07A	29SEP08	LOE	24,323.08
1901-9000	Update drawing tree	01OCT07A	29SEP08	LOE	24,160.00
192 - Stellarator Core Integr & Global Analysis					
1902-08	WBS 192 FY08	01OCT07A	29SEP08	LOE	57,388.46
Job: 1806 - FP Assembly specs and drawings-COLE					
Station 3-Modular Coil to VVSA Assembly					
1803-301	Station 3 Assembly Specification	02JUL07A	28JUL08	80	7,248.00
1803-305	Station 3 Assembly Drawings	02JUL07A	29JUL08	80	4,832.00
Dahlgren					
Job: 1501 - Coil Structures Design-DAHLGREN					
1501-533F	Integrated Stress Analysis	01OCT07A	11JUL08	95	6,021.40
1501-536	Issue dwgs for review		30JUN08*		0.00
1501-537	FDR Prep	01JUL08	31JUL08		12,370.68
1501-541	Coil Support Structures - FDR		31JUL08		0.00
Dudek					
Job: 1431 - Mod. Coil Interface Hardware-DUDEK					
Shims-Inboard					
1431-110	Complete PE007677 with white engr incl rework	01JUL08	29JUL08		12,705.66
Ellis					
Job: 8205 - Dimensional Control Coordin-ELLIS					
Station 3-Modular Coil to VVSA Assembly					
METFY08R	Support FPA Station 2	01FEB08A	30SEP08	LOE	11,196.98
STAT3 PREP	Station 3 preparations	30JUN08A	02SEP08	10	12,751.20
Harris					
Job: 8102 - NCSX MIE Management ORNL-HARRIS					
810.105XX	Project Management Office ORNL FY08 (LOE)	01FEB08A	29SEP08	LOE	75,467.11
810.105Z	Project Management Office ORNL FY09 (LOE)	01OCT08*	31MAR09	LOE	35,930.73

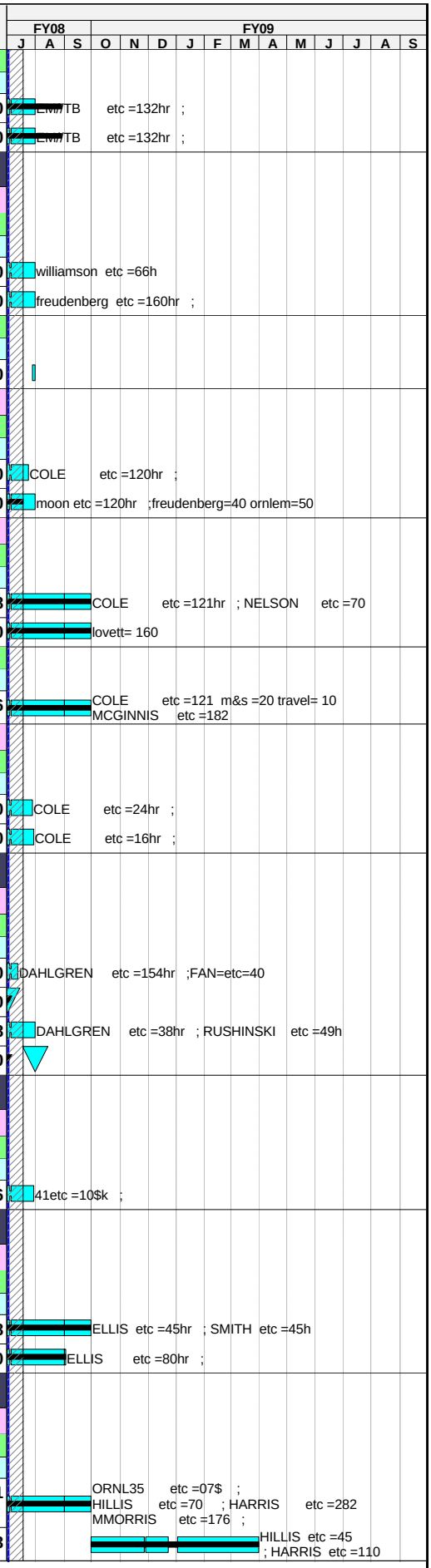

Activity ID	Activity Description	Forecast Start	Forecast Finish	% cmplt	ETC
Heitzenroeder					
Job: 8202 - Engr Mgmt & Sys Eng Sprt-HEITZENROED					
8205DC	**document control & admin support**	01FEB08A	31MAR09	LOE	**21,307.22**
8205FY08.2	**Engr mgt & systems engr FY08**	01FEB08A	30SEP08	LOE	**136,471.75**
8205FY09	**Engr mgt & systems engr FY09**	01OCT08*	31MAR09	LOE	**157,899.44**
Job: 8221 -Documentation Closeout-HEITZENROEDER					
Closeout Documentation					
8221-100	**Technical data collection**	14JUL08*	12NOV08		**629,463.19**
8221-251	**Tech presentation/paper collection**	14JUL08*	09OCT08		**9,966.00**
8221-301	**Guidance to collect data**	02JUN08A	29SEP08		**39,847.50**
8221-305	**Organizing and posting data**	30SEP08	27MAR09		**56,203.18**
8221-401	**Finalizing and archiving key analyses/reports**	14JUL08*	09OCT08		**138,362.12**
8221-501	**dell server, software, setup (non project cost**	14JUL08*	09OCT08		**0.00**
8221-555	**Comp. div support of web (non project cost)**	14JUL08*	09OCT08		**0.00**
8221-575	**Archiving doc & files in ops center**	14JUL08*	26MAR09		**18,108.37**
8221-700	**As-built Drawing Updates**	01JUL08*	23DEC08		**232,562.06**
Kalish					
Job: 1361 - TF Fabrication-KALISH					
TF Title III and Fabrication Oversight					
131-033C	**Title III engr,inspection, support**	02JAN08A	18SEP08	LOE	**28,562.95**
TF Fabrication Contract					
1361C-115	**Fab, Test & Deliver Coil #15**	17JUL08*	31JUL08		**47,220.00**
1361C-116	**Fab, Test & Deliver Coil #16**	22AUG08*	22AUG08		**47,220.00**
1361C-117	**Fab, Test & Deliver Coil #17**	16SEP08*	16SEP08		**47,220.00**
1361C-118	**Fab, Test & Deliver Coil #18**	08OCT08*	08OCT08		**47,220.00**
1351-195X	**ALL TF COILS DELIVERED**		08OCT08		**0.00**
Job: 1354 - Trim Coil Design &Procurement-KALISH					
Trim Coil **Updated estimate**					
TRIM-170	**Complete Trim Coil Detailed Drawings**	25MAR08A	25JUL08	95	**7,025.84**
TRIM-200	**Assy drawings & parts list**	01APR08A	25JUL08	95	**9,988.86**
Neilson					
Job: 8222 - Manuscripts and Papers - NEILSON					
Prepare Closeout report					
8222-900	**Manuscripts, journal & papers (40 papers@40hrs)**	02SEP08*	31MAR09		**299,600.15**

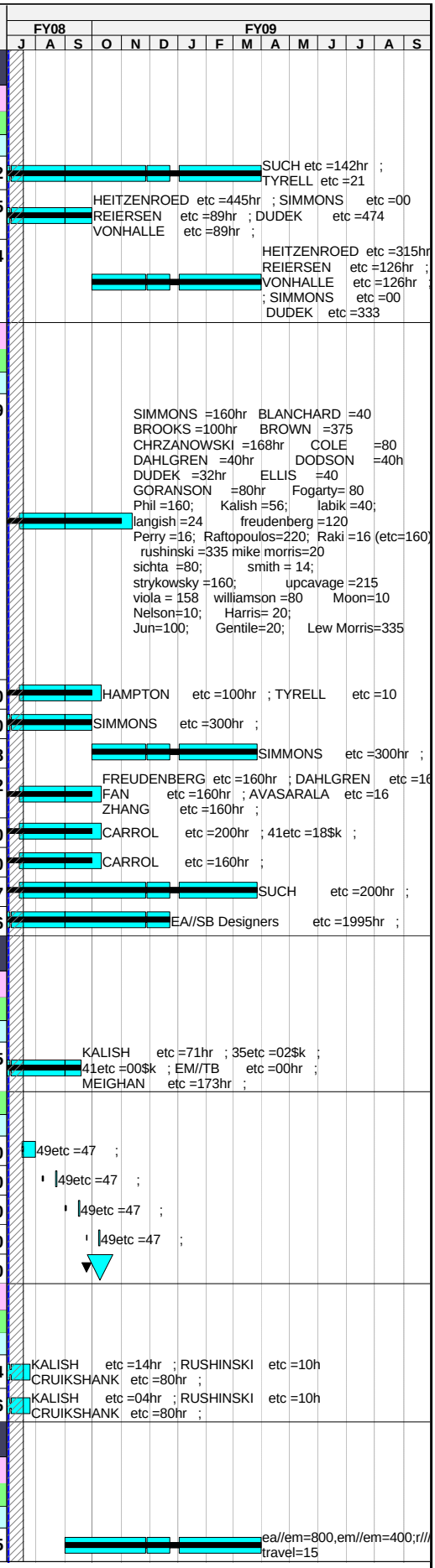

Perry

Job: 8220 - Equipt Save & Facility Restora-PERRY

Safe and store NCSX hardware assets

Activity ID	Activity Description	Forecast Start	Forecast Finish	% cmplt	ETC
8220-201	Coordination and oversight	01JUL08	30JAN09		60,636.94
8220-205	NCTC floor penetrations & PLT water hdr removal	30JUN08A	12AUG08	10	50,623.69
8220-209	Secure platform parts from CAS Bldg to NCTC	13AUG08	26AUG08		4,163.16
8220-223	Items f/TFTR bsmnt (incl spare MC cond) to NCTCB	01AUG08*	14AUG08		13,831.24
8220-227	Portable AC units to Dsite crib	27AUG08	03SEP08		631.76
8220-231	Drawing closeouts and field follow-up	01OCT08*	23DEC08		27,614.00
8220-235	Large and Small shield block to Dsite pad	02SEP08*	15SEP08		2,527.04
8220-239	Machine mock-up to NCTC	13AUG08	19AUG08		631.76
8220-243	Welding machines to RESA	01OCT08*	07OCT08		668.56
8220-247	Tools to Csite crib	01OCT08*	14OCT08		2,674.24
8220-251	Measuring Equipment to MU Shop	01OCT08*	07OCT08		1,337.12
8220-255	Inventory parts,material, tools to new location	01OCT08*	28OCT08		6,685.60
8220-409	Crates,cabinets,parts shelves f/TFTRTC to NCTCB	01OCT08*	14OCT08		10,362.68
8220-415	Coil winding station to NCTC	13AUG08	26AUG08		5,054.08
8220-419	MC bolts (incl crate) to NCTCB	09SEP08	15SEP08		2,076.20
8220-427	Assemble 4 remaining MC 3 packs	04AUG08	08SEP08		25,270.40
8220-431	Transport MC 3 packs (6) to NCTC	09SEP08	22SEP08		5,302.48
8220-501	Autoclave- Safe all AC power	23JUL08	29JUL08		3,762.80
8220-505	Autoclave-Removal and store Dsite pad & NCTCB	01OCT08*	23DEC08		154,843.44
8220-901	VV Diagnostic parts incl fab crates to NCTCB	09SEP08*	15SEP08		1,669.86
8220-903	Move tool crib from C-site back to D-Site	09SEP08*	15SEP08		9,476.40
8220-605	VV Spool piece crates to NCTCB	01JUL08*	02JUL08		473.82
8220-423	VVSA's (incl port extension crates) to NCTC	13AUG08	26AUG08		7,176.24
8220-609	Yellow wedge stands to NCTC	01OCT08*	02OCT08		334.28
8220-613	Wedge cover plates to NCTC	01OCT08*	02OCT08		334.28
8220-617	5 ton lift beam to RESA	01OCT08*	02OCT08		334.28
8220-621	14 ton lift beam to RESA	01OCT08*	02OCT08		167.14
8220-625	Remove coil winding rooms & dispose	02JUN08A	02SEP08	60	27,686.40
8220-633	Equipment in MU machine shop-Electrical to RESA	02SEP08*	29SEP08		11,536.00
8220-641	Equipment in MU machine shop-Mechanical to RESA	02SEP08*	15SEP08		12,635.20
8220-653	Cryo pump skid- Mechanical to NCTCB	02JUL08*	28JUL08		3,790.56
8220-657	Cryostat-disposal	29JUL08	11AUG08		3,790.56
8220-661	Interlocked cryo room-leave in place	01JUL08*	01JUL08		0.00
8220-665	Spherical bearings (Dahlgren) to NCTCB	02JUL08*	03JUL08		78.97
8220-669	Prototype castings to NCTC	13AUG08	14AUG08		631.76
8220-673	Prototype VV cross sections-Scrap	22SEP08*	23SEP08		157.94
8220-677	TF coil fabrication fixtures to NCTC-VPI fixture	13AUG08	14AUG08		315.88
8220-681	TF coil fabrication fixtures to NCTC-Mandrel	13AUG08	14AUG08		315.88
8220-685	TF coil fabrication fixtures to NCTC-Misc fixtur	13AUG08	14AUG08		315.88

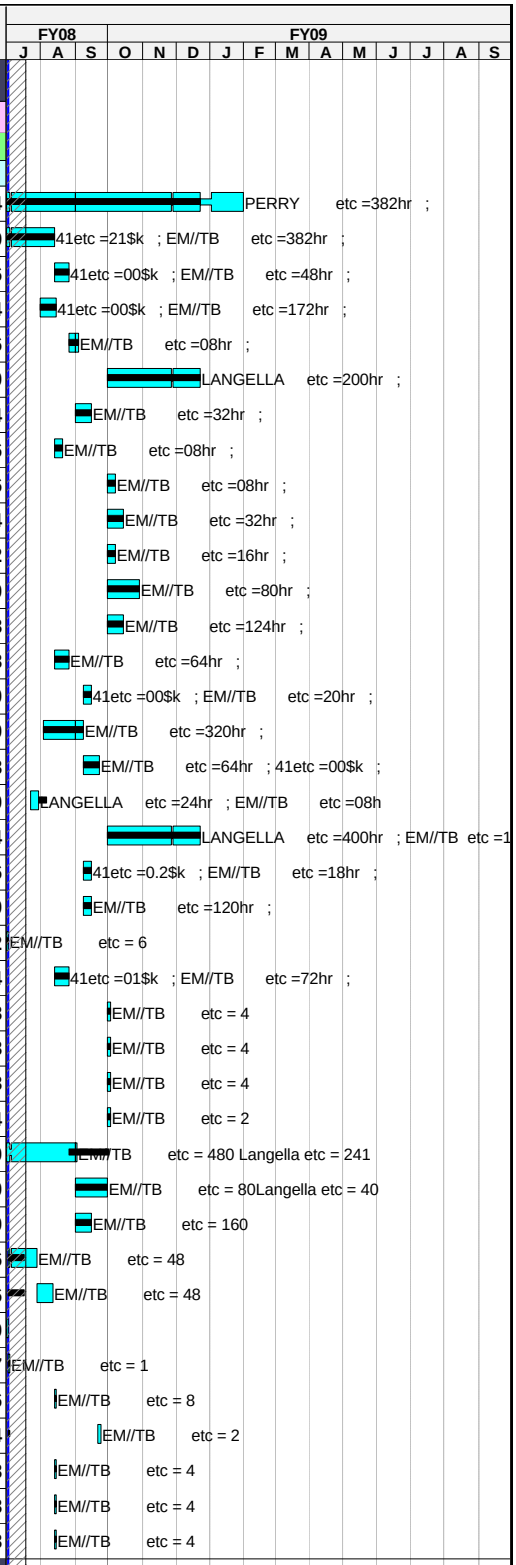

Rej

Job: 8101 - Project Management &Control-REJ

810.900	Project Management Office PPPL FY08 (LOE)	01OCT07A	30SEP08	LOE	153,091.69
810.9005A	Project Management Office PPPL fy08 etc	02JUN08A	30SEP08	LOE	94,580.00
810.901	Project Management Office PPPL FY09 (SA LOE)	01OCT08*	31MAR09	LOE	290,785.02

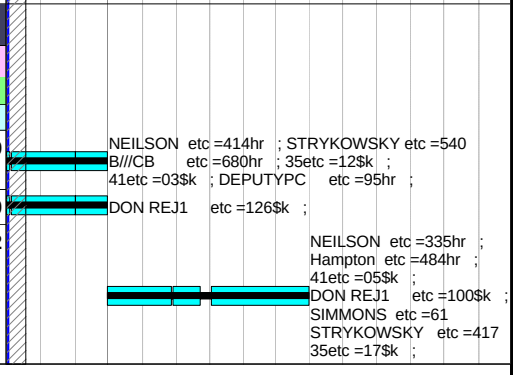

Activity ID	Activity Description	Forecast Start	Forecast Finish	% cmplt	ETC
Job: 8221 -Documentation Closeout-HEITZENROEDER					
Prepare Closeout report					
8221-604	DOE concurrence on table of contents		21JUL08*		0.00
8221-606	Final Table of contents issued		28JUL08*		0.00
8221-608	Chapter & Appendices writers assigned		28JUL08*		0.00
8221-610	Writer guidance prepared & communicated		28JUL08*		0.00
8221-612	Chapter outlines finalized		29AUG08*		0.00
8221-614	Chapter Draftes complete		30SEP08*		0.00
8221-616	Chapter Draft reviews complete		15OCT08*		0.00
8221-618	Chapters Complete		17NOV08*		0.00
8221-636	Executive summary complete		05DEC08*		0.00
8221-639	Draft Report complete		05JAN09*		0.00
8221-642	Report Reviews Complete		02FEB09*		0.00
8221-646	DOE Concurrence		02MAR09*		0.00
8221-649	Final Report Issued		31MAR09*		0.00
8221-655	Submit NEPA form		18JUL08*		0.00
Strykowsky					
Job: 8998 - Allocations-STRYKOWSKY					
99.08	PPPL Allocations FY08 LOE	01OCT07A	29SEP08	LOE	106,859.48
99.09C	PPPL Allocations FY09 LOE	01OCT08*	31MAR09	LOE	59,465.00
Viola					
Job: 1802 - FP Assy Oversight&Support-VIOLA					
Oversight and Supervision					
1802ORNL02	ORNL Title III field period assy station 2/3	02JUN08A	30SEP08	LOE	10,436.58
R1802-003	Metrology Engr Super FY08	01OCT07A	30SEP08	LOE	33,974.62
R1802-007	FPA Management FY08	01OCT07A	30SEP08	LOE	64,563.00
R1802-009	PU Title III support	02JUN08A	30SEP08	LOE	47,244.29
R1802-010	Drexel co-op student support	02JUN08A	31JUL08	LOE	1,290.30
R1802-015	HP Coverage in the TFTR TC LOE FY08	01OCT07A	30SEP08	LOE	40,024.41
R1802-016	HP Coverage in the TFTR TC LOE FY09	01OCT08*	23DEC08	LOE	36,276.45
1802MISC	Misc materials,tools, GSA vehicle,rigging	01FEB08A	30SEP08	LOE	42,029.28
Station 3 procedures,JHA,ACC,Training,Prep					
R1802-309	JHA completed	30JUL08	06AUG08		0.00
R1802-315	Pre-job brief completed	07AUG08	14AUG08		0.00
R1802-320	Update FPA cost estimate for FPA station 2&3	10SEP08	16SEP08		0.00
Job: 1810 - Field Period AssyStation 1,2,3 VIOLA					
General Assy Support					
R1810-003	LOE Crane support, fixture setupfor FY08	01OCT07A	30SEP08	LOE	41,868.31
R1810-025	Crane & Rigging inspections	01FEB08A	30SEP08	LOE	2,969.27
R1810-007	LOE Field Supervision for FY08	01OCT07A	30SEP08	LOE	59,509.70
R1810-2001	Misc Hardware and hardware rework (1/2 fte loe)	01FEB08A	30SEP08	LOE	17,815.63
S21-4.02	Perform routine metrology set-up and checks (loe	01FEB08A	30SEP08	LOE	45,942.88
Setup					
R1810-2034	Misc Tool and Hardware	02JUN08A	30SEP08	LOE	14,022.18
Pre-Measuring and fitup checks					
Pre measurement of MCHP A2,B2,C2 flanges					
2-2-2.99	Drill Stycast fill holes C2	01JUL08*	03JUL08		9,476.40
Station 2 MC subassy A1B1C1					
Stycast shim bags & final measurements					
2-1-8.01	Fill all wing bladders & cure	16JUL08A	23JUL08	70	1,137.17
2-1-11.04	Measure bolt length on all tension fasteners	24JUL08	24JUL08		1,895.28

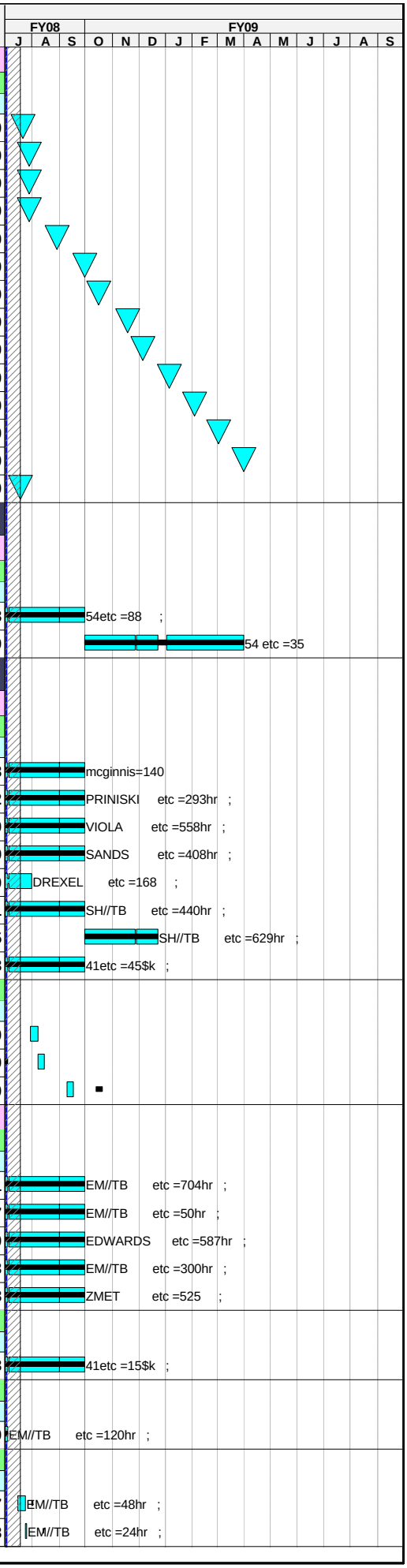

Activity ID	Activity Description	Forecast Start	Forecast Finish	% cmplt	ETC
2-1-11.05	Perform Electrical Megger test on each coil	25JUL08	28JUL08		3,790.56
2-1-11.06	Mark part for identification	29JUL08	28JUL08		0.00
2-1-11.07	Install lift support beams	29JUL08	30JUL08		7,581.12
2-1-11.08	Remove from stand & measure weight of completed	31JUL08	31JUL08		3,790.56
2-1-11.09	Move to holding area.	01AUG08	04AUG08		7,581.12
S21-11.07M	Complete 1st MCHP Assy (Sta 2)		04AUG08		0.00
2-1-11.10	Lift upper wedge & reinstall & grout at Assembly	05AUG08	18AUG08		18,952.80
Station 2 MC subassy A2B2C2					
AB-C MC Assembly					
2-2-7.01	lift (A-B) coil, along with fixture, onto anot	02JUL08*	02JUL08		9,476.40
2-2-7.02	Select a subset of monuments for initial alignm	03JUL08	03JUL08		1,861.92
2-2-7.03	Align set of monuments selected in 7.02.	07JUL08	07JUL08		1,861.92
2-2-7.04	Establish a set of global monuments	08JUL08	08JUL08		1,861.92
2-2-7.05	Mark nose shim locations & puck locations.	09JUL08	09JUL08		1,579.40
2-2-7.06	Place initial set shims (4-8) on Type-B	10JUL08	09JUL08		0.00
2-2-7.08	Lower mating "C" coil into position.	10JUL08	10JUL08		3,158.80
2-2-7.081	Perform alignment "C" coil tooling balls	11JUL08	11JUL08		1,861.92
2-2-7.09	Install jack screws & dial indicators	14JUL08	14JUL08		1,579.40
2-2-7.10	Position coil within ±.002"	15JUL08	15JUL08		1,579.40
2-2-7.11	Install shims studs, & "wiggle"	16JUL08	16JUL08		2,369.10
2-2-7.12	Torque50% of final value.	17JUL08	17JUL08		789.70
2-2-7.13	Measure position of all monuments	18JUL08	18JUL08		2,792.88
2-2-7.14	Measure shim puck height	21JUL08	21JUL08		1,579.40
2-2-7.15	remove puck locating rings & install all nose s	22JUL08	22JUL08		4,738.20
2-2-7.16	"Lightly" tack weld nose flex shims	23JUL08	23JUL08		789.70
2-2-7.17	remove "C" coil & place it on a separate fixtur	24JUL08	24JUL08		3,158.80
2-2-7.18	Recheck part alignment & weld all Type-B flex s	25JUL08	25JUL08		5,585.76
2-2-7.19	After welding "B" coil nose shims recheck align	28JUL08	28JUL08		1,861.92
2-2-7.20	Back office assessment of part after weld	29JUL08	29JUL08		3,723.84
2-2-7.21	Measure "C" fiducials	29JUL08	29JUL08		1,861.92
2-2-7.22	Weld all Type-C (A-flange) flex shims plasma sid	30JUL08	30JUL08		3,158.80
2-2-7.23	After welding determine metrology acceptance	31JUL08	31JUL08		1,861.92
2-2-7.24	Back office assessment	01AUG08	01AUG08		3,723.84
2-2-7.25	Remove shims for alignment mating coil	04AUG08	01AUG08		0.00
2-2-7.07	Place unfilled shim bags in wing areas	04AUG08	04AUG08		1,579.40
2-2-7.26	Lower mating "C" coil into position.	05AUG08	05AUG08		3,158.80
2-2-7.261	alignment "C" coil tooling balls	06AUG08	06AUG08		1,861.92
2-2-7.27	position coil accurately in x, y, & z directio	07AUG08	07AUG08		1,579.40
2-2-7.28	Install shims;studs,, & "wiggle"	08AUG08	08AUG08		2,369.10
2-2-7.29	Torque50% of final value.	11AUG08	11AUG08		789.70
2-2-7.30	Measure position of all monuments	12AUG08	12AUG08		2,792.88
2-2-7.31	Adjust shims locally. Re-torque all studs50%.	13AUG08	13AUG08		3,158.80
2-2-7.32	Install bushing. Replace nut & tighten back50%	14AUG08	14AUG08		4,738.20
2-2-7.33	After super bolt tightening, measure position	15AUG08	15AUG08		2,792.88
2-2-7.34	Tighten all bolts to final torque.	18AUG08	18AUG08		1,579.40
2-2-7.35	After tightening hardware, meas position of monu	19AUG08	19AUG08		2,792.88
2-2-7.36	Weld B / C nose region solenoid side	20AUG08	20AUG08		4,738.20
2-2-7.37	Measure positions of all monuments	21AUG08	21AUG08		1,861.92
2-2-7.38	Back office of above results & INSTALL wing supp	22AUG08	22AUG08		3,723.84
2-2-7.39	Fill all lose bushings with Stycast 2850FT	25AUG08	25AUG08		3,158.80
Stycast shim bags & final measurements					
2-2-8.01	Fill all wing bladders & cure	26AUG08	27AUG08		3,158.80
2-2-8.02	Inject stycast in all shim spaces	28AUG08	29AUG08		3,158.80
2-2-10.0	Complete local service & interface details	02SEP08	29AUG08		0.00
2-2-11.01	Measure tooling balls on all coils.	02SEP08	03SEP08		3,723.84

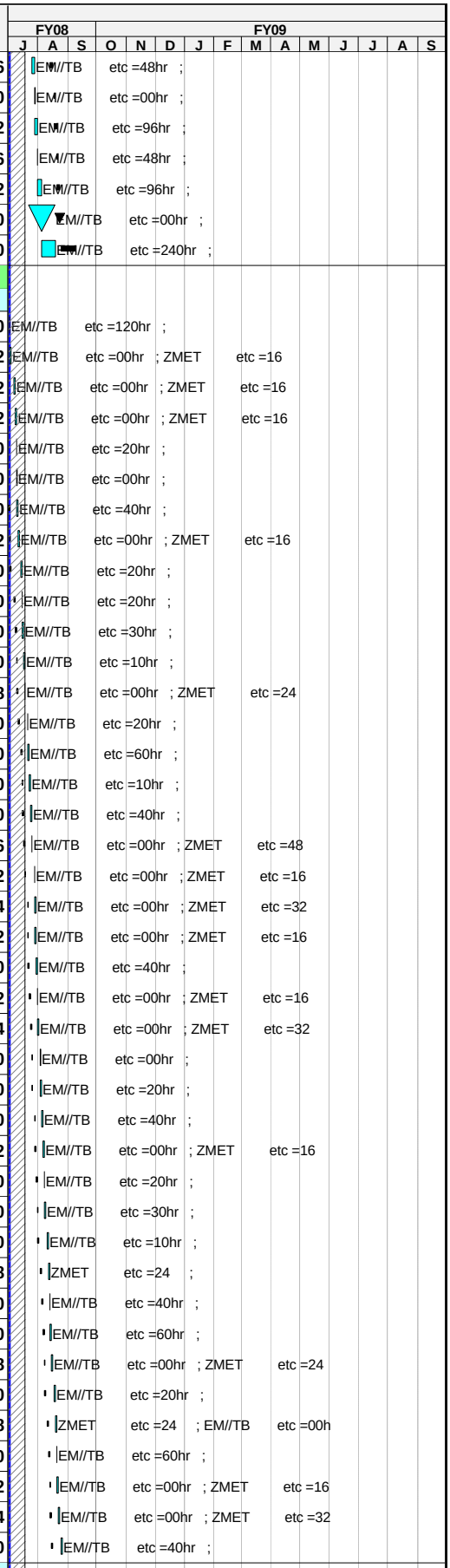
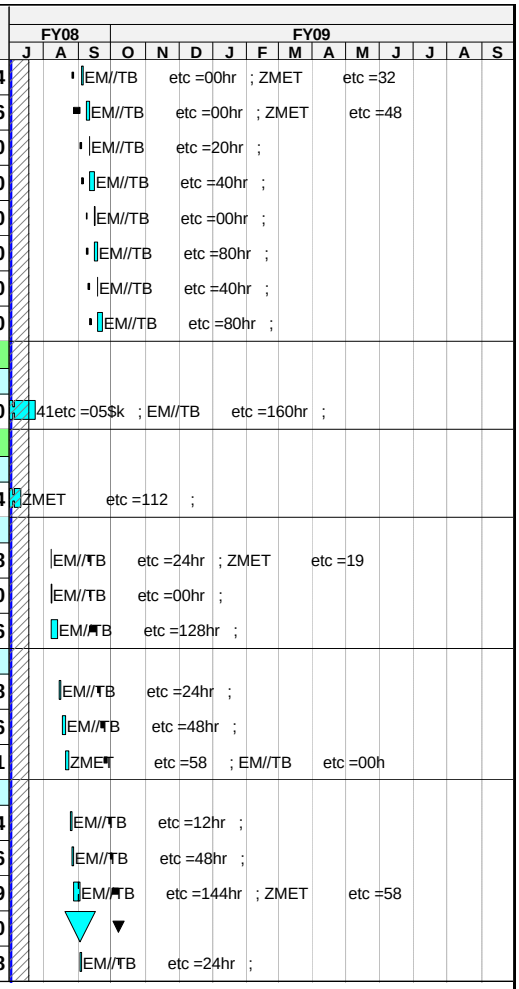
Activity ID	Activity Description	Forecast Start	Forecast Finish	% cmplt	ETC
2-2-11.02	Install or identify three primary fiducials	04SEP08	05SEP08		3,723.84
2-2-11.03	Scan "B" flange Type-C coil & interfacing base	08SEP08	10SEP08		5,585.76
2-2-11.04	Measure bolt length on all tension fasteners	11SEP08	11SEP08		1,579.40
2-2-11.05	Perform Electrical Megger test on each coil	12SEP08	15SEP08		3,158.80
2-2-11.06	Mark part for identification	16SEP08	15SEP08		0.00
2-2-11.07	Install lift support beams	16SEP08	17SEP08		6,317.60
2-2-11.08	Remove from stand & measure weight of completed	18SEP08	18SEP08		3,158.80
2-2-11.09	Move to holding area.	19SEP08	22SEP08		6,317.60
Station 3 Setup/Preparations/General					
Misc Prep activities					
R1810-3113	Procure wire rope slings & 6 17ton shackles	01JUL08A	23JUL08	50	18,845.20
Station 3-Assemble Mod Coils and VVSA-FP#1					
Set-up and Prep					
3-1-1.01	transfer CAD models	01JUL08*	10JUL08		13,033.44
Install Laser Screen					
3-1-6.03	Turn each lasers on & measure each laser source	07AUG08*	07AUG08		4,129.58
3-1-6.04	Print path on milar paper	08AUG08	07AUG08		0.00
3-1-6NEW	Dry-run MCHP thru laser screen path without VVSA	08AUG08	13AUG08		10,108.16
Install Vacuum Vessel					
3-1-7.03	Install VVSA to base support and make connection	15AUG08	15AUG08		1,895.28
3-1-7.04	take tooling ball readings and secure VVSA	18AUG08	19AUG08		3,790.56
3-1-7.05	Scan VV surface and compare data	20AUG08	22AUG08		6,702.91
Trial fit MCHP over VV					
3-1-8.01	Install any bumper protection components on the	25AUG08	25AUG08		947.64
3-1-8.03	Install MCHP lift fixture, disengage leveler	26AUG08	27AUG08		3,790.56
3-1-8.05	Move right MCHP over the VV	28AUG08	02SEP08		18,074.59
3-1-8.05M	MCHP test fit over VVSA Complete		02SEP08		0.00
3-1-6.05	Disengage the right MCHP & position on floor	03SEP08	03SEP08		1,895.28